HPS® – High Performance Standard

MAPCO hat den „HIGH PERFORMANCE STANDARD-HPS®“ eingeführt.

Extra Stark	**anstatt**	**Extra leicht**
High end	**anstatt**	**Low Cost**
Lange Haltbarkeit	**anstatt**	**Kurzlebige Kundenzufriedenheit**

Stabilisatorstreben sind ein selbsterklärendes Beispiel für den Bedarf an Verbesserungen und hinzu eine der Produktgruppen, die dringend bearbeiten werden müssen.

HPS® - Stabilistatorstreben
HPS® - Manschetten
HPS® - Fett
HPS® - Radlagersätze
HPS® - Schutzkappen



08/2011

Katalog / catalogue
steering and suspension parts
Lenkungs- und Aufhängungsteile
pièces de direction et de suspension

Inhalt / content :	Seite / page
Symbole symboles / symbols	**004 - 005**
Fahrzeugzuordnung der Artikel - Bildteil application / affectation	**006 - 385**
Anwendungsliste - Textteil buyers guide	**386 - 500**
Vergleichslisten / OE - Nummern + Aftermarket -Crosslisten cross list / liste de correspondance	**501 - 656**

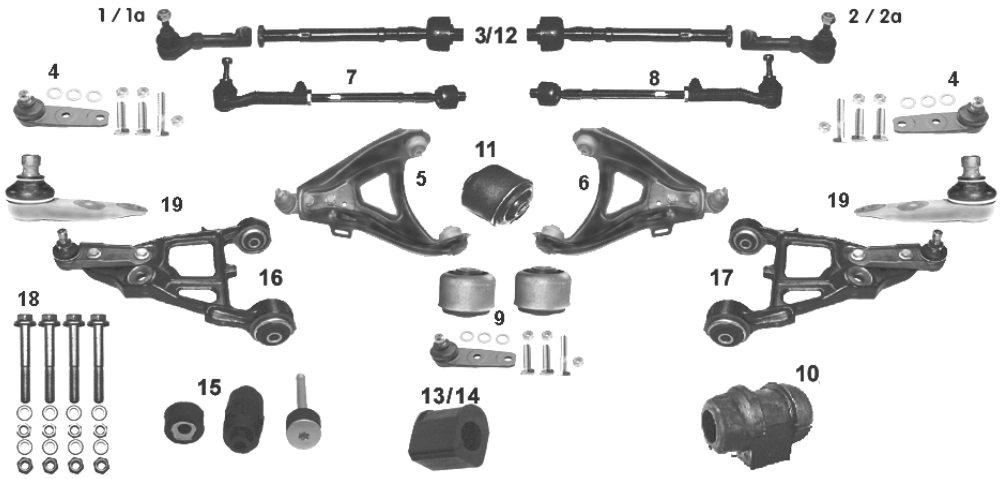

= in Fahrtrichtung links /from drivers position left	in Fahrtrichtung rechts / from drivers position right =
LHT = Linksgewinde	Rechtsgewinde = RHT

Nummernsystem / système de références / parts number system

19 ...	49 ...	51 ... 52 ...	59 ... 53...	**Lenkungs- und Achsaufhängungsteile** steering and suspension parts / pièces de direction et de suspension
19 0..	**49 0..**			ALFA ROMEO - FIAT - LADA - LANCIA
19 1..	**49 1..**			RENAULT, DACIA
19 2..	**49 2..**			TALBOT , LA-KIT`S
19 3..	**49 3..**			PEUGEOT
19 4..	**49 4..**			CITROËN
19 5..	**49 5..**	**51 5..**	**59 5..**	DAIHATSU - DAEWOO - MAZDA - MITSUBISHI - NISSAN – SUBARU - TOYOTA
19 6..	**49 6..**			AUDI - BMW - FORD - JAGUAR - OPEL - VOLKSWAGEN
19 7..	**49 7..**			AUDI - BMW - FORD - OPEL - MERCEDES BENZ - SEAT - VOLKSWAGEN
19 8..	**49 8..**	**51 8..**	**59 8..**	AUDI - BMW - FORD - OPEL - MERCEDES BENZ - SEAT - VOLKSWAGEN
19 9..	**49 9..**	**51 8..**	**59 8..**	CHRYSLER - ROVER - SAAB - SKODA - VOLVO
19 2..				Reparatursätze für Lenkerarme
33...				Buchsen für Achsträger / Lenkerarme / Stabilisatorstreben
36...				Reparatursätze für Stabilisatoren
95...				Montagesätze für Lenkerarme (Befestigungsteile)

© MAPCO Autotechnik GmbH 08/2011

Symbol						
MAPCO	kein Bild	no illustration	sans photo	Senza immagine	Без изображения	bez obrázku
←	links	left	gauche	Sinistra	Слева	levý
→	rechts	right	droit	Destra	Справа	pravý
↑	oben	upper	supérieur	Superiore	сверху	horní
↓	unten	lower	inférieur	Inferiore	внизу	spodní
	VA	Front Axle	train AV	Asse anteriore	Передный мост	přední náprava
	HA	Rear Axle	train AR	Asse posteriore	Задный мост	zadní náprava
	mit Servolenkung	power steering	direction assistée	Con servosterzo	С рулевым механизмом с усилителем	se servořízením
	ohne Servolenkung	manual steering	sans D.A.	Senza servosterzo	Без рулевого механизма с усилителем	bez servořízení
ABS	mit ABS	with ABS	avec ABS	Con ABS	С АБС	s ABS
~~ABS~~	ohne ABS	without ABS	sans ABS	Senza ABS	Без АБС	bez ABS
✓	nur	only	uniquement	Solo	только	pouze
	außer	except	excl.	Ad eccezione di	кроме	kromě
Ø	Durchmesser	Diameter	diamètre	Diametro	диаметр	průměr
	manuelles Getriebe	Manual Gear Box	BVM	Cambio manuale	Кробка передач с ручнымуправлением	manuální převodovka
	Automatikgetriebe	Automatic Gear Box	BVA	Cambio automatico	Автоматическая коробка передач	automatická převodovka
	Baujahr	year build	année de construction	Anno di costruzione	Год выпуска	Rok výroby
→xxx	bis Baujahr	to year build	jusqu'à année de construction	Fino all´anno	До года выпуска	do roku výroby
xxx→	ab Baujahr	from year build	à. p. année de construction	A parire dall´anno	С года выпуска	od roku výroby
Chassis →xxx	bis Fahrgestellnummer	up to Chassis No	jusqu'à n° de chassis	Fino a Numero di telaio	До номера шасси	do čísla karoserie
Chassis xxx→	ab Fahrgestellnummer	from Chassis No	à. p. n° de chassis	A partire da Numero di telaio	С номера шасси	od čísla karoserie
LHT	Linksgewinde	LHT	pas de vis gauche	LHT	Левая резьба	levostranný závit
RHT	Rechtsgewinde	RHT	pas de vis droite	RHT	Правая резьба	pravostranný závit
	Cabriolet	Convertible	Cabriolet	Cabriolet	кабриолет	kabriolet
	Schrägheck	Hatchback	berline 5p	2 Volumi	Легковой автомобиль-седан	hatchback
	Kombi	Estate	break	Station Wagon	Кузов универсал	kombi
	Coupe	Coupé	coupé	Coupe	Купе	coupe
	Stufenheck	Saloon	berline 4p	3 volumi	Легковой автомобиль-седан с багажником	sedan
	Lieferwagen	Light Commercial Vehicles	véhicule utilitaire	Veicoli commerciali	Кузов-фургон	Lehký užitkový vůz
	verstärkte Aufhängung	reinforced suspension	suspension renforcée	Sospensione rinforzata	Усиленная подвеска	zesílené zavěšení
	erhöhte Nutzlast	high payload	charge utile augmentée	Carico elevato	Повышенный полезный груз	vyšší náklad

Symbol						
	Radgröße	wheel size	dimension de roue	Dimensione ruota	Величина колеса	velikost kola
drs	Türen	doors	portes	Porte	Двери	dveře
cyl	Zylinderzahl	no. of cylinders	cylindres	Cilindro	Количество цилиндр	počet válců
	Sportfahrwerk	Sport chassis	Châssis sport	Equipaggia mento sportivo	Спортивная подвеска	sportovní podvozek
	Reparatursatz	repair set	Nécessaire de réparation	Kit Riparazione	набор ремонта	opravná sada
	Reparatursatz Stabilisatorlager	repair set for stabilizer bar	Nécessaire de réparation de camps de stabilisateur	Kit Riparazione Stabilizzatore	Ремонтный комплект стабилизатора	opravná sada stabilizátoru
	Schrauben	screws	Vis	Vite	Болты	Srouby
	Lenkungs dämpfer	steering damper	pattes de fixations percé	ammortizzatore della direzione	Амортизатор рулевого управления	tlumič řízení

ALFA ROMEO

ALFA ROMEO 145 + 146

07/94→ 01/01

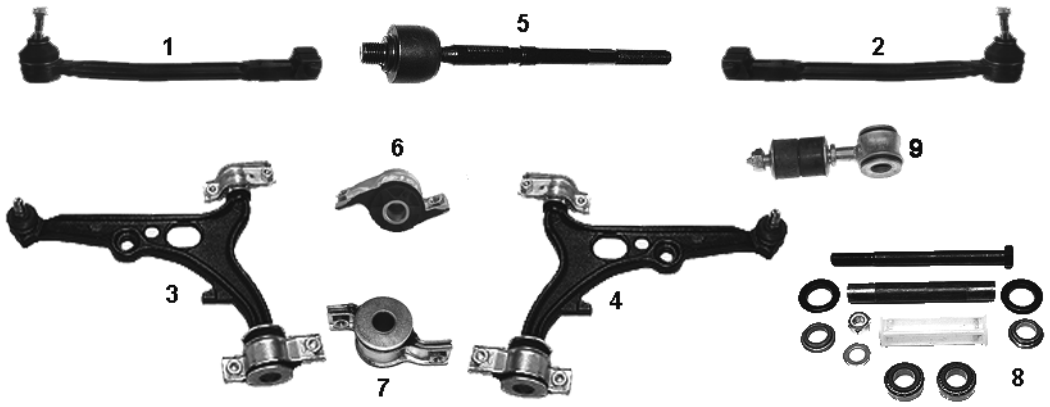

NR	MAPCO	REF								NEW	INFO
1	**19013**	60608979	✓		✓				✓	✓		M18x1,5RHT
2	**19014**	60608980	✓			✓			✓	✓		M18x1,5LHT
3	**19009**	60813013 60809813	✓		✓				✓	✓		
4	**19010**	60813014 60809814	✓			✓			✓	✓		
5	**49053**	9947718	✓		✓	✓			✓	✓		01/96→ M14x1,5RHT
6	**33019**	7601065	✓		✓				✓	✓		
7	**33035**	7601068	✓			✓			✓	✓		
8	**34054**			✓	✓	✓			✓	✓		
9	**33009**	60809242	✓		✓	✓			✓	✓		

ALFA ROMEO 147

01/01→

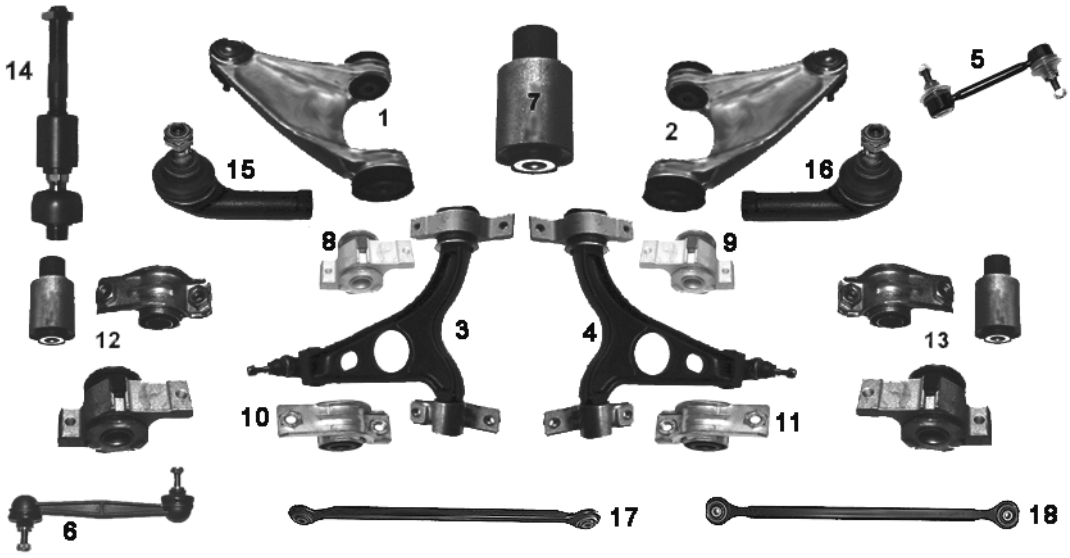

NR	MAPCO	REF								NEW	INFO
1	**49027**	6065 1939	✓		✓		✓		✓	✓		
2	**49026**	6065 1940	✓			✓	✓		✓	✓		
3	**49028**	6065 2465	✓		✓				✓	✓		
4	**49029**	6065 2466	✓			✓			✓	✓		
5	**49030HPS**	6062 5029	✓		✓	✓			✓	✓		
6	**49031**	6061 3575		✓	✓	✓			✓	✓		
7	**33007**		✓		✓	✓		✓	✓	✓		
8	**33008**		✓		✓				✓	✓		aussen/outside
9	**33010**		✓			✓			✓	✓		aussen/outside
10	**33013**		✓		✓				✓	✓		innen/inner
11	**33014**		✓			✓			✓	✓		innen/inner
12	**19231**		✓		✓			✓	✓	✓		Kit
13	**19232**		✓			✓		✓	✓	✓		Kit
14	**19018**	994 7923	✓		✓	✓			✓	✓		
15	**19029**	994 7919	✓		✓				✓	✓		
16	**19030**	994 7920	✓			✓			✓	✓		
17	**49067**	6062 9903		✓	✓	✓			✓	✓		560,0mm
18	**49068**	5174 9713		✓	✓	✓			✓	✓		595,0mm
19	**53026**		✓		✓	✓			✓	✓	✓	 **axle Kit**

ALFA ROMEO 155 1992→ 12/97

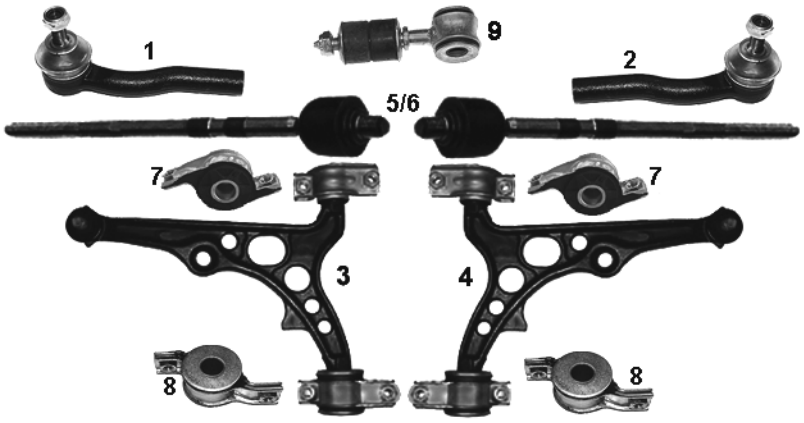

NR	MAPCO	REF			←	→	↑	↓			NEW	INFO
1	**19052**	6056 5706	✓		✓				✓	✓		M12x1,5RHT
2	**19053**	6056 5705	✓			✓			✓	✓		M12x1,5RHT
3	**19009**	6081 3013 6080 9813	✓		✓				✓	✓		
4	**19010**	6081 3014 6080 9814	✓			✓			✓	✓		
5	**19016**	994 4452	✓		✓	✓			✓			
6	**19017**	994 7361	✓		✓	✓				✓		
7	**33019**	7601065	✓		✓				✓	✓		
8	**33035**	7601068	✓			✓			✓	✓		
9	**33009**	60809242	✓		✓	✓			✓	✓		

ALFA ROMEO 156 (932) 09/97→ 05/06

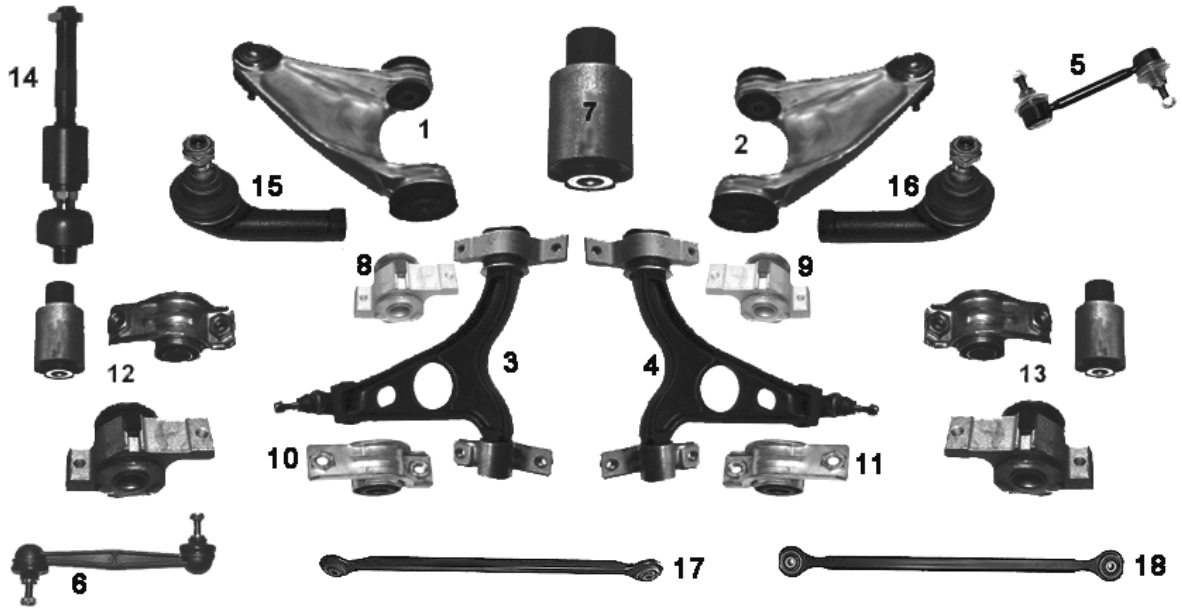

NR	MAPCO	REF								NEW	INFO
1	**49027**	6065 1939	✓		✓		✓		✓	✓		
2	**49026**	6065 1940	✓			✓	✓		✓	✓		
3	**49028**	6065 2465	✓		✓				✓	✓		
4	**49029**	6065 2466	✓			✓			✓	✓		
5	**49030HPS**	4684 3389	✓		✓	✓			✓	✓		
6	**49031**	6061 3575		✓	✓	✓			✓	✓		
7	**33007**		✓		✓	✓		✓	✓	✓		
8	**33008**		✓		✓				✓	✓		aussen/outside
9	**33010**		✓			✓			✓	✓		aussen/outside
10	**33013**		✓		✓				✓	✓		innen/inner
11	**33014**		✓			✓			✓	✓		innen/inner
12	**19231**		✓		✓			✓	✓	✓		Kit
13	**19232**		✓			✓		✓	✓	✓		Kit
14	**19018**	9947 923	✓		✓	✓			✓	✓		
15	**19029**	9947 919	✓		✓				✓	✓		
16	**19030**	9947 920	✓			✓			✓	✓		
17	**49067**	6062 9903		✓	✓	✓			✓	✓	✓	560,0mm
18	**49068**	5174 9713		✓	✓	✓			✓	✓	✓	595,0mm
19	**53026**		✓		✓	✓			✓	✓	✓	 **axle Kit**

ALFA ROMEO 159 09/05→

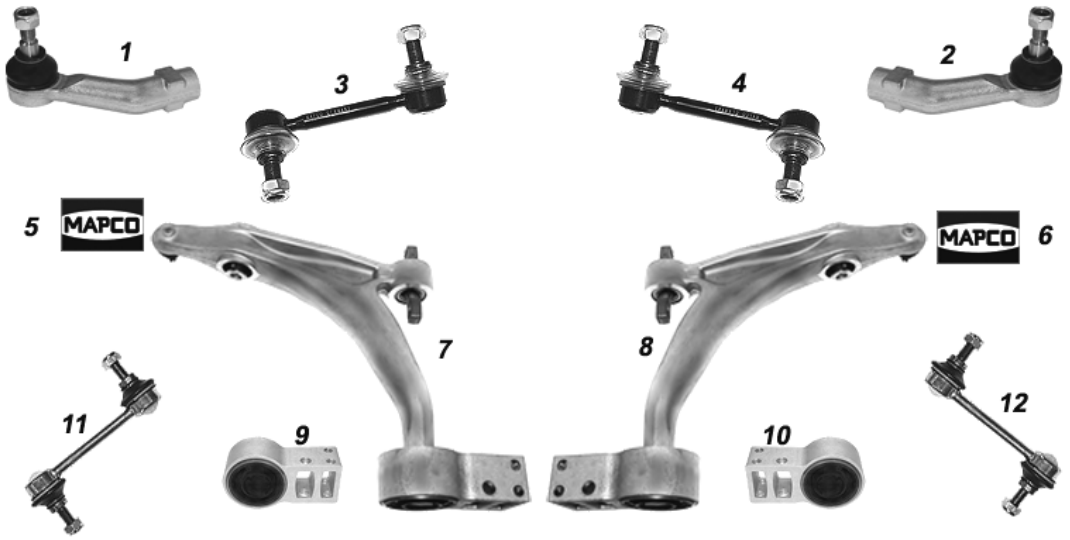

NR	MAPCO	REF			←	→	↑	↓			NEW	INFO
1	**59014**	77363706	✓		✓				✓		✓	
2	**59015**	77363707	✓			✓			✓		✓	
3	**59017**	50704361	✓		✓				✓	✓	✓	
4	**59016**	50704362	✓			✓			✓	✓	✓	
5	**59018**	50704947	✓		✓		✓		✓	✓	✓	LEA
6	**59019**	50704948	✓			✓	✓		✓	✓	✓	LEA
7	**59022**	51795447	✓		✓			✓	✓	✓	✓	
8	**59023**	51795446	✓			✓		✓	✓	✓	✓	
9	**33048**	50706954	✓		✓			✓	✓	✓	✓	
10	**33049**	50706955	✓			✓		✓	✓	✓	✓	
11	**59020**	50705702		✓	✓				✓	✓	✓	
12	**59021**	50705703		✓		✓			✓	✓	✓	

ALFA ROMEO 164 - 164TD 01/87→ 09/98

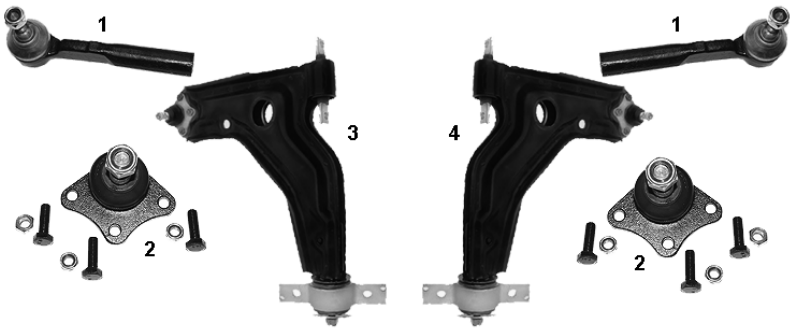

NR	MAPCO	REF			←	→	↑	↓			NEW	INFO
1	**19007**	6051 1622	✓		✓	✓			✓	✓		M14x1,5RHT
2	**19060**	8244 6499	✓		✓	✓			✓	✓		✓ 2.0 TS Ø 13 mm
2	**19008**	6051 0360	✓		✓	✓			✓	✓		Ø 15 mm
3	**19020**	6058 8843	✓		✓				✓	✓		Ø 15 mm
4	**19021**	6058 8844	✓			✓			✓	✓		Ø 15 mm

ALFA ROMEO 166 (936) 09/98→

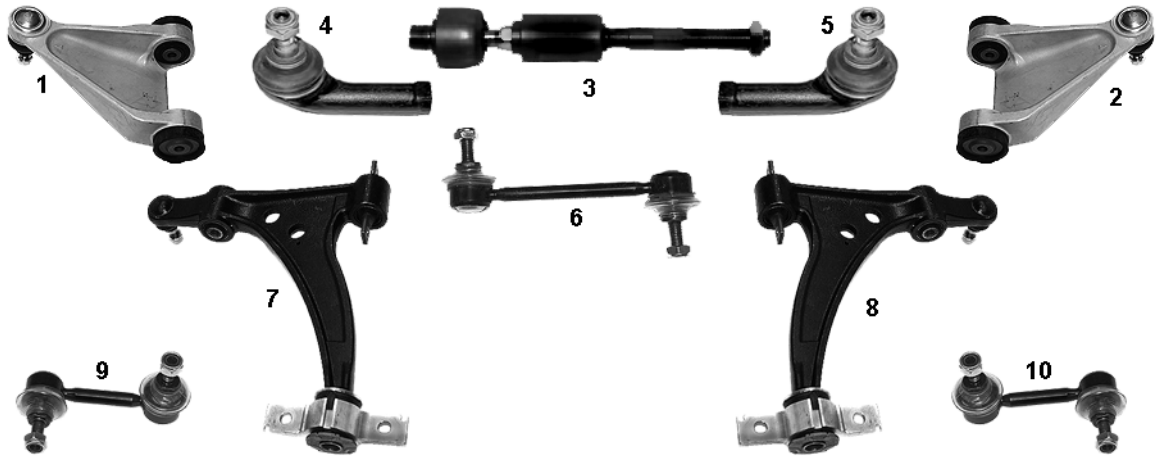

NR	MAPCO	REF								NEW	INFO
1	**49080**	6065 3551	✓		✓		✓		✓	✓		Alu
2	**49081**	6065 3552	✓			✓	✓		✓	✓		Alu
3	**19018**	9947 923	✓		✓	✓			✓	✓		
4	**19029**	9947 919	✓		✓				✓	✓		
5	**19030**	9947 920	✓			✓			✓	✓		
6	**49032HPS**	6063 0757	✓		✓	✓			✓	✓		
7	**19031**	6066 5804	✓		✓				✓	✓		
8	**19032**	6066 5805	✓			✓			✓	✓		
9	**49034**	6062 8284		✓	✓				✓	✓		
10	**49033**	6062 8255		✓		✓			✓	✓		
11	**53080**		✓		✓	✓			✓	✓	✓	 **axle Kit**

ALFA ROMEO BRERA 01/06→

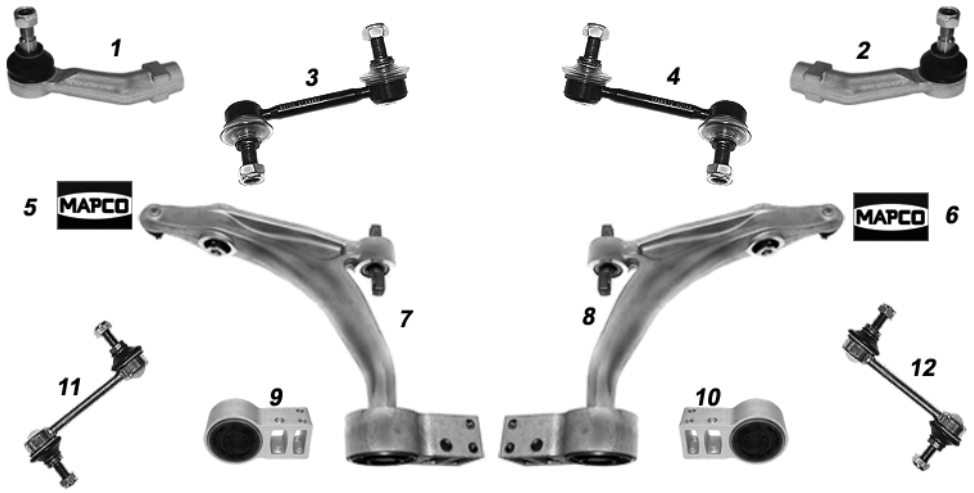

NR	MAPCO	REF								NEW	INFO
1	**59014**	77363706	✓		✓				✓		✓	
2	**59015**	77363707	✓			✓			✓		✓	
3	**59017**	50704361	✓		✓				✓	✓	✓	
4	**59016**	50704362	✓			✓			✓	✓	✓	
5	**59018**	50704947	✓		✓		✓		✓	✓	✓	LEA
6	**59019**	50704948	✓			✓	✓		✓	✓	✓	LEA
7	**59022**	51795447	✓		✓			✓	✓	✓	✓	
8	**59023**	51795446	✓			✓		✓	✓	✓	✓	
9	**33048**	50706954	✓		✓			✓	✓	✓	✓	
10	**33049**	50706955	✓			✓		✓	✓	✓	✓	
11	**59020**	50705702		✓	✓				✓	✓	✓	
12	**59021**	50705703		✓		✓			✓	✓	✓	

ALFA ROMEO GTV 05/98→

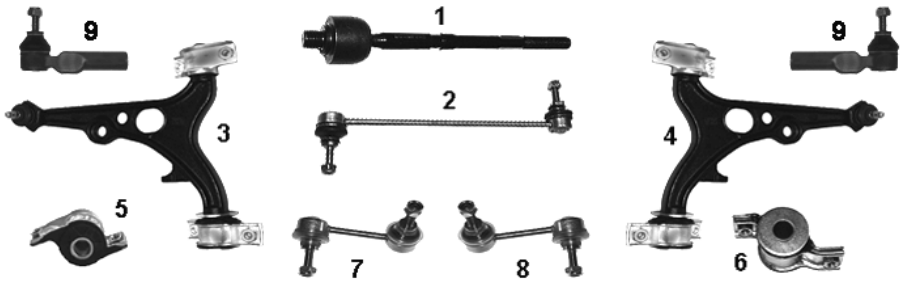

NR	MAPCO	REF								NEW	INFO
1	**49053**	9947 718	✓		✓	✓			✓	✓		M14x1,5RHT
2	**49046**	6061 4514	✓		✓	✓			✓	✓		
3	**19009**	6081 3013	✓		✓				✓	✓		
4	**19010**	6081 3014	✓			✓			✓	✓		
5	**33019**	7601 065	✓		✓				✓	✓		
6	**33035**	7601 068	✓			✓			✓	✓		
7	**49048**	6061 2436		✓	✓				✓	✓		
8	**49047**	6061 2435		✓		✓			✓	✓		
9	**19015**	9947 714	✓		✓	✓			✓	✓		

ALFA ROMEO MITO 09/08→



NR	MAPCO	REF								NEW	INFO
1	**59012**	7736 3829	✓		✓				✓	✓		
2	**59013**	7736 3830	✓			✓			✓	✓		
3	**19097**	5178 3057	✓		✓				✓	✓		
4	**19098**	5178 3056	✓			✓			✓	✓		
5	**49092**	No OE ref	✓		✓	✓			✓	✓		
6	**33044**	No OE ref	✓		✓	✓			✓	✓		
7	**33045**	No OE ref	✓		✓	✓			✓	✓		
8	**59026HPS**	5570 0753	✓		✓	✓			✓	✓	✓	

ALFA ROMEO SPIDER (916S_) 09/94→04/05

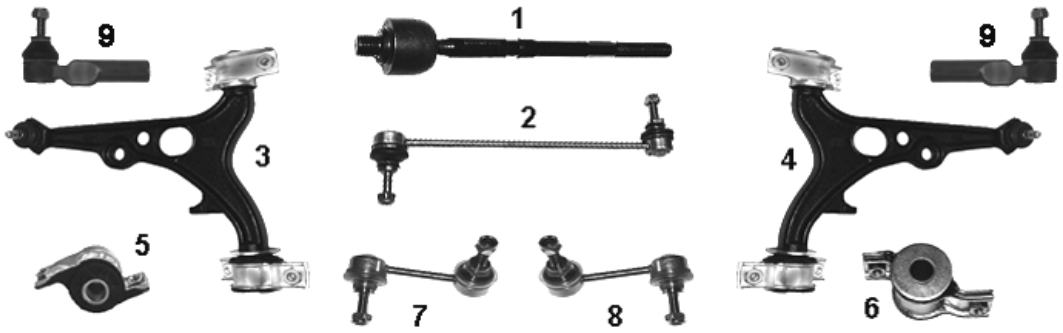

NR	MAPCO	REF								NEW	INFO
1	**49053**	9947 718	✓		✓	✓			✓	✓		M14x1,5RHT
2	**49046**	6061 4514	✓		✓	✓			✓	✓		
3	**19009**	6081 3013	✓		✓				✓	✓		
4	**19010**	6081 3014	✓			✓			✓	✓		
5	**33019**	7601 065	✓		✓				✓	✓		
6	**33035**	7601 068	✓			✓			✓	✓		
7	**49048**	6061 2436		✓	✓				✓	✓		
8	**49047**	6061 2435		✓		✓			✓	✓		
9	**19015**	9947 714	✓		✓	✓			✓	✓		

ALFA ROMEO SPIDER 09/06→

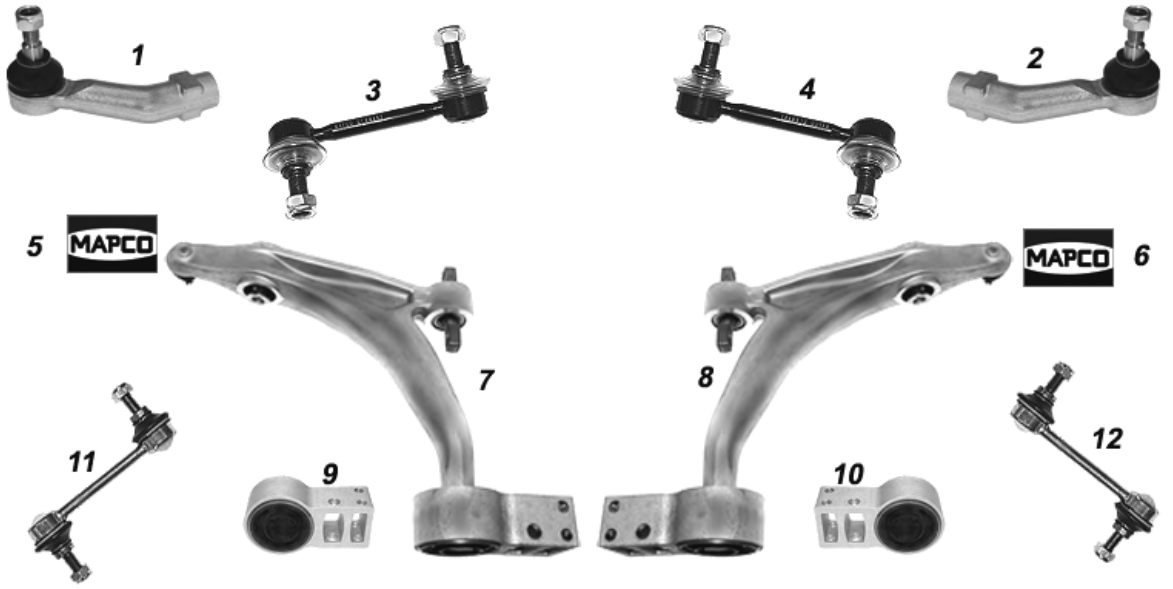

NR	MAPCO	REF										INFO
1	**59014**	77363706	✓		✓				✓		✓	
2	**59015**	77363707	✓			✓			✓		✓	
3	**59017**	50704361	✓		✓				✓	✓	✓	
4	**59016**	50704362	✓			✓			✓	✓	✓	
5	**59018**	50704947	✓		✓		✓		✓	✓	✓	LEA
6	**59019**	50704948	✓			✓	✓		✓	✓	✓	LEA
7	**59022**	51795447	✓		✓			✓	✓	✓	✓	
8	**59023**	51795446	✓			✓		✓	✓	✓	✓	
9	**33048**	50706954	✓		✓			✓	✓	✓	✓	
10	**33049**	50706955	✓			✓		✓	✓	✓	✓	
11	**59020**	50705702		✓	✓				✓	✓	✓	
12	**59021**	50705703		✓		✓			✓	✓	✓	

AUDI

AUDI 50 (86) 08/74→ 07/78

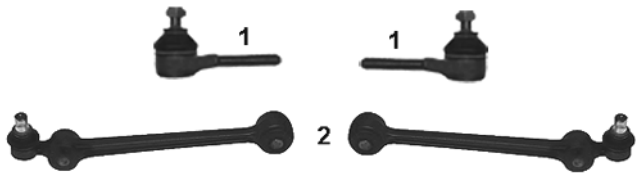

NR	MAPCO	REF								NEW	INFO
1	**19850**	811419812	✓		✓	✓			✓	✓		M14x1,5RHT
2	**19854**	861407151B	✓		✓	✓			✓	✓		

AUDI 80 (B2) 04/80→ 08/86
AUDI 90 (B2) 06/84→ 01/87

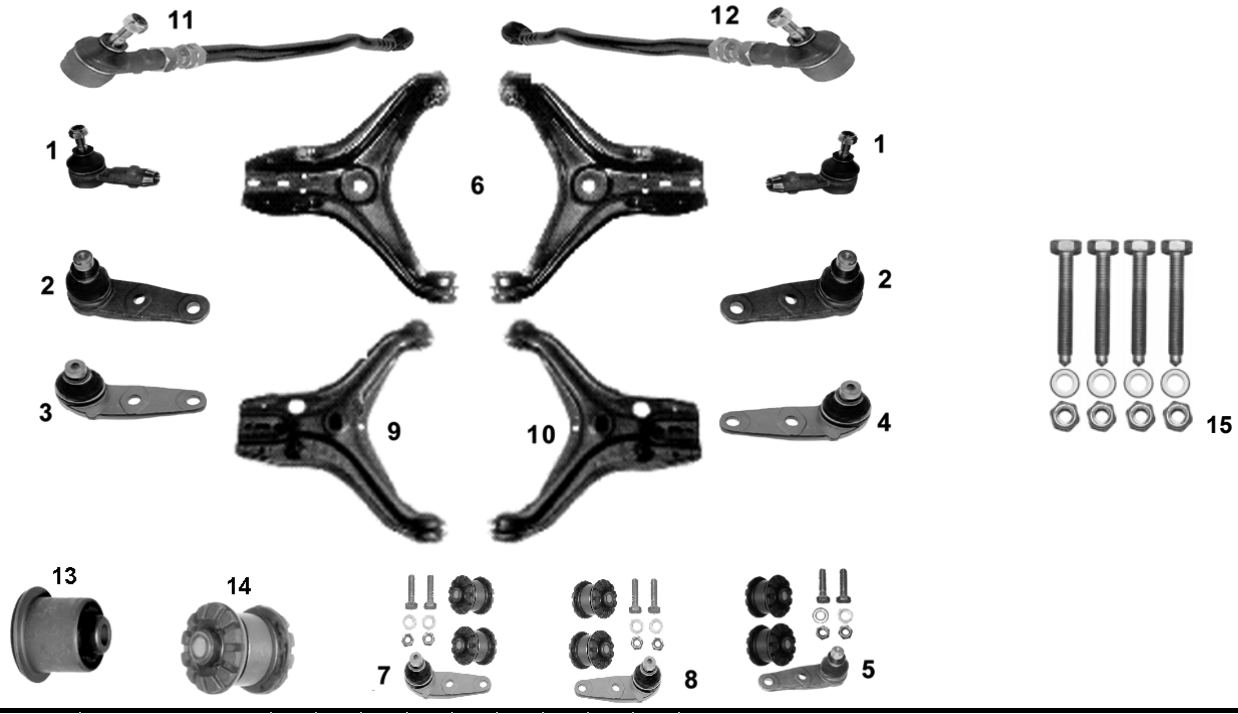

NR	MAPCO	REF								NEW	INFO
1	**19890**	811419812A	✓		✓	✓			✓	✓		M14x1,5RHT
2	**19857**	823407365E	✓		✓	✓			✓	✓		Chassis → 81-D077973 / STOP QUATTRO **Ø 17 mm**
3	**19893**	855407365A/B	✓		✓				✓			Chassis 81-D077974→ **Ø 17 mm**
4	**19894**	855407366A/B	✓			✓			✓			Chassis 81-D077974→ **Ø 17 mm**
5	**19257**		✓		✓	✓				✓		Kit → 8/86
6	**49768**	893407147G	✓		✓	✓				✓		
7	**19293**		✓		✓					✓		Kit 09/86→ 03/87
8	**19294**		✓			✓				✓		Kit 09/86→ 03/87
9	**49769**	893407147C/D	✓		✓				✓			
10	**49770**	893407148C/D	✓			✓			✓			
11	**49761**	811419801E	✓		✓				✓	✓		
12	**49762**	811419802J	✓			✓			✓	✓		
13	**33813**	857 407 181	✓		✓	✓			✓			
14	**33828**	811 407 181	✓		✓	✓				✓		
15	**95705**		✓		✓	✓			✓	✓		MS

AUDI 80 (B3)
AUDI 90 (B3)

09/86→ 07/89
09/86→ 07/89

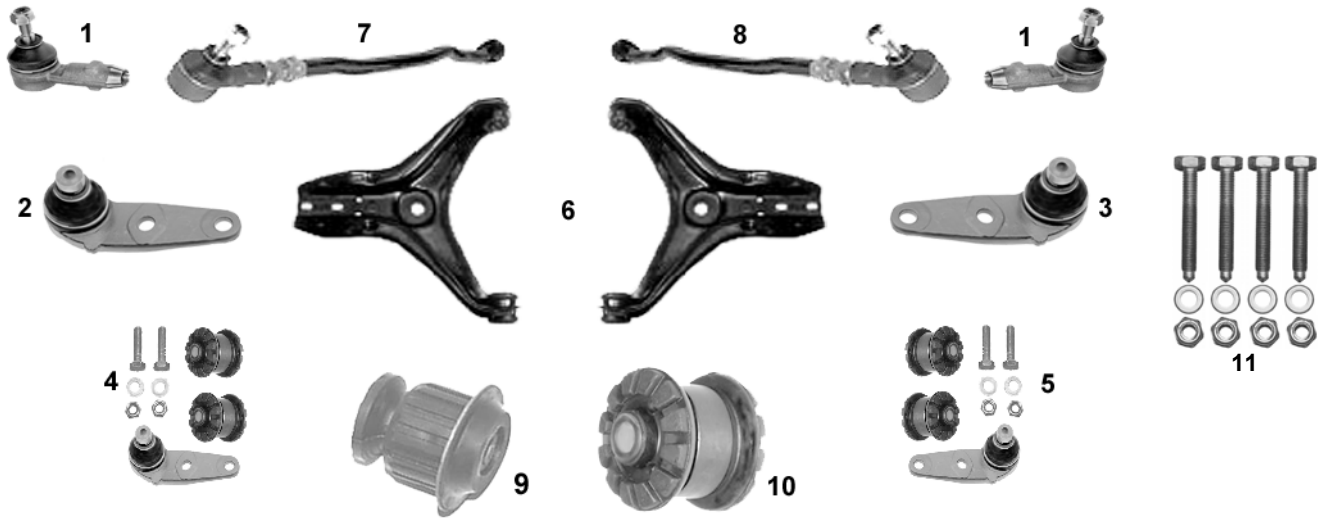

NR	MAPCO	REF								NEW	INFO
1	**19890**	811419812A	✓		✓	✓				✓	M14x1,5RHT
2	**19893**	855407365A/B	✓		✓					✓	Chassis 81-D077974→ **Ø 17 mm**
3	**19894**	855407366A/B	✓			✓				✓	Chassis 81-D077974→ **Ø 17 mm**
4	**19293**		✓		✓					✓	Kit
5	**19294**		✓			✓				✓	Kit
6	**49768**	893407147G	✓		✓	✓				✓	
7	**49761**	811419801E	✓		✓					✓	
8	**49763**	893419802	✓			✓				✓	
9	**33830**	893199415	✓		✓	✓				✓	
10	**33828**	811407181 811407181A	✓		✓	✓				✓	
11	**95705**		✓		✓	✓				✓	MS

AUDI 80 (B3) 09/86→ 07/89
AUDI 90 (B3) 09/86→ 07/89

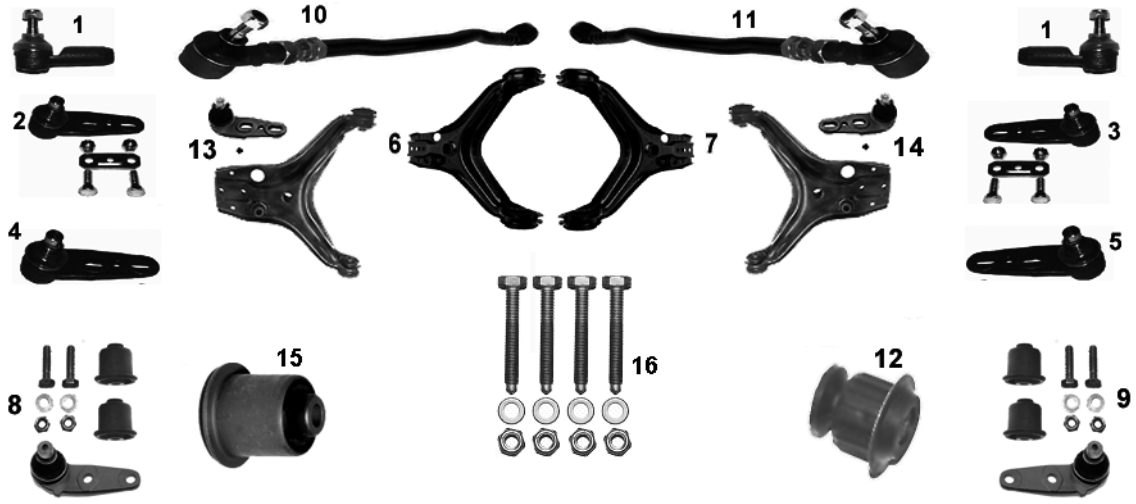

NR	MAPCO	REF								NEW	INFO
1	**19890**	811419812A	✓		✓	✓			✓			M14x1,5RHT
2	**19893**	855407365A/B	✓		✓				✓			Chassis → 89-J-373598 **Ø 17 mm**
3	**19894**	855407366A/B	✓			✓			✓			Chassis → 89-J-373598 **Ø 17 mm**
4	**19680**	893407365F	✓		✓				✓			Chassis 89-J-373599→ **Ø 19 mm**
5	**19681**	893407366F	✓			✓			✓			Chassis 89-J-373599→ **Ø 19 mm**
6	**49769**	893407147C	✓		✓				✓			
7	**49770**	893407148C	✓			✓			✓			
8	**19280**		✓		✓				✓			Kit
9	**19281**		✓			✓			✓			Kit
10	**49761**	811419801E	✓		✓				✓			
11	**49763**	893419802	✓			✓			✓			
12	**33830**	893199415	✓		✓	✓			✓			
13	**49769/1**		✓		✓				✓			**10 + 4**
14	**49770/1**		✓			✓			✓			**11 + 5**
15	**33813**	857407181	✓		✓	✓			✓			
16	**95705**		✓		✓	✓			✓			MS

AUDI 80 (B3)
AUDI 90 (B3)

07/89→09/91

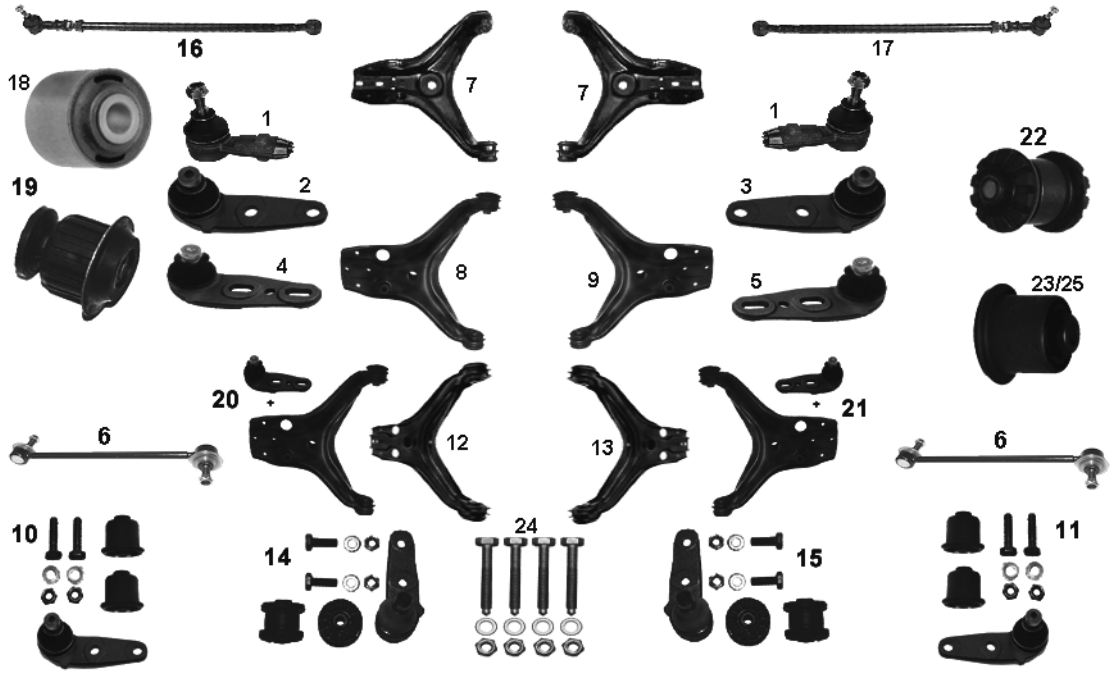

NR	MAPCO	REF			←	→	↑	↓			NEW	INFO
1	**19890**	811419812A	✓		✓	✓			✓	✓		M14x1,5RHT
2	**19898**	893407365A	✓		✓					✓		**Ø 19 mm**
3	**19897**	893407366A	✓			✓				✓		**Ø 19 mm**
4	**19680**	893407365F	✓		✓				✓			**Ø 19 mm**
5	**19681**	893407366F	✓			✓			✓			**Ø 19 mm**
6	**19603HPS**	893407465	✓		✓	✓			✓	✓		Chassis 8A-L-045001→
7	**49768**	893407147G	✓		✓	✓				✓		
8	**49769**	893407147C/D	✓		✓				✓			Chassis → 8A-L-038656
9	**49770**	893407148C/D	✓			✓			✓			Chassis → 8A-L-038656
10	**19280**		✓		✓				✓			Kit
11	**19281**		✓			✓			✓			Kit
12	**49775**	893407147E	✓		✓				✓			Chassis 8A-L-038657→
13	**49776**	893407148E	✓			✓			✓			Chassis 8A-L-038657→
14	**19297**		✓		✓					✓		Kit
15	**19298**		✓			✓				✓		Kit
16	**49761**	811419801E	✓		✓				✓	✓		
17	**49763**	893419802	✓			✓			✓	✓		
18	**33829**	811511247		✓	✓	✓			✓	✓		
19	**33830**	893199415	✓		✓	✓			✓	✓		
20	**49769/1**		✓		✓				✓	✓		**8+4**
21	**49770/1**		✓			✓			✓	✓		**9+5**
22	**33828**	81407181 811407181A	✓		✓	✓				✓		
23	**33813**	857407181	✓		✓	✓			✓			STOP 2.8
24	**95705**		✓		✓	✓			✓	✓		MS
25	**33846**	893407181	✓		✓	✓			✓			✓ 2.8

AUDI 80 + Cabrio (B4) 09/91→12/94

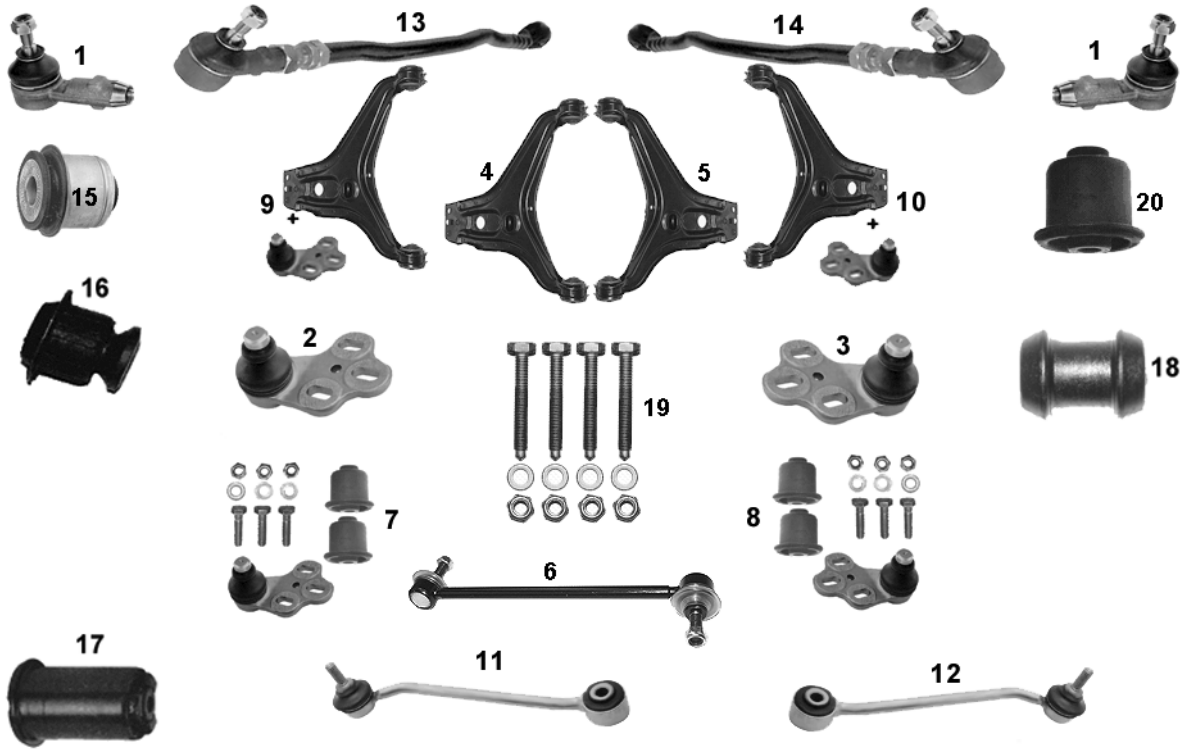

NR	MAPCO	REF								NEW	INFO
1	**19890**	811419812A	✓		✓	✓			✓	✓		M14x1,5RHT
2	**19684**	8A0407365	✓		✓				✓	✓		**Ø 19 mm**
3	**19685**	8A0407366	✓			✓			✓	✓		**Ø 19 mm**
4	**49705**	895407147A	✓		✓				✓	✓		
5	**49706**	895407148A	✓			✓			✓	✓		
6	**19603HPS**	8A0406465C	✓		✓	✓			✓	✓		
7	**19284**		✓		✓	✓			✓	✓		Kit
8	**19285**		✓		✓	✓			✓	✓		Kit
9	**49705/1**		✓		✓				✓	✓		**4+2**
10	**49706/1**		✓			✓			✓	✓		**5+3**
11	**49688**	8D0505465		✓	✓				✓	✓		
12	**49689**	8D0505466		✓		✓			✓	✓		
13	**49761**	811419801E	✓		✓				✓	✓		
14	**49763**	893419802	✓			✓			✓	✓		
15	**33827**	893199419	✓		✓	✓			✓	✓		
16	**33830**	893199415	✓		✓	✓			✓	✓		
17	**33894**	8A0501541		✓	✓	✓			✓	✓		
18	**33907**	857407474	✓		✓	✓			✓	✓		
19	**95705**		✓		✓	✓			✓	✓		MS
20	**33842**	857407181	✓		✓	✓			✓			

AUDI 100 (C3) 09/85→ 01/91

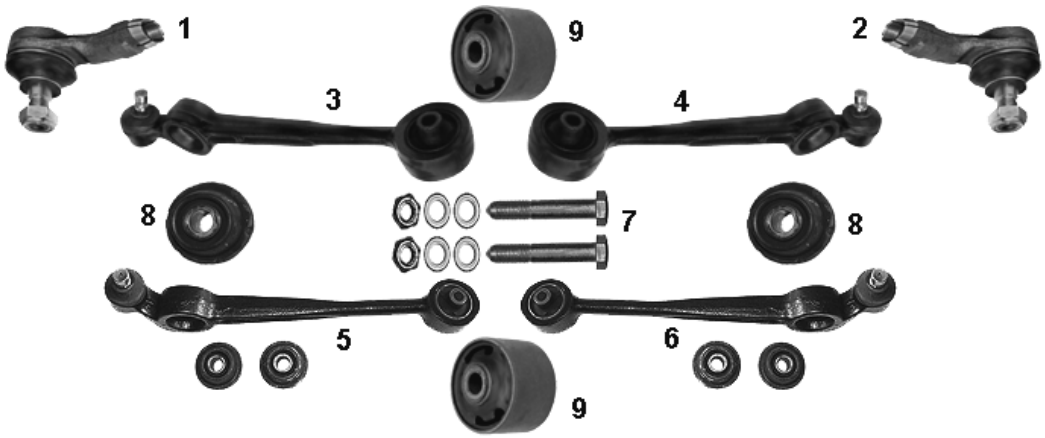

NR	MAPCO	REF			←	→	↑	↓			NEW	INFO
1	**49717**	443419811D	✓		✓				✓	✓		M16x1,5 RHT
2	**49718**	443 419812B 443 419812D	✓			✓			✓	✓		M16x1,5 RHT
3	**49698**	437407151B 443407151B	✓		✓					✓		
4	**49699**	437407151B 443407152B	✓			✓				✓		
5	**49696/1**	437407151A	✓		✓				✓			
6	**49697/1**	437407152A	✓			✓			✓			
7	**95696**		✓		✓	✓			✓	✓		MS
8	**33891**	431407181F	✓		✓	✓			✓	✓		
9	**33898**	431511247C	✓		✓	✓			✓	✓		

AUDI 100 (C4) 09/91→06/94

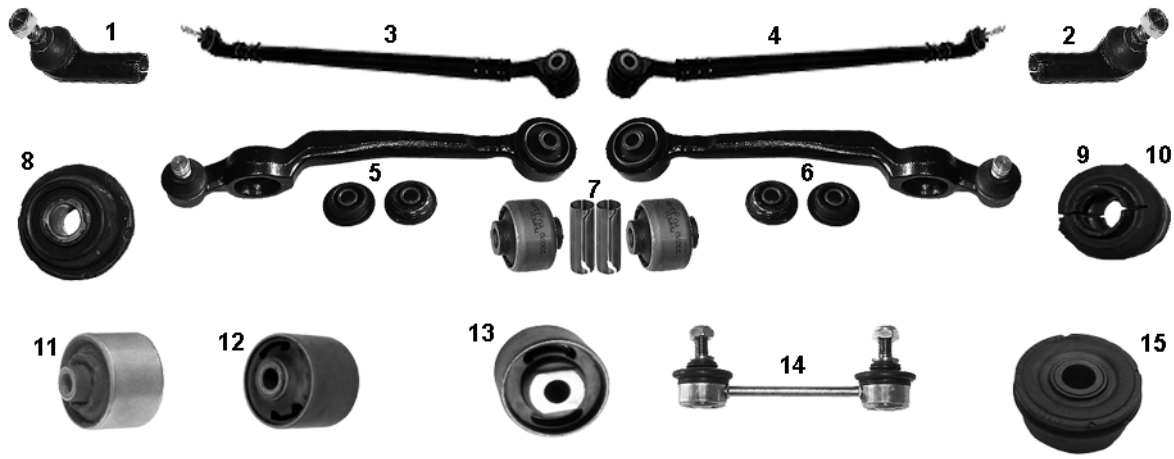

NR	MAPCO	REF								NEW	INFO
1	**19692**	4A0419811A	✓		✓				✓	✓		M18x1,5RHT
2	**19693**	4A0419812A	✓			✓			✓	✓		M18x1,5RHT
3	**49789**	4A0419801A	✓		✓				✓	✓		
4	**49790**	4A0419802A	✓			✓			✓	✓		
5	**19694**	4A0407151	✓		✓				✓	✓		
6	**19695**	4A0407152	✓			✓			✓	✓		
7	**33878/2**		✓		✓	✓			✓	✓		Kit
8	**33892**	4A0407181A	✓		✓	✓			✓	✓		
9	**33938**	4A0411327F	✓		✓	✓			✓	✓		**Ø 24 mm** ✓2.0
10	**36904**	4A0411327A	✓		✓	✓			✓	✓		**Ø 25 mm**
11	**33941**	4D0511523A		✓	✓	✓		✓	✓	✓		
12	**33898**	431511247C		✓	✓	✓			✓	✓		
13	**33899**	4A0511247		✓	✓	✓			✓	✓		
14	**49686**	4A0505389		✓	✓	✓			✓	✓		
15	**36941**	4A0511247B		✓	✓	✓		✓	✓	✓		

AUDI A2 02/00→08/05

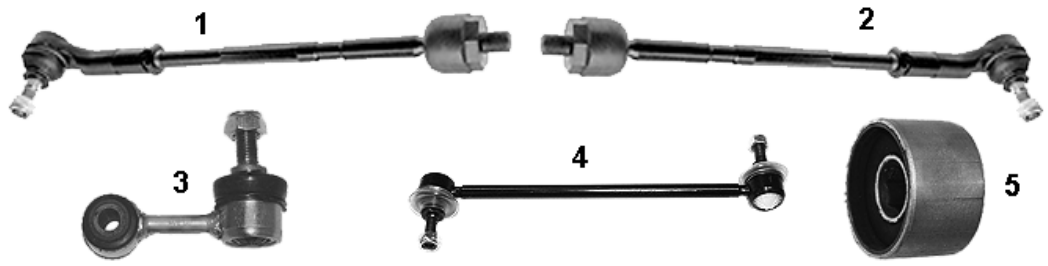

NR	MAPCO	REF								NEW	INFO
1	**59892**	8Z0 423 803C	✓		✓				✓	✓		
2	**59891**	8Z0 423 804C	✓			✓			✓	✓		
3	**59894**	8Z0 411 315B	✓		✓	✓			✓	✓		1.2 TDI
4	**59812HPS**	6Q0 411 315A	✓		✓	✓			✓	✓		1.4, 1.4TDI, 1.6 FSI
5	**36798**	8Z0 407 183	✓		✓	✓			✓	✓		1.4

AUDI A3 (8L1) 10/97→05/03

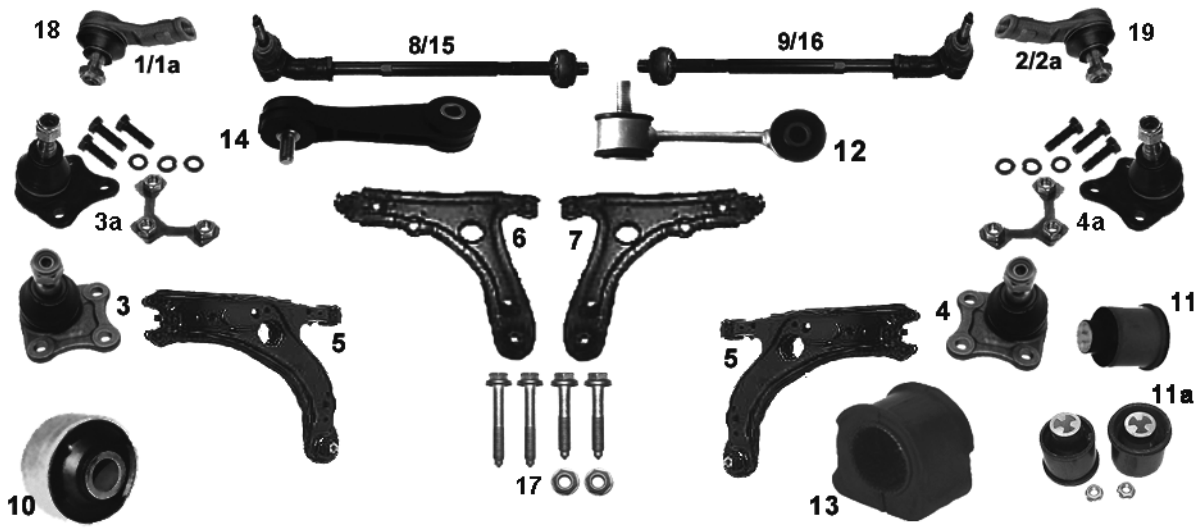

NR	MAPCO	REF								NEW	INFO
1	49700	1J0 422 811B	✓		✓				✓	✓		94mm M14x1,5RHT, Chassis 8L-W-050422 →
1a	59895	1J0 422 811A	✓		✓				✓	✓		75mm M14x1,5RHT, Chassis → 8L-W-050421
2	49701	1J0 422 812B	✓			✓			✓	✓		94mm M14x1,5RHT, Chassis 8L-W-050422 →
2a	59896	1J0 422 812A	✓			✓			✓	✓		75mm M14x1,5RHT, Chassis → 8L-W-050421
3	49702	1J0 407 365C	✓		✓				✓	✓		
3a	49702/1	1J0 407 365A	✓		✓				✓	✓		
4	49703	1J0 407 366C	✓			✓			✓	✓		
4a	49703/1	1J0 407 366A	✓			✓			✓	✓		
5	49704	1J0 407 151B	✓		✓	✓			✓	✓		
6	49704/1		✓		✓				✓	✓		5+3a Chassis 8L-W-050422→
7	49704/2		✓			✓			✓	✓		5+4a Chassis 8L-W-050422→
8	49690	1J0 422 803B	✓		✓				✓	✓		Chassis 8L-W-050422→
9	49691	1J0 422 804B	✓			✓			✓	✓		Chassis 8L-W-050422→
10	33903	1J0 407 181	✓		✓	✓			✓	✓		STOP S3 quattro
10	36772	8N0 407 181B	✓		✓	✓			✓	✓		✓ S3 quattro
11	33912	1J0 501 541C		✓	✓	✓			✓	✓		
11a	33912/2	1J0 501 541C		✓	✓	✓			✓	✓		
12	49867	1J0 411 315C	✓		✓	✓			✓	✓		Stahl/steel 105mm, Ø 23mm
13	33927	1J0 411 314B	✓		✓	✓			✓	✓		Innen Ø 19mm
14	49868	1J0 411 315C	✓		✓	✓			✓	✓		Plastik 105mm Ø 21mm
15	49869	1J0 422 803A	✓		✓				✓	✓		Chassis → 8L-W-050421
16	49870	1J0 422 804A	✓			✓			✓	✓		Chassis → 8L-W-050421
17	95704		✓		✓	✓			✓	✓		MS
18	51711	8N0 422 811A	✓		✓				✓			16x1,5RHT ✓S3 quattro
19	51712	8N0 422 812A	✓			✓			✓			16x1,5RHT ✓S3 quattro

AUDI A3 (8P1) 05/03→
AUDI A3 (8PA) 09/04→

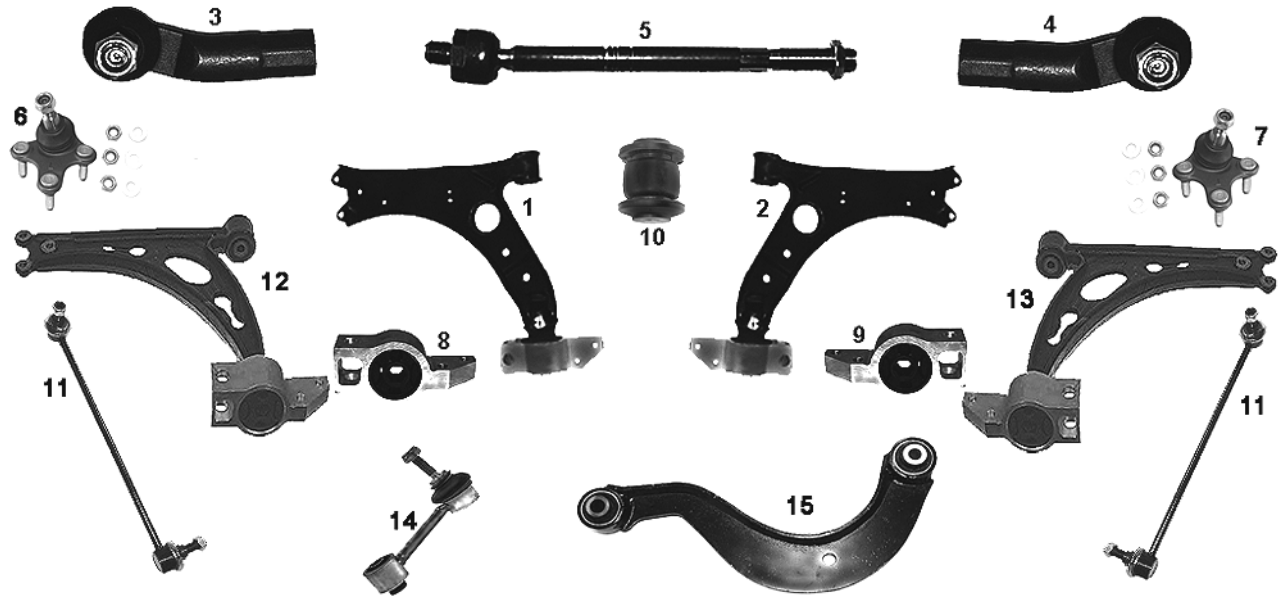

NR	MAPCO	REF								NEW	INFO
1	**51715**	1K0 407 151P	✓		✓			✓	✓	✓		
2	**51716**	1K0 407 152P	✓			✓		✓	✓	✓		
3	**51826**	1K0 423 811J	✓		✓				✓	✓		
4	**51827**	1K0 423 812J	✓			✓			✓	✓		
5	**51723**	1K0 423 810A	✓		✓	✓			✓	✓		M16x1,5RHT 310 mm
6	**51724**	1K0 407 365E	✓		✓			✓	✓	✓		**Ø 16 mm**
7	**51725**	1K0 407 366E	✓			✓		✓	✓	✓		**Ø 16 mm**
8	**36948**	1K0 199 231G	✓		✓			✓	✓	✓		
9	**36949**	1K0 199 232G	✓			✓		✓	✓	✓		
10	**36950**	1K0 407 182	✓		✓	✓		✓	✓	✓		
11	**51825HPS**	1K0 411 315D	✓		✓	✓		✓	✓	✓		
12	**51726**	1K0 407 151AC	✓		✓			✓	✓	✓	✓	
13	**51727**	1K0 407 152M	✓			✓		✓	✓	✓	✓	
14	**51829HPS**	1K0 505 465C		✓	✓	✓			✓	✓		
15	**52718**	1K0 505 323H		✓	✓	✓	✓		✓	✓	✓	

AUDI A4 (B5, B6) 11/94→ 12/04

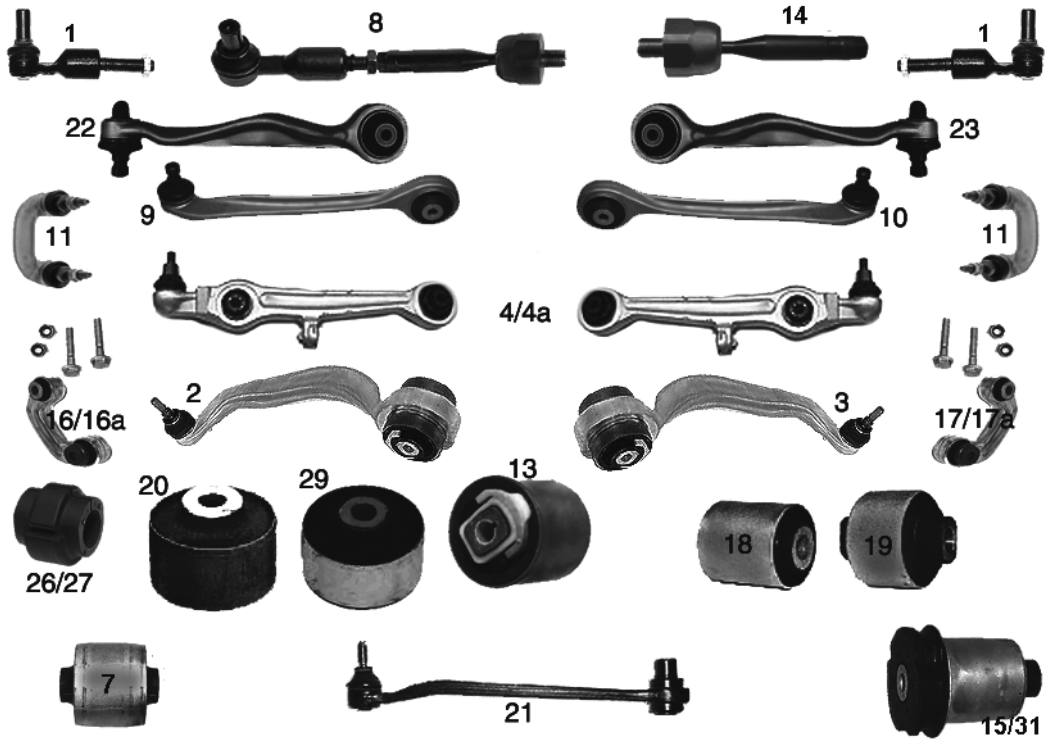

NR	MAPCO	REF			←	→	↑	↓			NEW	INFO
1	**49707HPS**	4D0419811B	✓		✓	✓			✓	✓		
2	**49708OES**	4D0407693N	✓		✓			✓	✓	✓		hinten/ rear/ arrière
3	**49709OES**	4D0407694N	✓			✓		✓	✓	✓		hinten/ rear/ arrière
4	**49710OES**	4D0407151P	✓		✓	✓			✓	✓		vorn/ front/ avant → 10/04
4a	**51710OES**	8E0407151N	✓		✓	✓			✓	✓		vorn/ front/ avant 11/04 →
7	**36778**	4F0407183C	✓		✓	✓		✓	✓	✓		bushing hinten/ rear/ arrière 11/04 →
8	**49732**	4D0419801B	✓		✓	✓			✓	✓		
9	**49680OES**	8D0407505F	✓		✓		✓		✓	✓		vorn/ front/ avant
10	**49681OES**	8D0407506F	✓			✓	✓		✓	✓		vorn/ front/ avant
11	**49682**	4D0411317J	✓		✓	✓			✓	✓		Chassis →8D-W-290000
13	**33932**	4D0407183N	✓		✓	✓		✓	✓	✓		
14	**49738**	4D0422821A	✓		✓	✓			✓	✓		
15	**33902**	8D0501541D		✓	✓	✓			✓	✓		
16	**49683OES**	8D0411317D	✓		✓	✓		✓	✓	✓		
16a	49683/1OES	8D0411317D	✓		✓	✓		✓	✓	✓		+ Chassis 8D-W-290001→
17	**49684OES**	8D0411318D	✓		✓	✓		✓	✓	✓		
17a	49684/1OES	8D0411318D	✓		✓	✓		✓	✓	✓		+ Chassis 8D-W-290001→
18	**33839**	4D0407181H	✓		✓	✓			✓	✓		**Ø 40 mm**
19	**33840**	4D0407182E	✓		✓	✓			✓	✓		**Ø 50 mm**
20	**33876**	4D0407515D	✓		✓	✓			✓	✓		
21	**59893**	8D0 501 530		✓					✓	✓		01/95→
22	**49791OES**	4D0407509G	✓		✓				✓	✓		hinten/ rear/ arrière
23	**49792OES**	4D0407510G	✓			✓			✓	✓		hinten/ rear/ arrière
26	**33939**	4D0411327E	✓		✓	✓			✓	✓		STOP
27	**33940**	4D0411327F	✓		✓	✓			✓	✓		✓
28	**95710**		✓		✓	✓			✓	✓		MS

AUDI A4 (B5, B6)

Fortsetzung / continued (S.24)

11/94→12/04



28



24



24a

32



24b

33



25



26

34



27

NR	MAPCO	REF								NEW	INFO
24	59818HPS	4D0498998C	✓		✓	✓			✓	✓	
24a	59818/1HPS	4D0498998C	✓		✓	✓			✓	✓	→ 10/04 + MS
24b	59818/2	4D0498998C	✓		✓	✓			✓	✓	→ 10/04 + MS
25	59819	8D0498998	✓		✓	✓			✓	✓	
26	59819/1	8D0498998	✓		✓	✓			✓	✓	→ 10/04 + MS
27	59819/2	8D0498998	✓		✓	✓			✓	✓	
29	36915	4B0407515	✓		✓	✓	✓		✓	✓	vorn/ front/ avant
31	33988	8D0501541A		✓	✓	✓			✓	✓	✓
32	59824/1HPS		✓		✓	✓			✓	✓	11/04→ + MS
33	59824/2		✓		✓	✓			✓	✓	11/04→ + MS
34	59825/1		✓		✓	✓			✓	✓	11/04→ + MS

AUDI A4 (8EC), (8ED) 11/04→

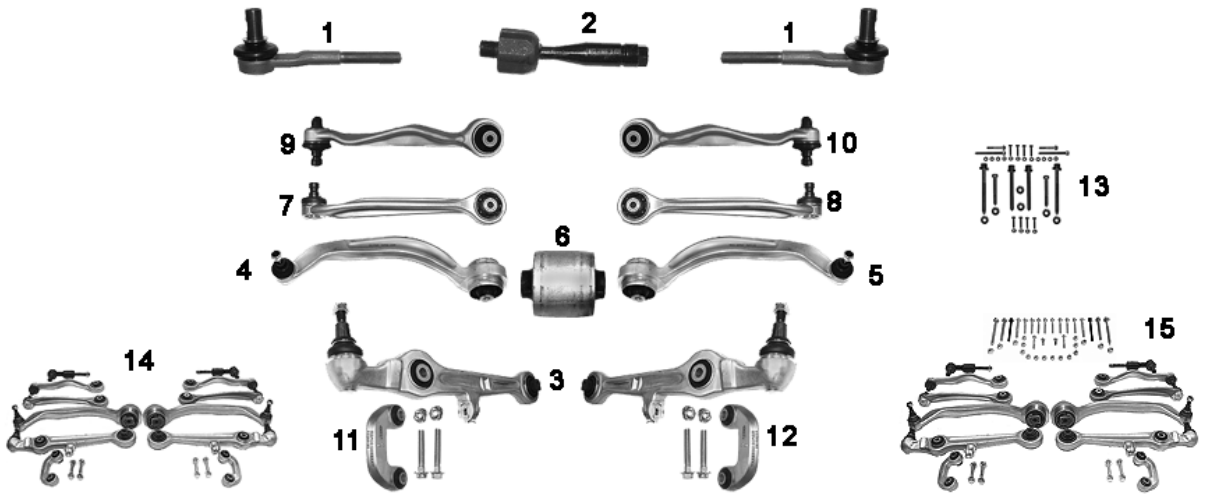

NR	MAPCO	REF			←	→	↑	↓			NEW	INFO
1	**59707OES**	4B0419811G	✓		✓	✓			✓		✓	Metall Konus 17,5 mm M14 x 1,5 mm
2	**49738**	4D0422821A	✓		✓	✓			✓			
3	**51710OES**	8E0407151N	✓		✓	✓			✓			vorn/ front/ avant
4	**51872**	8E0407693AL	✓		✓			✓	✓		✓	hinten/ rear/ arrière
5	**51873**	8E0407694AL	✓			✓		✓	✓		✓	hinten/ rear/ arrière
6	**36778**	4F0407183C	✓		✓	✓		✓	✓			bushing hinten/ rear/ arrière
7	**49680OES**	8D0407505F	✓		✓		✓		✓			vorn/ front/ avant
8	**49681OES**	8D0407506F	✓			✓	✓		✓			vorn/ front/ avant
9	**49791OES**	4D0407509G	✓		✓		✓		✓			hinten/ rear/ arrière
10	**49792OES**	4D0407510G	✓			✓	✓		✓			hinten/ rear/ arrière
11	**52712**	8E0411317	✓		✓			✓	✓		✓	
12	**52713**	8E0411318	✓			✓		✓	✓		✓	
13	**95710**		✓		✓	✓			✓			MS
14	**59827**	8E0498998	✓		✓	✓			✓		✓	
15	**59827/1**	8E0498998	✓		✓	✓			✓		✓	+ MS

AUDI A6 (C4) 08/94→ 12/97



NR	MAPCO	REF								NEW	INFO
1	**49717**	443419811D	✓		✓				✓	✓		M16x1,5RHT
2	**49718**	443419812D	✓			✓			✓	✓		M16x1,5RHT
3	**19694**	4A0407151	✓		✓				✓	✓		
4	**19695**	4A0407152	✓			✓			✓	✓		
5	**49686**	4A0505389		✓	✓	✓			✓	✓		
6	**33878/2**		✓		✓	✓			✓	✓		Kit
7	**33892**	4A0407181A	✓		✓	✓			✓	✓		
8	**33898**	431511247C	✓		✓	✓			✓	✓		
9	**33899**	4A0511247		✓	✓	✓			✓	✓		
10	**49789**	4A0419801A	✓		✓				✓	✓		
11	**49790**	4A0419802A	✓			✓			✓	✓		
12	**33941**	4D0511523A		✓	✓	✓		✓	✓	✓		
13	**33938**	4A0411327F	✓		✓	✓			✓	✓		**Ø 24 mm** ✓2.0
14	**36904**	4A0411327A	✓		✓	✓			✓	✓		**Ø 25 mm**
15	**36941**	4A0511247B		✓	✓	✓		✓	✓	✓	✓	

AUDI A6 (C5) 01/97→01/05

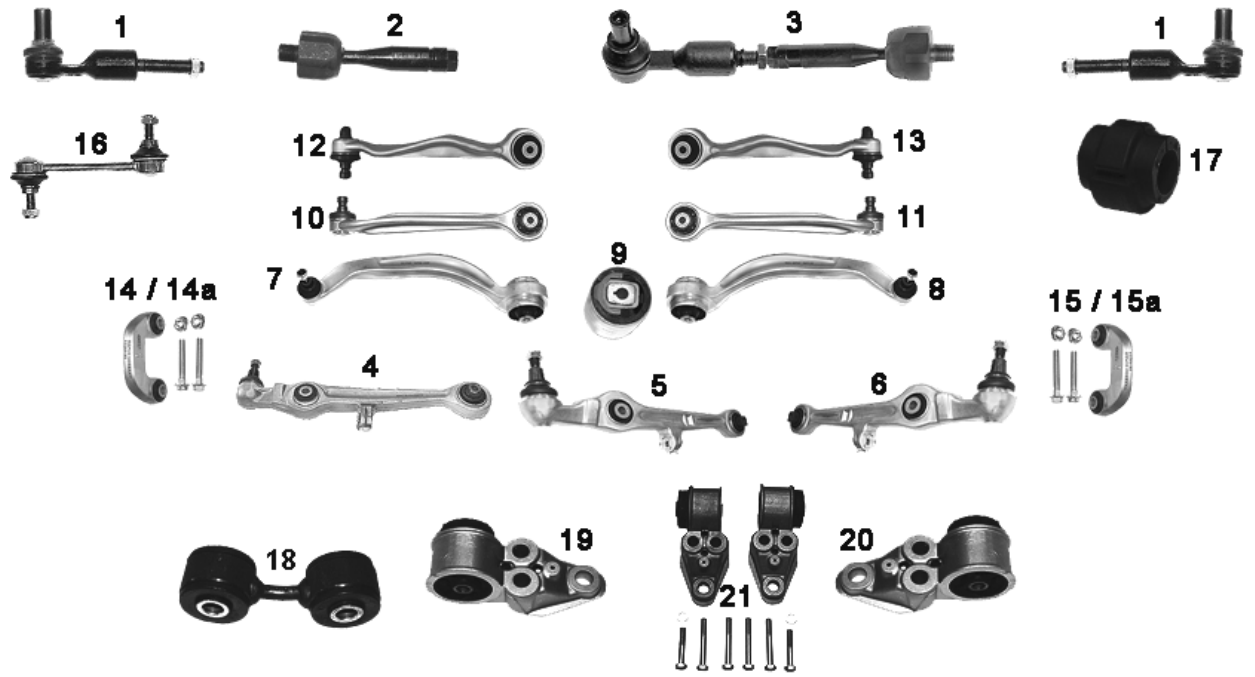

NR	MAPCO	REF			←	→	↑	↓		NEW	INFO
1	**49707HPS**	4D0419811B	✓		✓	✓			✓	✓	
2	**49738**	4D0422821A	✓		✓	✓			✓	✓	
3	**49732**	4D0419801B	✓		✓	✓			✓	✓	
4	**49710OES**	4D0407151P	✓		✓	✓			✓	✓	vorn/ front/ avant →12/01
5	**51710OES**	8E0407151N	✓		✓	✓			✓	✓	✓quattro 1998→ 12/01 vorn/ front/ avant 01/02 →
6	**51730**	4B3407151K	✓		✓	✓			✓	✓	CH. → 4B-3-011-544 CH. 4B-2-031-501→
7	**49708OES**	4D0407693N	✓		✓			✓	✓	✓	hinten/ rear/ arrière
8	**49709OES**	4D0407694N	✓			✓		✓	✓	✓	hinten/ rear/ arrière
9	**33932**	4D0407183N	✓		✓	✓		✓	✓	✓	
10	**49680OES**	8D0407505F	✓		✓		✓		✓	✓	vorn/ front/ avant
11	**49681OES**	8D0407506F	✓			✓	✓		✓	✓	vorn/ front/ avant
12	**49791OES**	4D0407509G	✓		✓				✓	✓	hinten/ rear/ arrière
13	**49792OES**	4D0407510G	✓			✓			✓	✓	hinten/ rear/ arrière
14	**49683OES**	8D0411317D	✓		✓	✓		✓	✓	✓	
14a	**49683/1OES**	8D0411317D	✓		✓	✓		✓	✓	✓	+ Chassis 8D-W-290001→
15	**49684OES**	8D0411318D	✓		✓	✓		✓	✓	✓	
15a	**49684/1OES**	8D0411318D	✓		✓	✓		✓	✓	✓	+ Chassis 8D-W-290001→
16	**49714**	4D0505465D	✓		✓	✓			✓	✓	
17	**33940**	4D0411327F	✓		✓	✓			✓	✓	
18	**59820**	8E0505465C		✓	✓	✓			✓	✓	✓ quattro
19	**36775**	4B0501521D		✓	✓				✓	✓	
20	**36776**	4B0501522D		✓		✓			✓	✓	
21	**36782**			✓	✓	✓			✓	✓	

Fortsetzung / continued Seite/ page 29

AUDI A6 (C5) — Fortsetzung / continued (S.28) — 01/97→01/05

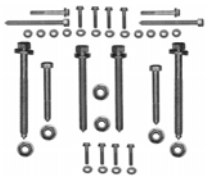
23


24
33


25
28
34


26
29


27


30
31


32

NR	MAPCO	REF									NEW	INFO
23	**95710**		✓		✓	✓			✓	✓		MS
24	**59818HPS**	4D0498998C	✓		✓	✓			✓	✓		
25	**59818/1HPS**	4D0498998C	✓		✓	✓			✓	✓		→12/01 + MS
26	**59818/2**	4D0498998C	✓		✓	✓			✓	✓		→12/01 + MS
27	**59819**	8D0498998	✓		✓	✓			✓	✓		
28	**59824/1HPS**		✓		✓	✓			✓	✓		✓ quattro 1998→ 12/01, 01/02 → + MS
29	**59824/2**		✓		✓	✓			✓	✓		✓ quattro 1998→ 12/01, 01/02 → + MS
30	**59825/1**		✓		✓	✓			✓	✓		✓ quattro 1998→ 12/01, 01/02 → + MS
31	**59819/1**	8D0498998	✓		✓	✓			✓	✓		→ 12/01 + MS
32	**59819/2**	8D0498998	✓		✓	✓			✓	✓		
33	**59826**	4B3498998	✓		✓	✓			✓	✓	✓	CH. → 4B-3-011-544 CH. 4B-2-031-501→
34	**59826/1**	4B3498998	✓		✓	✓			✓	✓	✓	CH. → 4B-3-011-544 CH. 4B-2-031-501→ + MS

AUDI A6 (4F2), (4F5) 05/04→

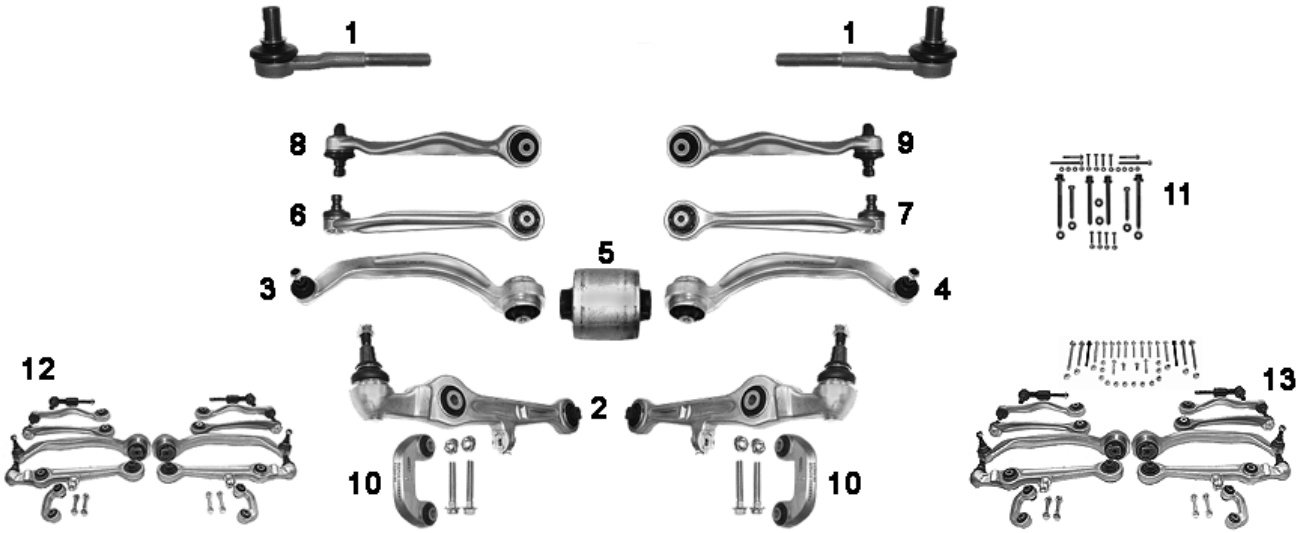

NR	MAPCO	REF			←	→	↑	↓			NEW	INFO
1	**59707OES**	4B0419811G	✓		✓	✓			✓	✓	✓	Metall Konus 17,5 mm M14 x 1,5 mm
2	**52710**	4F0407151	✓		✓	✓		✓	✓	✓	✓	vorn/ front/ avant
3	**51874**	4F0407693B	✓		✓			✓	✓	✓	✓	hinten/ rear/ arrière
4	**51875**	4F0407694B	✓			✓		✓	✓	✓	✓	hinten/ rear/ arrière
5	**36777**	4F0407183A	✓		✓	✓		✓	✓	✓	✓	hinten/ rear/ arrière
6	**51876**	4E0407505B	✓		✓		✓		✓	✓	✓	hinten/ rear/ arrière
7	**51877**	4E0407506B	✓			✓	✓		✓	✓	✓	hinten/ rear/ arrière
8	**51878**	4E0407509B	✓		✓		✓		✓	✓	✓	vorn/ front/ avant
9	**51879**	4E0407510B	✓			✓	✓		✓	✓	✓	vorn/ front/ avant
10	**52711**	4E0411317E	✓		✓	✓		✓	✓	✓	✓	
11	**95710**		✓		✓	✓			✓	✓		MS
12	**59828**		✓		✓	✓			✓	✓	✓	
13	**59828/1**		✓		✓	✓			✓	✓	✓	+ MS

AUDI A8 (4D8) 08/94→09/02

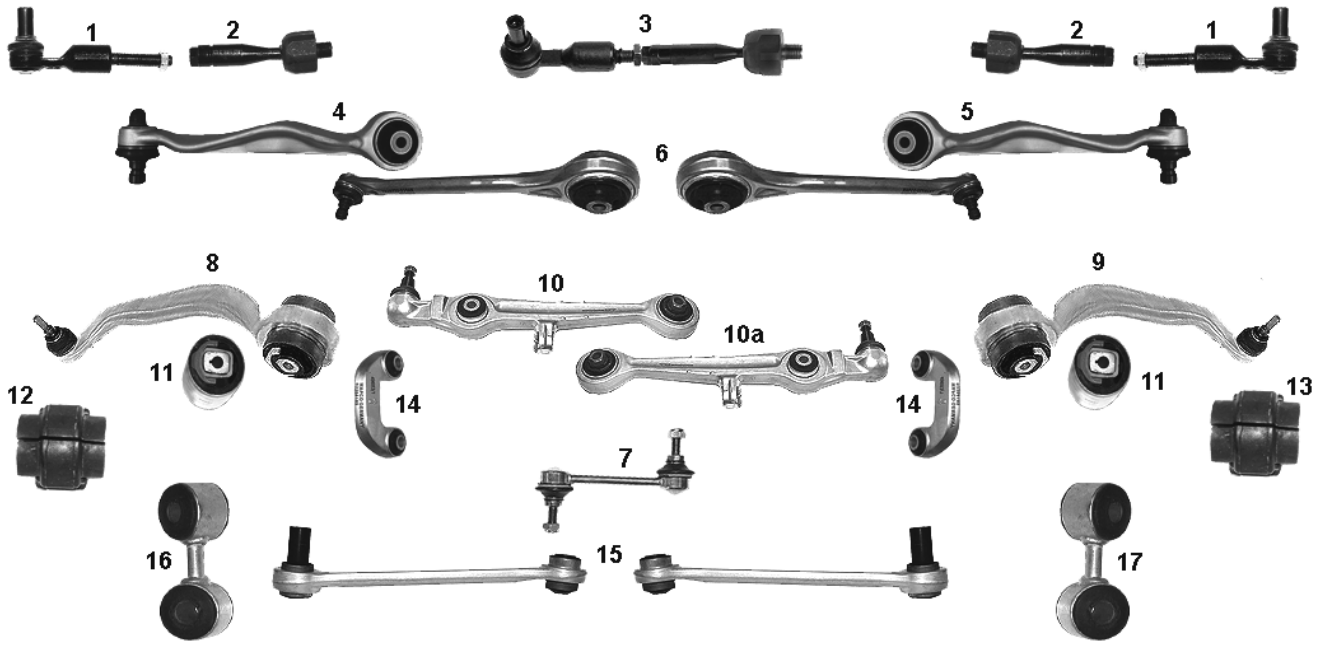

NR	MAPCO	REF								NEW	INFO
1	**49707HPS**	4D0419811B	✓		✓	✓			✓	✓		
2	**49738**	4D0422821A	✓		✓	✓			✓	✓		
3	**49732**	4D0419801B	✓		✓	✓			✓	✓		
4	**49791OES**	4D0407509G	✓		✓				✓	✓		hinten/ rear/ arrière
5	**49792OES**	4D0407510G	✓			✓			✓	✓		hinten/ rear/ arrière
6	**49713OES**	4D0407505D	✓		✓				✓	✓		
7	**49714**	4D0505465D		✓	✓	✓			✓	✓		
8	**49708OES**	4D0407693N	✓		✓			✓	✓	✓		hinten/ rear/ arrière
9	**49709OES**	4D0407694N	✓			✓		✓	✓	✓		hinten/ rear/ arrière
10	**49710OES**	4D0407151P	✓		✓	✓			✓	✓		vorn/ front/ avant →12/98
10a	**51710OES**	8E0407151N	✓		✓	✓			✓	✓		vorn/ front/ avant 01/99 →2003
11	**33932**	4D0407183N	✓		✓	✓		✓	✓	✓		
12	**33939**	4D0411327E	✓		✓	✓			✓	✓		STOP
13	**33940**	4D0411327F	✓		✓	✓			✓	✓		✓
14	**49685OES**	4D0411317K	✓		✓	✓		✓	✓	✓		
15	**49716**	4D0501529E		✓	✓	✓			✓	✓		
16	**49729**	4D0505547C		✓	✓				✓	✓		
17	**49715**	4D0505548C		✓		✓			✓	✓		
18	**95713**		✓		✓	✓			✓	✓		MS

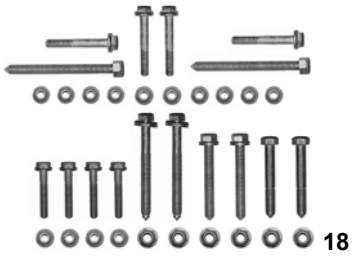

Fortsetzung / continued
Seite/page 32

AUDI A8 (4D8) — Fortsetzung / continued (S.31) — 08/94→09/02


19


19a


20


20a

NR	MAPCO	REF										INFO
19	59821		✓		✓	✓			✓	✓		Chassis →144999
19a	59821/1		✓		✓	✓			✓	✓		Chassis →144999 + MS
20	59822		✓		✓	✓			✓	✓		Chassis 145000→
20a	59822/1		✓		✓	✓			✓	✓		Chassis 145000→ + MS

AUDI A8 (4E_) — 10/02→

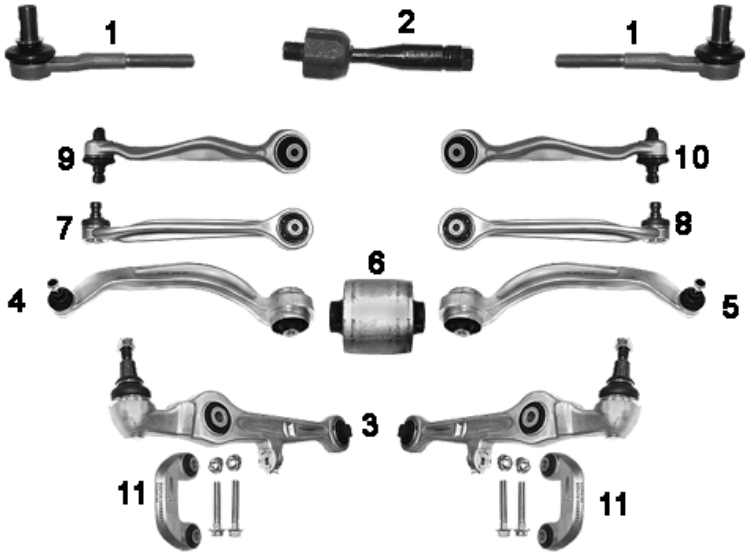

NR	MAPCO	REF										INFO
1	51735	4E0419811E	✓		✓	✓			✓	✓	✓	Metall Konus 23,0mm M16 x 1,5 mm
2	51736	4E0419801E	✓		✓	✓			✓	✓	✓	
3	51737	4E0407151L	✓		✓	✓		✓	✓	✓	✓	vorn/ front/ avant
4	51738	4E0407693N	✓		✓			✓	✓	✓	✓	hinten/ rear/ arrière
5	51739	4E0407694N	✓			✓		✓	✓	✓	✓	hinten/ rear/ arrière
6	36777	4F0407183A	✓		✓	✓		✓	✓	✓	✓	hinten/ rear/ arrière
7	51876	4E0407505B	✓		✓		✓		✓	✓	✓	vorn/ front/ avant
8	51877	4E0407506B	✓			✓	✓		✓	✓	✓	vorn/ front/ avant
9	51878	4E0407509B	✓		✓		✓		✓	✓	✓	hinten/ rear/ arrière
10	51879	4E0407510B	✓			✓	✓		✓	✓	✓	hinten/ rear/ arrière
11	52711	4E0411317E	✓		✓	✓		✓	✓	✓	✓	

AUDI TT (8N3)
AUDI TT Roadster (8N9)

10/98→
10/99→

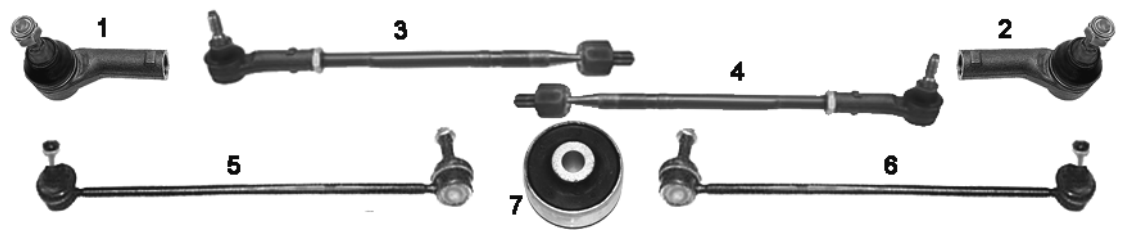

NR	MAPCO	REF								NEW	INFO
1	**51711**	8N0422811A	✓		✓				✓	✓		16x1,5RHT
2	**51712**	8N0422812A	✓			✓			✓	✓		16x1,5RHT
3	**51713**	8N0422803A	✓		✓				✓	✓		
4	**51714**	8N0422804A	✓			✓			✓	✓		
5	**49793**	1J0411315D	✓		✓				✓	✓		
6	**49794**	1J0411316D	✓			✓			✓	✓		
7	**36772**	8N0407181B	✓		✓	✓			✓	✓		

AUDI TT (8J3)
AUDI TT Roadster (8J9)

10/06→
02/07→



NR	MAPCO	REF								NEW	INFO
1	**51829HPS**	1K0505465J		✓	✓	✓			✓	✓		

AUDI Q7 (4L) 08/06→

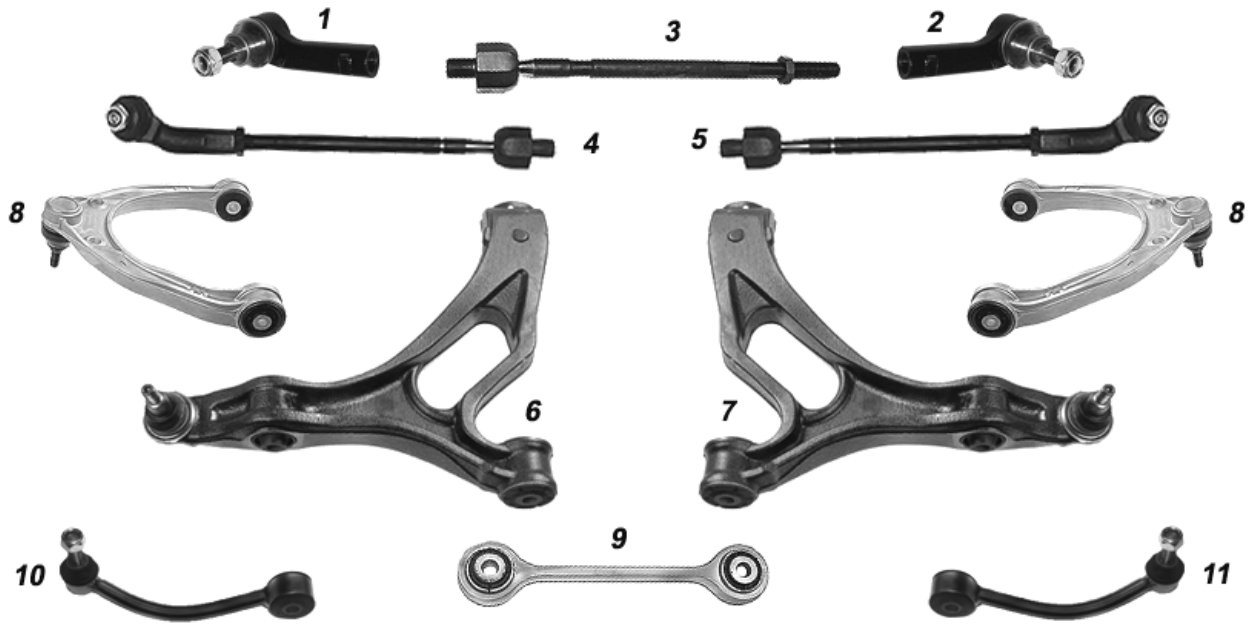

NR	MAPCO	REF									NEW	INFO
1	**51742**	7L0422817D	✓		✓				✓	✓	✓	M16X1,5
2	**51743**	7L0422818D	✓			✓			✓	✓	✓	M16X1,5
3	**51744**	7L0422821	✓		✓	✓			✓	✓	✓	M16X1,5
4	**51745**	7L0422803D	✓		✓				✓	✓	✓	1+3
5	**51746**	7L0422804D	✓			✓			✓	✓	✓	2+3
6	**52714**	7L8407151E	✓		✓			✓	✓	✓	✓	
7	**52715**	7L8407152D	✓			✓		✓	✓	✓	✓	
8	**52716**	7L0407021	✓		✓	✓	✓		✓	✓	✓	
9	**51824**	7L0411317	✓		✓	✓			✓	✓		197,0 mm
10	**51733**	7L0505465D		✓	✓				✓	✓	✓	
11	**51734**	7L0505466D		✓		✓			✓	✓	✓	

BMW

BMW 1er (E81, E87)	**09/04→**
BMW 1er Cabriolet (E88)	**03/08→**
BMW 1er Coupe (E82)	**10/07→**

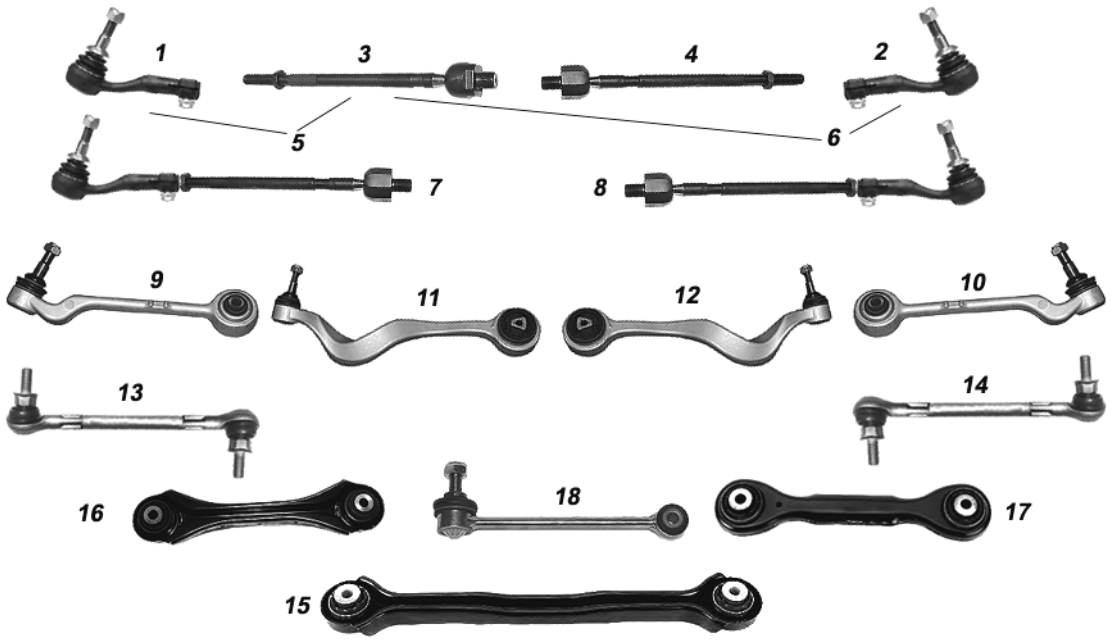

NR	MAPCO	REF			←	→	↑	↓			NEW	INFO
1	**51667**	32106765089	✓		✓				✓	✓	✓	**TRW**
2	**51668**	32106765090	✓			✓			✓	✓	✓	**TRW**
3	**51653**	No OE ref	✓		✓	✓			✓	✓	✓	**TRW**
4	**51654**	No OE ref	✓		✓	✓			✓	✓	✓	**ZF**
5	**51655**	32216762243	✓		✓				✓	✓	✓	**TRW**
6	**51656**	32216762244	✓			✓			✓	✓	✓	**TRW**
7	**51665**	32106765235	✓		✓				✓	✓	✓	**ZF**
8	**51666**	32106765236	✓			✓			✓	✓	✓	**ZF**
9	**51634**	31126763699	✓		✓			✓	✓	✓		**Ø 16 mm**
10	**51635**	31126763700	✓			✓		✓	✓	✓		**Ø 16 mm**
11	**51648**	31124036269	✓		✓			✓	✓	✓	✓	
12	**51649**	31124036270	✓			✓		✓	✓	✓	✓	
13	**51657**	31356765933	✓		✓				✓	✓	✓	
14	**51658**	31356765934	✓			✓			✓	✓	✓	
15	**51651**	33326763471		✓	✓	✓		✓	✓	✓	✓	
16	**51650**	33326763473		✓	✓	✓	✓		✓	✓	✓	
17	**51652**	33326765425		✓	✓	✓	✓		✓	✓	✓	**241,0 mm**
18	**51659**	33556764428		✓	✓	✓			✓	✓	✓	

BMW X1 _Drive 10/09→

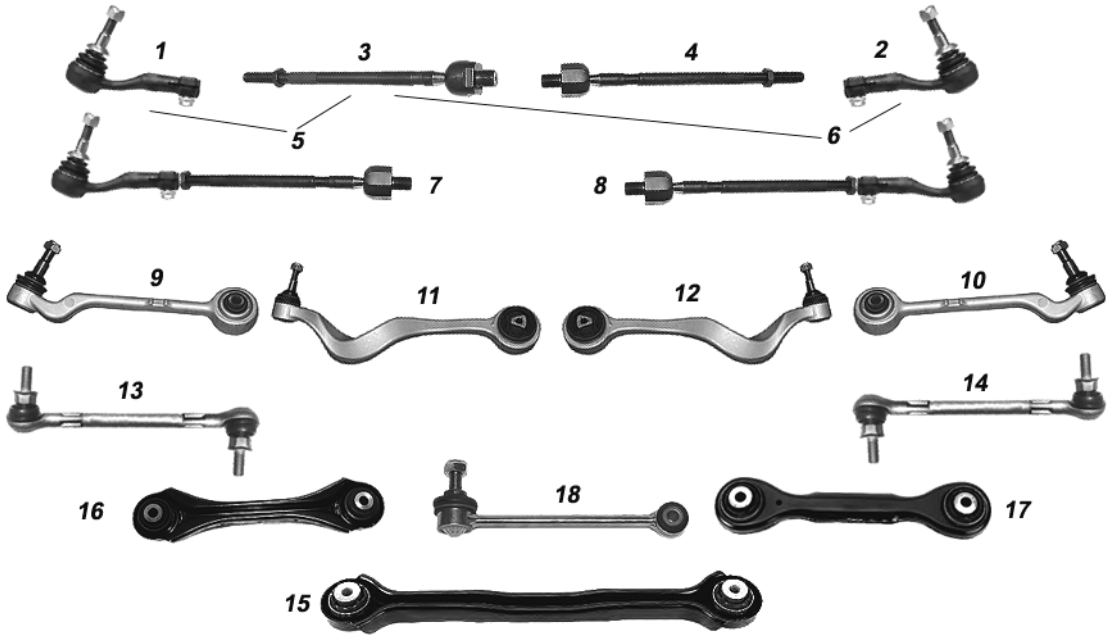

NR	MAPCO	REF										INFO
1	51667	32106765089	✓		✓				✓	✓	✓	TRW
2	51668	32106765090	✓			✓			✓	✓	✓	TRW
3	51653	No OE ref	✓		✓	✓			✓	✓	✓	TRW
4	51654	No OE ref	✓		✓	✓			✓	✓	✓	ZF
5	51655	32216762243	✓		✓				✓	✓	✓	TRW
6	51656	32216762244	✓			✓			✓	✓	✓	TRW
7	51665	32106765235	✓		✓				✓	✓	✓	ZF
8	51666	32106765236	✓			✓			✓	✓	✓	ZF
9	51634	31126763699	✓		✓			✓	✓	✓		Ø 16 mm
10	51635	31126763700	✓			✓		✓	✓	✓		Ø 16 mm
11	51648	31124036269	✓		✓			✓	✓	✓	✓	
12	51649	31124036270	✓			✓		✓	✓	✓	✓	
13	51657	31356765933	✓		✓				✓	✓	✓	
14	51658	31356765934	✓			✓			✓	✓	✓	
15	51651	33326763471		✓	✓	✓		✓	✓	✓	✓	
16	51650	33326763473		✓	✓	✓	✓		✓	✓	✓	
17	51652	33326765425		✓	✓	✓	✓		✓	✓	✓	241,0 mm
18	51659	33556764428		✓	✓	✓			✓	✓	✓	

BMW 3er (E30) 10/82→08/90

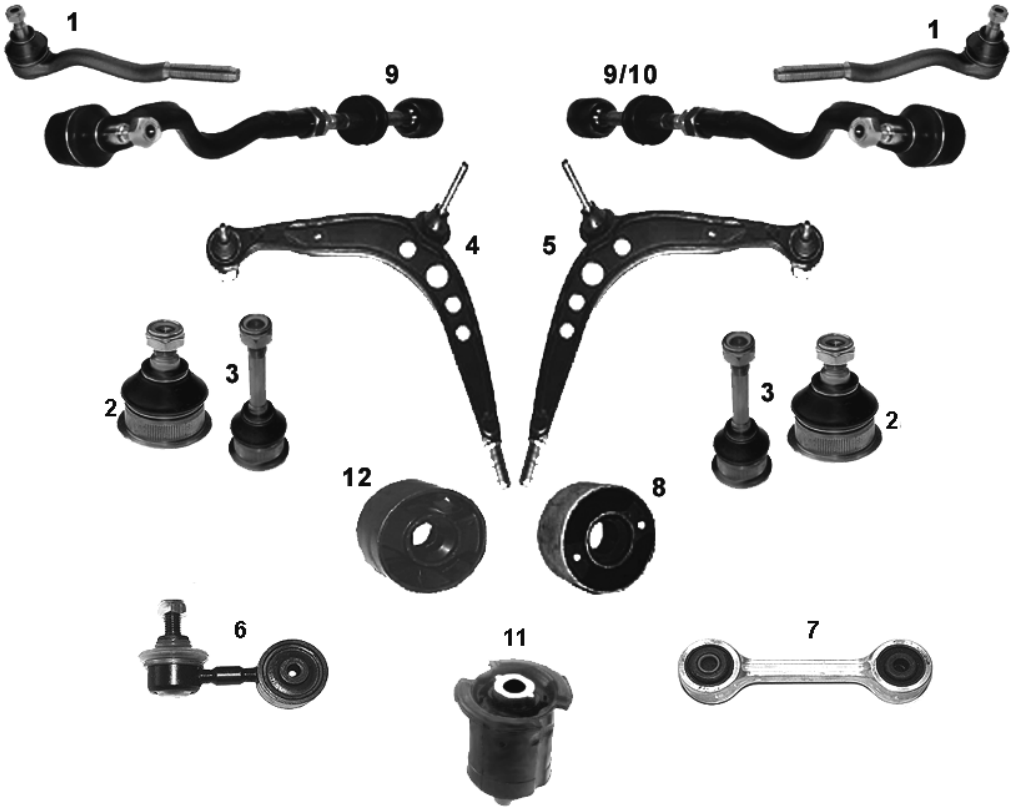

NR	MAPCO	REF								NEW	INFO
1	**19660**	32111126757	✓		✓	✓			✓	✓		M14x1,5RHT
2	**19661**	31121126254	✓		✓	✓		✓	✓	✓		
3	**19662**	31121126253	✓		✓	✓		✓	✓	✓		
4	**49733**	31121127725	✓		✓				✓	✓		
5	**49734**	31121127726	✓			✓			✓	✓		
6	**19667HPS**	31351091764	✓		✓	✓			✓	✓		
7	**49786**	33551126932		✓	✓	✓			✓	✓		
8	**33875**	31129058815	✓		✓	✓			✓	✓		
9	**49780**	32111125186	✓		✓	✓			✓	✓		STOP 
10	**49781**	32111125187	✓			✓			✓	✓		✓ 
11	**33689**	33311129144		✓	✓	✓			✓	✓		**15x58x104 mm**
12	**33875/1**	31121130123	✓		✓	✓			✓	✓		

BMW Z1 1988→1991

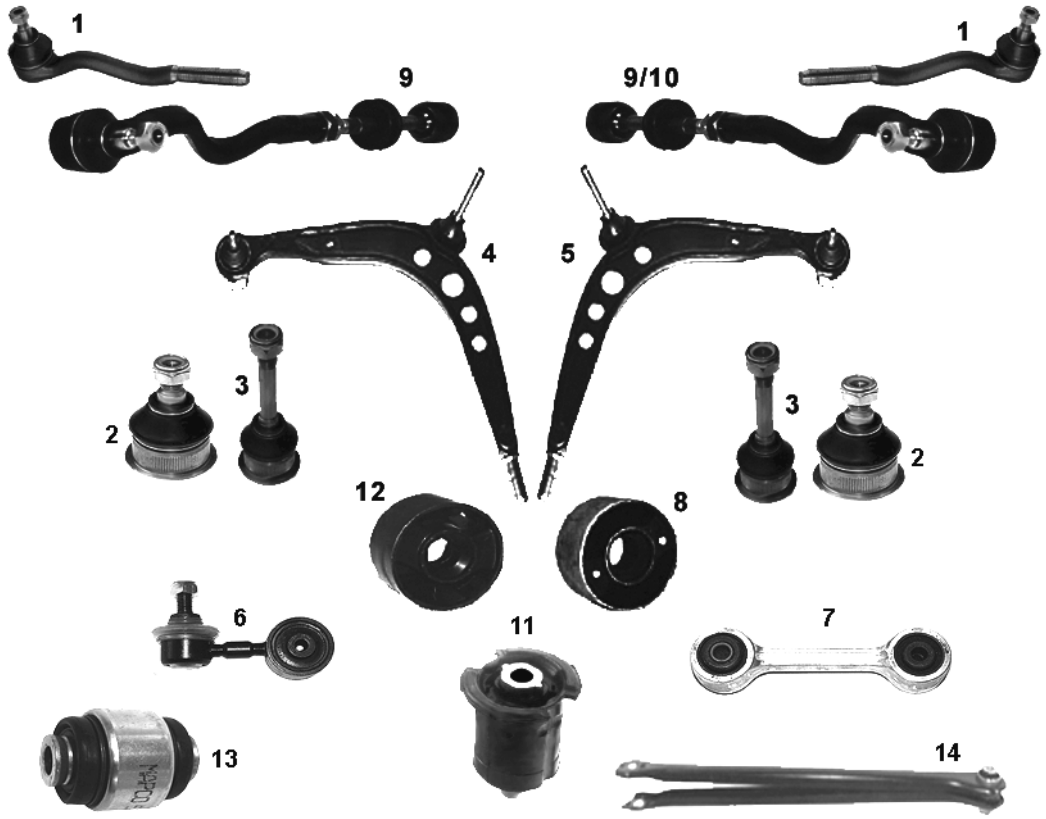

NR	MAPCO	REF									NEW	INFO
1	**19660**	32111126757	✓		✓	✓			✓	✓		M14x1,5RHT
2	**19661**	31121126254	✓		✓	✓		✓	✓	✓		
3	**19662**	31121126253	✓		✓	✓		✓	✓	✓		
4	**49733**	31121127725	✓		✓				✓	✓		
5	**49734**	31121127726	✓			✓			✓	✓		
6	**19667HPS**	31351091764	✓		✓	✓			✓	✓		
7	**49786**	33551126932		✓	✓	✓			✓	✓		
8	**33875**	31129058815	✓		✓	✓			✓	✓		
9	**49780**	32111125186	✓		✓	✓			✓	✓		
10	**49781**	32111125187	✓			✓			✓	✓		✓ 
11	**33689**	33311129144		✓	✓	✓			✓	✓		**15x58x104 mm**
12	**33875/1**	31121130123 31121130140 31129058931	✓		✓	✓			✓	✓		
13	**59621**	33321138722		✓	✓	✓			✓	✓		**aussen/outside**
14	**59638**	33321092237		✓	✓	✓		✓	✓	✓		✓ **2,5**

BMW 3er (E36) 09/90→ 1999

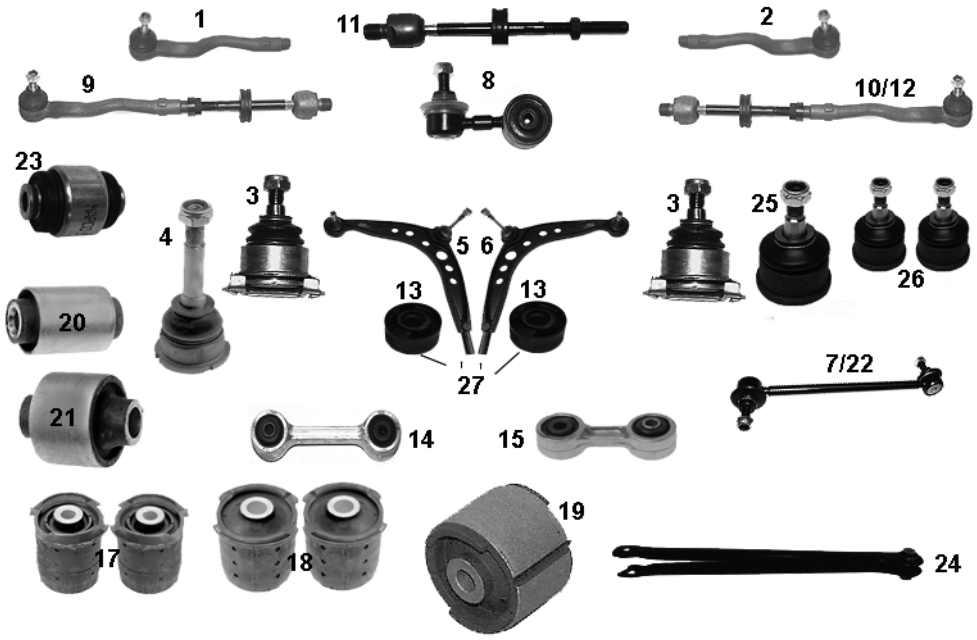

NR	MAPCO	REF								NEW	INFO
1	19663	32111139313	✓		✓				✓	✓		M14x1,5RHT
2	19664	32111139314	✓			✓			✓	✓		M14x1,5RHT
3	19666HPS	31121140398	✓		✓	✓			✓	✓		M12x1,5 / 36,5 mm
4	19665	31121139131	✓		✓	✓			✓	✓		M14x1,5 / 89,7 mm
5	19670HPS	31121140957	✓		✓				✓	✓		
6	19671HPS	31121140958	✓			✓			✓	✓		
7	19678HPS	31351134582	✓		✓	✓			✓			10/91→
8	19667HPS	31351091764	✓		✓	✓			✓	✓		
9	49782	32111139315	✓		✓				✓	✓		367 mm
10	49783	32111139316	✓			✓			✓	✓		367 mm ✓  316i M40
11	49785/1	32111136133	✓		✓	✓			✓	✓		M14x1,5
12	49785	32111139318	✓			✓			✓	✓		367 mm ✓  ✓ 316i M40
13	33847	31129059288	✓		✓	✓			✓	✓		
14	49786	33551126932		✓	✓	✓			✓	✓		STOP **COMPACT**
15	49787	33551135307		✓	✓	✓			✓	✓		✓ **COMPACT**
17	33692	33319059300		✓	✓	✓			✓	✓		**12,5x60,5x77 mm**
17	33692/2	Kit : 2 x 33692		✓	✓	✓			✓	✓		**axle kit**
18	33693	33319059301		✓	✓	✓			✓	✓		**15,5x62,5x66,5 mm**
18	33693/2	Kit : 2 x 33693		✓	✓	✓			✓	✓		**axle kit**
19	33934	33321097009		✓	✓	✓			✓	✓		für **Längslenker** Aluminium
20	36661	33321092248		✓	✓	✓			✓	✓		**Innen/inner Stahl/steel 52,0x40,0x12,0 mm**
21	36662	33321136311		✓	✓	✓			✓	✓		**aussen/outside Stahl/steel 52,0x45,5x12,0 mm**
22	59613HPS	31352227203		✓	✓	✓			✓	✓		231 mm ✓ **M3 3.0+3.2**
23	59621	33321138722		✓	✓	✓			✓	✓		**aussen/outside**
24	59638	33321092237		✓	✓	✓		✓	✓	✓		
25	19666/1	31121096685	✓		✓	✓			✓	✓		**aussen/outside Stahl/steel**
26	19666/2	**Kit : 2 x 19666/1**	✓		✓	✓			✓	✓		**aussen/outside Stahl/steel**
27	53670		✓		✓	✓			✓	✓		**axle kit**

BMW Z3 1995→

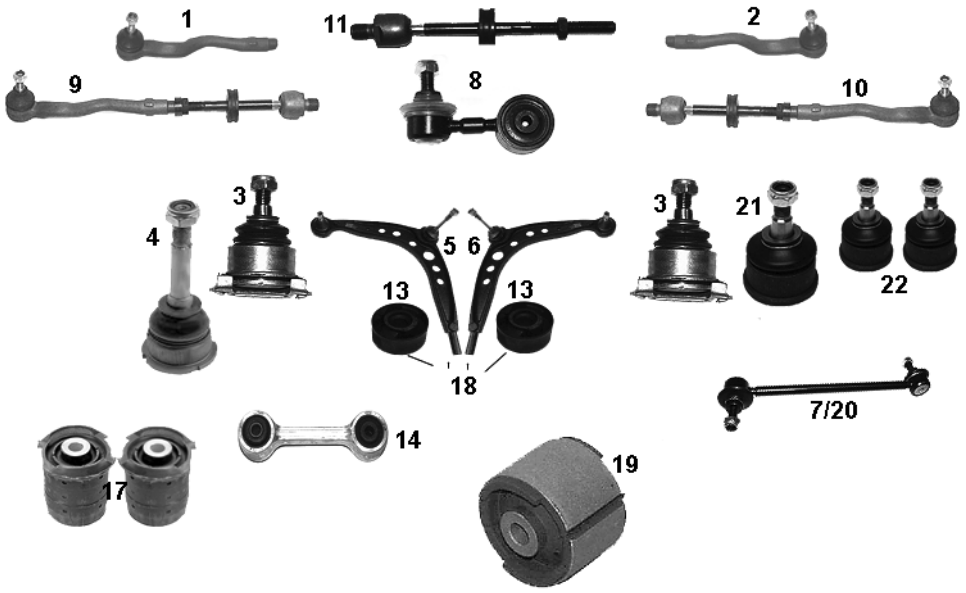

NR	MAPCO	REF								NEW	INFO
1	**19663**	32111139313 32111140489	✓		✓				✓	✓		M14x1,5RHT
2	**19664**	32111139314 32111140490	✓			✓			✓	✓		M14x1,5RHT
3	**19666HPS**	31121140398	✓		✓	✓			✓	✓		M12x1,5 / 36,5 mm
4	**19665**	31121139131	✓		✓	✓			✓	✓		M14x1,5 / 89,7 mm
5	**19670HPS**	31121140957 31121140399	✓		✓				✓	✓		
6	**19671HPS**	31121140958 31121140400	✓			✓			✓	✓		
7	**19678HPS**	31351134582	✓		✓	✓			✓			10/91→
8	**19667HPS**	31351091764 31351127689	✓		✓	✓			✓	✓		
9	**49782**	32111139315	✓		✓				✓	✓		367 mm
10	**49783**	32111139316	✓			✓			✓	✓		367 mm ✓  316i M40
11	**49785/1**	32111136133	✓		✓	✓			✓	✓		M14x1,5
13	**33847**	31129059288	✓		✓	✓			✓	✓		
14	**49786**	33551126932		✓	✓	✓			✓	✓		
17	**33692**	33319059300		✓	✓	✓			✓	✓		**12,5x60,5x77 mm**
17	**33692/2**	Kit : 2 x 33692		✓	✓	✓			✓	✓		**axle kit**
18	**53670**		✓		✓	✓			✓	✓		**axle kit**
19	**33934**	33321097009		✓	✓	✓			✓	✓		✓ **Längslenker** Aluminium
20	**59613HPS**	31352227203		✓	✓	✓			✓	✓		231 mm ✓ **3.2**
21	**19666/1**	31121096685	✓		✓	✓			✓	✓		**aussen/outside Stahl/steel**
22	**19666/2**	**Kit : 2 x 19666/1**	✓		✓	✓			✓	✓		**aussen/outside Stahl/steel**

BMW 3er (E46) 02/98→ 02/05

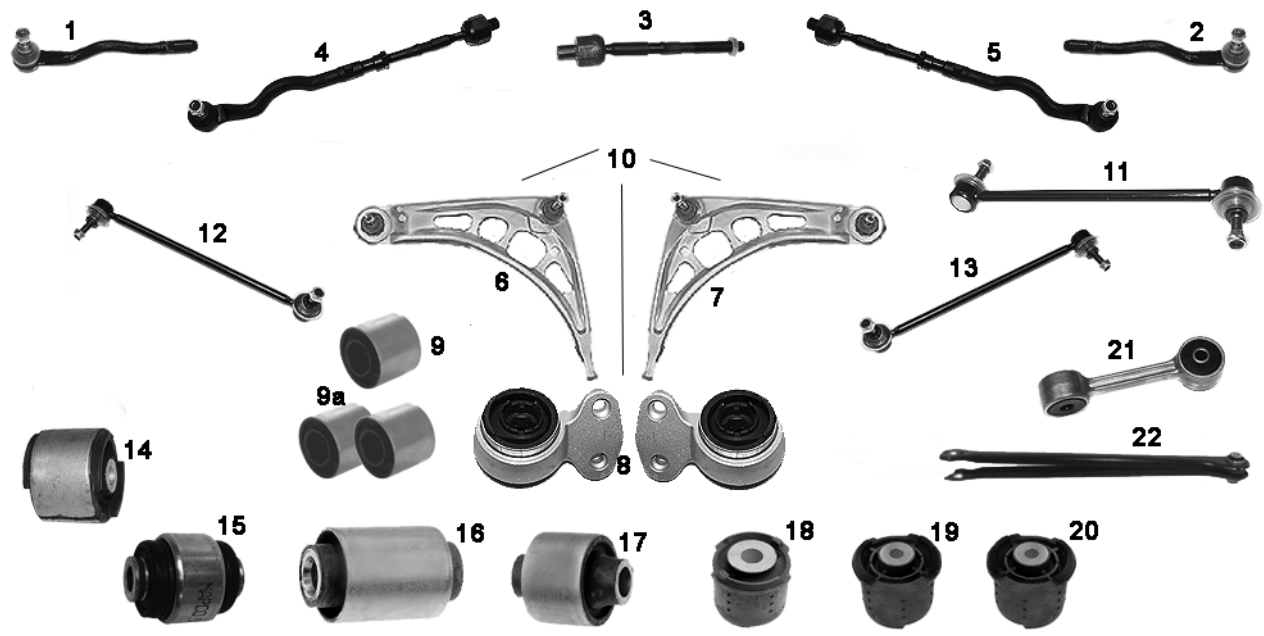

NR	MAPCO	REF								NEW	INFO
1	**49653**	32211095957	✓		✓				✓	✓	
2	**49654**	32211095958	✓			✓			✓	✓	
3	**19676**	32211095950	✓		✓	✓			✓	✓	M14x1,5 / M18x1,5
4	**19784**	32211095955	✓		✓				✓	✓	
5	**19785**	32211095956	✓			✓			✓	✓	
6	**49676/1**	31136751317	✓		✓				✓	✓	Aluminium
7	**49677/1**	31136751318	✓			✓			✓	✓	Aluminium **für Xenon-Licht**
8	**36660**	31121095278 31121096983	✓		✓	✓			✓	✓	**axle kit**
9	**33933**	31126750057	✓		✓	✓			✓	✓	✓ 1&2
9a	**33933/2**	31124000612	✓		✓	✓			✓	✓	**axle kit**
10	**53676**		✓		✓	✓			✓	✓	**axle kit**
11	**19700HPS**	31351095694	✓		✓	✓			✓	✓	**275 mm**
12	**51642HPS**	31356751079	✓		✓				✓	✓	✓ **308,0mm**
13	**51643HPS**	31356751080	✓			✓			✓	✓	✓ **308,0mm**
14	**33934**	33321097009		✓	✓	✓			✓	✓	✓ **Längslenker** Aluminium
15	**59621**	33321138722		✓	✓	✓			✓	✓	**aussen/outside**
16	**36661**	33321092248		✓	✓	✓			✓	✓	**Innen/inner Stahl/steel 52,0x40,0x12,0 mm**
17	**36662**	33321136311		✓	✓	✓			✓	✓	**aussen/outside Stahl/steel 52,0x45,5x12,0 mm**
18	**36664**	33311092517		✓	✓	✓			✓	✓	**Ø Innen/inner 20,5 mm Ø aussen/outside 72,0 mm**
19	**36665**	33311092515		✓	✓				✓	✓	
20	**36666**	33311092516		✓		✓			✓	✓	
21	**49799**	33551094619		✓	✓	✓			✓	✓	
22	**59638**	33321092237		✓	✓	✓		✓	✓	✓	

BMW Z4 (E85) 02/03→

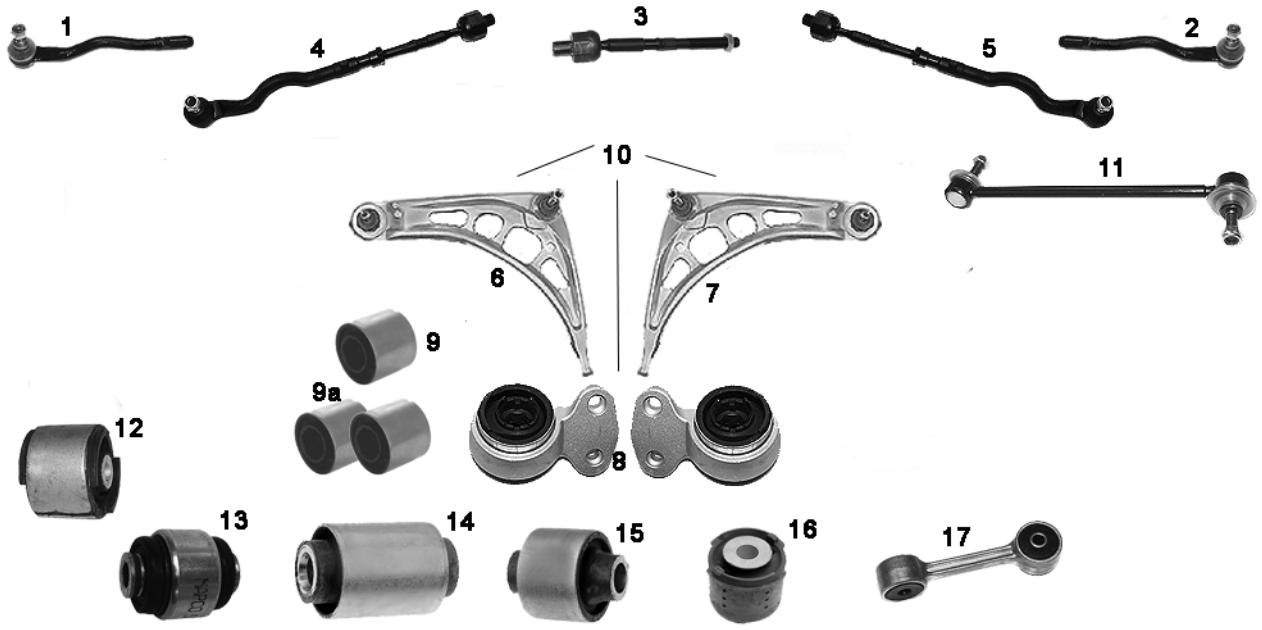

NR	MAPCO	REF			←	→	↑	↓			NEW	INFO
1	**49653**	32211095957	✓		✓				✓	✓		
2	**49654**	32211095958	✓			✓			✓	✓		
3	**19676**	32211095950	✓		✓	✓			✓	✓		M14x1,5 / M18x1,5
4	**19784**	32211095955	✓		✓				✓	✓		
5	**19785**	32211095956	✓			✓			✓	✓		
6	**49676/1**	31136751317	✓		✓				✓	✓		Aluminium
7	**49677/1**	31136751318	✓			✓			✓	✓		Aluminium **für Xenon-Licht**
8	**36660**	31121095278 31121096983	✓		✓	✓			✓	✓		**axle kit**
9	**33933**	31126750057	✓		✓	✓			✓	✓		✓ 1&2
9a	**33933/2**	31124000612	✓		✓	✓			✓	✓		**axle kit**
10	**53676**		✓		✓	✓			✓	✓		**axle kit**
11	**19700HPS**	31351095694	✓		✓	✓			✓	✓		**275 mm**
12	**33934**	33321097009		✓	✓	✓			✓	✓		✓ **Längslenker** Aluminium
13	**59621**	33321138722		✓	✓	✓			✓	✓		**aussen/outside**
14	**36661**	33321092248		✓	✓	✓			✓	✓		**Innen/inner Stahl/steel 52,0x40,0x12,0 mm**
15	**36662**	33321136311		✓	✓	✓			✓	✓		**aussen/outside Stahl/steel 52,0x45,5x12,0 mm**
16	**36664**	33311092517		✓	✓	✓			✓	✓		**Ø Innen/inner 20,5 mm Ø aussen/outside 72,0 mm**
17	**49799**	33551094619		✓	✓	✓			✓	✓		

BMW 3er (E9_) 01/05→

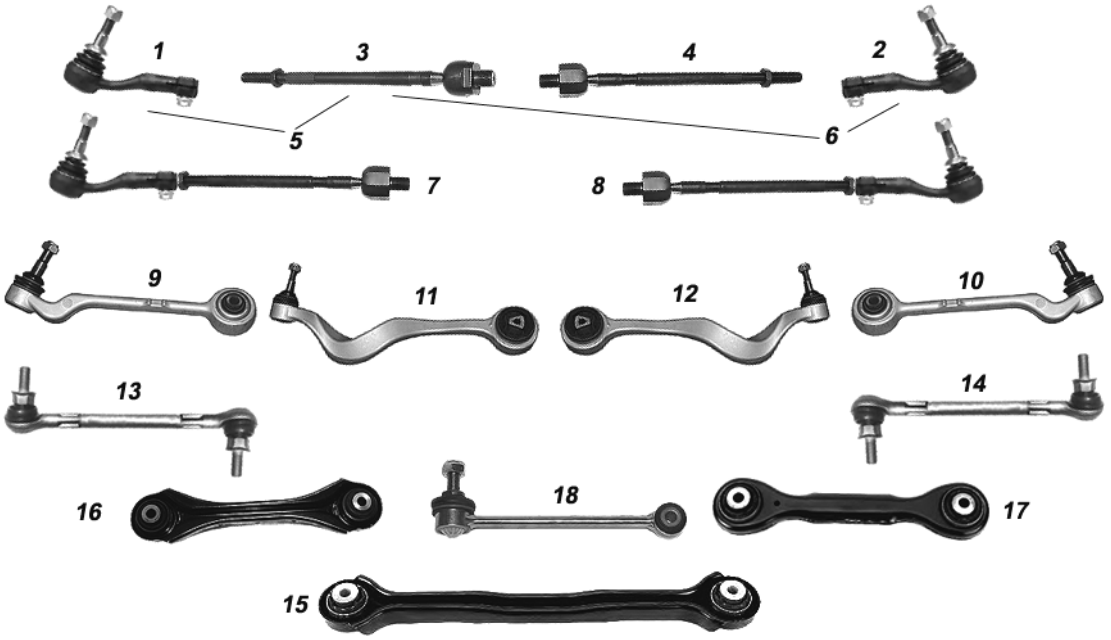

NR	MAPCO	REF									NEW	INFO
1	51667	32106765089	✓		✓				✓	✓	✓	TRW
2	51668	32106765090	✓			✓			✓	✓	✓	TRW
3	51653	No OEref	✓		✓	✓			✓	✓	✓	TRW
4	51654	No OEref	✓		✓	✓			✓	✓	✓	ZF
5	51655	32216762243	✓		✓				✓	✓	✓	TRW
6	51656	32216762244	✓			✓			✓	✓	✓	TRW
7	51665	32106765235	✓		✓				✓	✓	✓	ZF
8	51666	32106765236	✓			✓			✓	✓	✓	ZF
9	51634	31126763699	✓		✓			✓	✓	✓		Ø 16 mm
10	51635	31126763700	✓			✓		✓	✓	✓		Ø 16 mm
11	51648	31124036269	✓		✓			✓	✓	✓	✓	
12	51649	31124036270	✓			✓		✓	✓	✓	✓	
13	51657	31356765933	✓		✓				✓	✓	✓	
14	51658	31356765934	✓			✓			✓	✓	✓	
15	51651	33326763471		✓	✓	✓		✓	✓	✓	✓	
16	51650	33326763473		✓	✓	✓	✓		✓	✓	✓	
17	51652	33326765425		✓	✓	✓	✓		✓	✓	✓	241,0 mm
18	51659	33556764428		✓	✓	✓			✓	✓	✓	

BMW X3 (E83) 01/04→

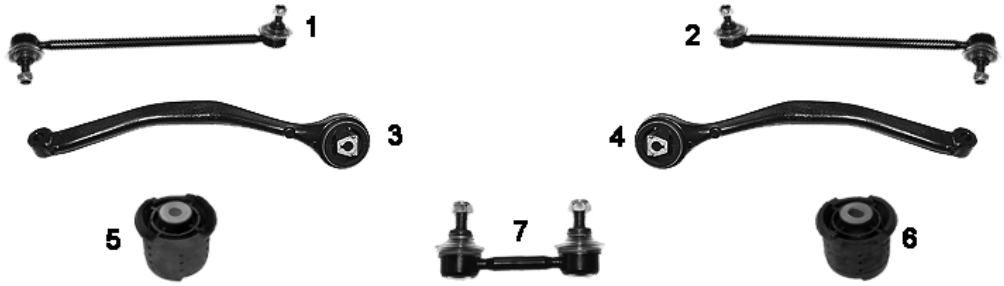

NR	MAPCO	REF								NEW	INFO
1	**51639HPS**	31303413201	✓		✓				✓	✓	✓	300,0 mm
2	**51640HPS**	31303413202	✓			✓			✓	✓	✓	300,0 mm
3	**51630**	31103412137		✓	✓			✓	✓	✓		
4	**51631**	31103412138		✓		✓		✓	✓	✓		
5	**36665**	33311092515		✓	✓				✓	✓		
6	**36666**	33311092516		✓		✓			✓	✓		
7	**51641HPS**	33503413197		✓	✓	✓			✓	✓	✓	95,0 mm

BMW Z4 (E89) sDrive 05/09→

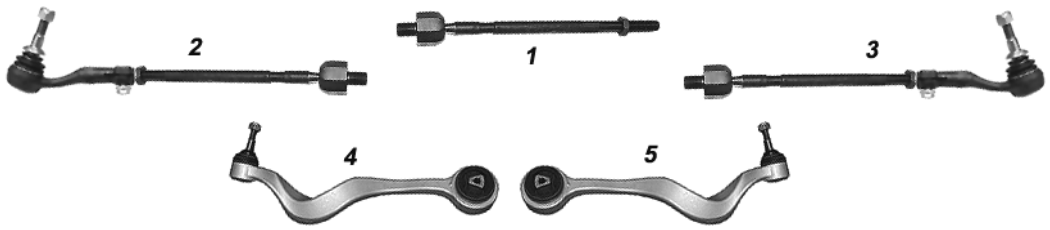

NR	MAPCO	REF								NEW	INFO
1	**51653**	No OE ref	✓		✓	✓			✓	✓	✓	**ZF**
2	**51665**	32106765235	✓		✓				✓	✓	✓	**ZF**
3	**51666**	32106765236	✓			✓			✓	✓	✓	**ZF**
4	**51648**	31124036269	✓		✓			✓	✓	✓	✓	
5	**51649**	31124036270	✓			✓		✓	✓	✓	✓	

BMW 5er (E28) 06/81 → 12/87
BMW 5er (E24) 06/82 → 08/89

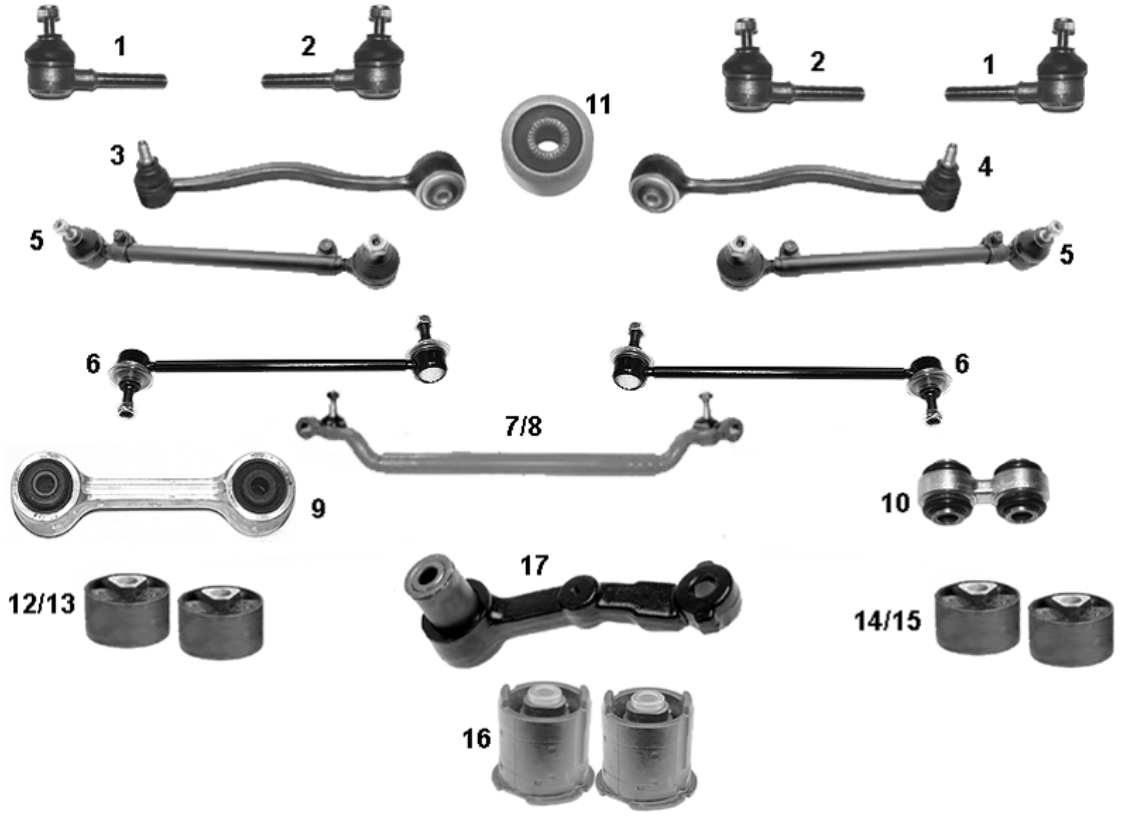

NR	MAPCO	REF			←	→	↑	↓			NEW	INFO
1	**19669**	32211135820	✓		✓	✓			✓	✓		M14x1,5RHT
2	**19668**	32211135819	✓		✓	✓			✓	✓		M14x1,5LHT
3	**19673**	31121131587 31121139991	✓		✓				✓	✓		
4	**19674**	31121131588 31121139992	✓			✓			✓	✓		
5	**19675**	32211135666	✓		✓	✓			✓	✓		
6	**19678HPS**	31351134582	✓		✓	✓			✓	✓		
7	**49730**	32211129014	✓		✓	✓			✓	✓		Ø 28 mm
8	**49731**	32211129017	✓		✓	✓			✓	✓		Ø 26 mm
9	**49786**	33551126932		✓	✓	✓			✓	✓		
10	**49788**	33321126476		✓	✓	✓			✓	✓		
11	**33691**	31121124622	✓		✓	✓			✓	✓		**für/ for 19673/74**
12	**33637**	31129058816	✓		✓	✓			✓	✓		✓ E28 518, 518i, 520i, 525e
13	**33637/2**	Kit : 2 x 33637	✓		✓	✓			✓	✓		✓ E28 518, 518i, 520i, 525e
14	**33641**	31129058818	✓		✓	✓			✓	✓		✓ **E28** 520i, 525e PRND , 525d+td, 525i, 528i
15	**33641/2**	Kit : 2 x 33641	✓		✓	✓			✓	✓		✓ **E28** 520i, 525e PRND , 525d+td, 525i, 528i
16	**33695**	33311130488		✓	✓	✓			✓	✓		**15x70x85 mm**
16	**33695/2**	Kit : 2 x 33695		✓	✓	✓			✓	✓		**axle kit 15x70x85 mm**
17	**49657**	32211136450	✓		✓	✓			✓	✓		

BMW 5er (E34) 01/88 → 01/97

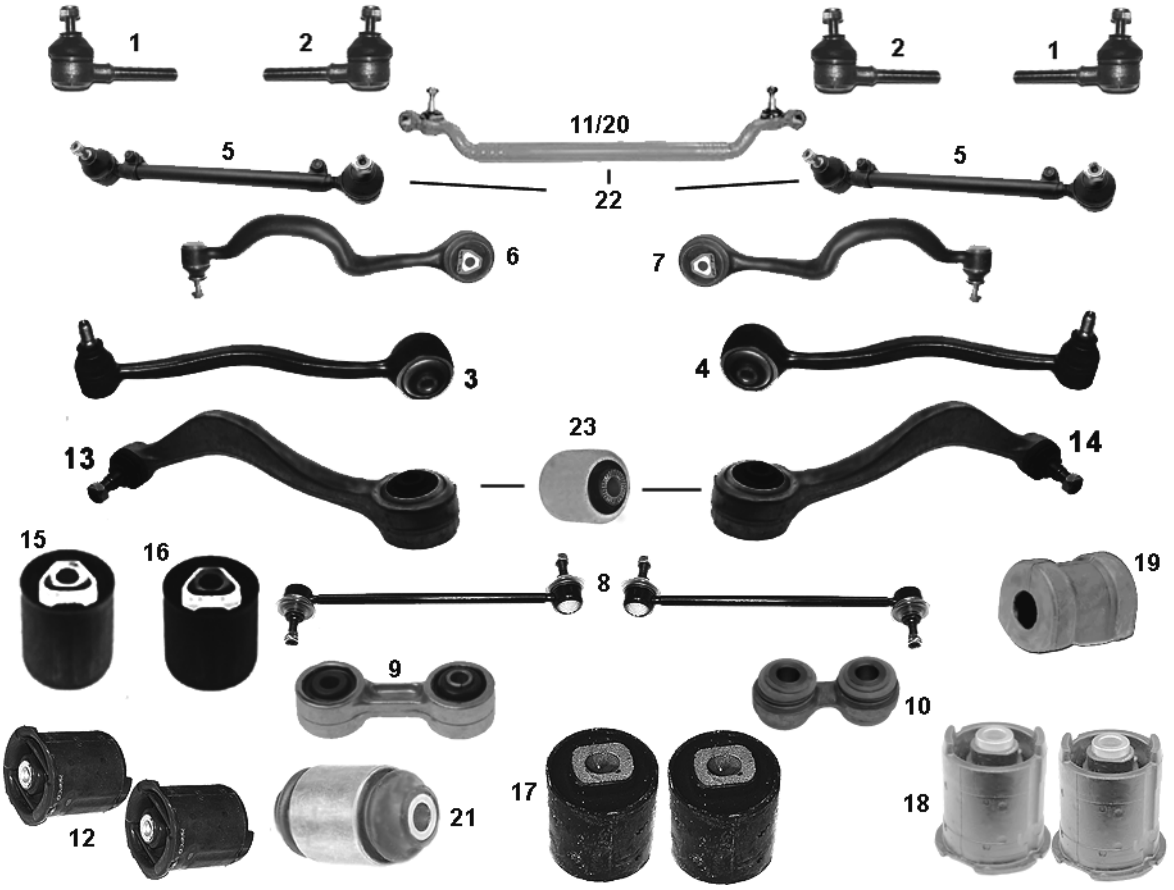

NR	MAPCO	REF								NEW	INFO
1	**19669**	32211135820	✓		✓	✓			✓	✓		M14x1,5RHT
2	**19668**	32211135819	✓		✓	✓			✓	✓		M14x1,5LHT
3	**19673**	31121131587	✓		✓				✓	✓		
4	**19674**	31121131588	✓			✓			✓	✓		
5	**19675**	32211135666	✓		✓	✓			✓	✓		
6	**19698**	31121141097	✓		✓		✓		✓	✓		
7	**19699**	31121141098	✓			✓	✓		✓	✓		
8	**19678HPS**	31351134582	✓		✓	✓			✓	✓		
9	**49787**	33551135307		✓	✓	✓			✓	✓		
10	**49788**	33321126476		✓	✓	✓			✓	✓		
11	**49660**	32211138854	✓		✓	✓			✓	✓		STOP **518i**
12	**33690**	33311129760		✓	✓	✓			✓	✓		**15 X 80 X 85 mm**
12	**33690/2**	**Kit : 2 x 33690**		✓	✓	✓			✓	✓		**axle kit 15 X 80 X 85 mm**
13	**49661**	31121139987	✓		✓				✓	✓		Aluminium
14	**49662**	31121139988	✓			✓			✓	✓		Aluminium
15	**33638**	31121136606	✓		✓	✓	✓		✓	✓		✓ 524TD, 525TD+TDS, 530i,535i,540i
16	**33639**	31121136605	✓		✓	✓	✓		✓	✓		✓ 520i, 525i
17	**33694**	33171131903		✓	✓	✓			✓	✓		**51 X 60 mm**
17	**33694/2**	**Kit : 2 x 33694**		✓	✓	✓			✓	✓		**axle kit 51 X 60 mm**
18	**33695**	33311130488		✓	✓	✓			✓	✓		**15 X 70 X 85 mm**
18	**33695/2**	**Kit : 2 x 33695**		✓	✓	✓			✓	✓		**axle kit 15 X 70 X 85 mm**
19	**33697**	31351133738	✓		✓	✓			✓	✓		
20	**19786**	32211136683	✓		✓	✓			✓	✓		✓ 518i + 518g
21	**36663**	33321135808		✓	✓	✓			✓	✓		
22	**59627**		✓		✓	✓			✓	✓		**(2x 19675 + 1x 49660)** STOP **518i**
23	**36670**	31121133236	✓		✓	✓		✓	✓	✓	✓	

BMW 5er (E39) 11/95→05/04

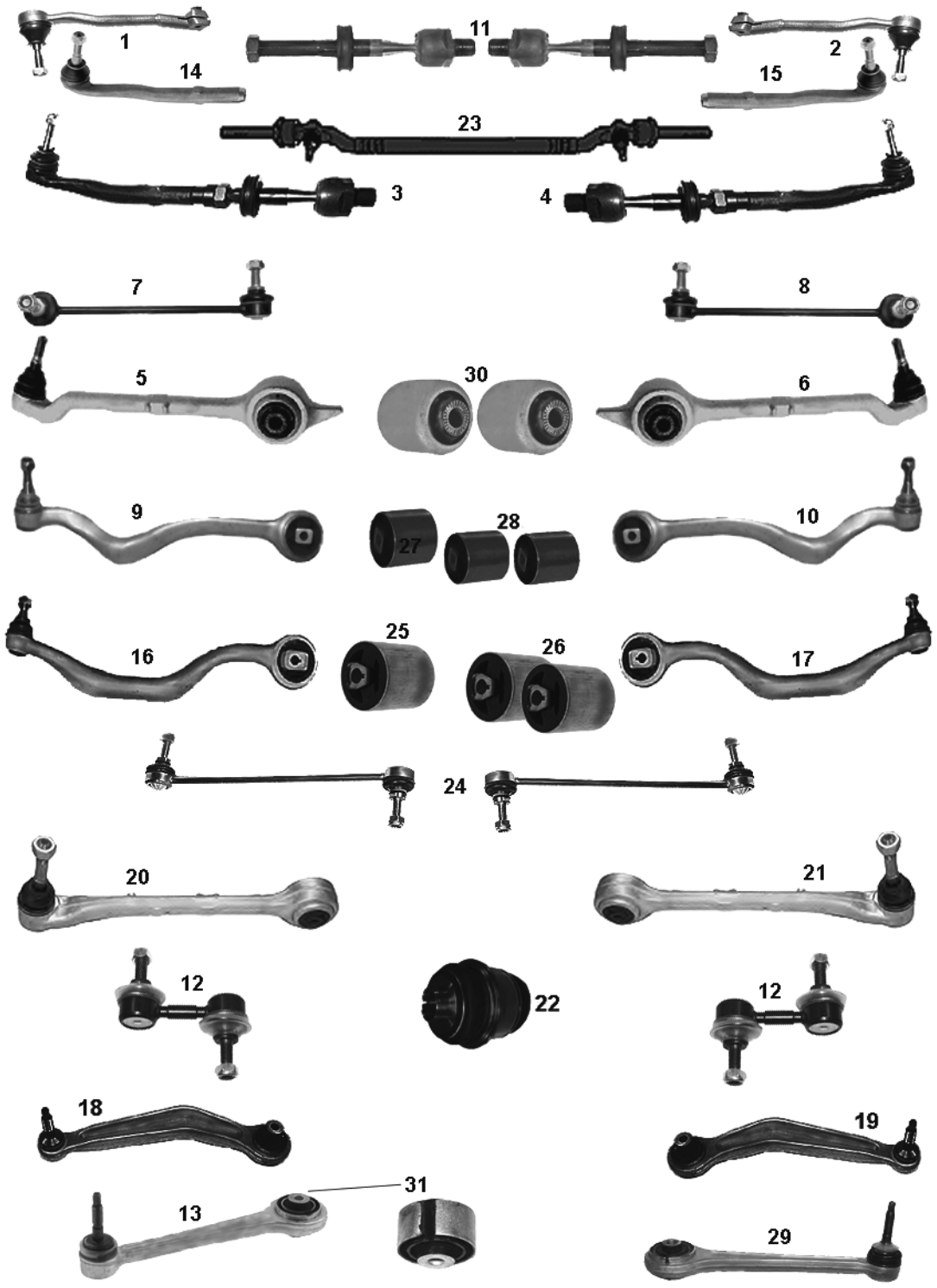

NR	MAPCO	REF								NEW	INFO
1	**49735**	32211091723	✓		✓				✓	✓		✓ 535i + 540i
2	**49736**	32211091724	✓			✓			✓	✓		✓ 535i + 540i
3	**49721**	32111094673	✓		✓				✓	✓		✓ 520i + 523 + 525 + 528
4	**49722**	32111094674	✓			✓			✓	✓		✓ 520i + 523 + 525 + 528
5	**49723**	31121093449	✓		✓			✓	✓	✓		Aluminium
6	**49724**	31121093450	✓			✓		✓	✓	✓		Aluminium

Fortsetzung / continued Seite/page 48

Fortsetzung / continued von/from Seite/page 47

BMW 5er (E39) 11/95→05/04

NR	MAPCO	REF										INFO
7	**49725HPS**	31351091855	✓		✓				✓	✓		
8	**49726HPS**	31351091856	✓			✓			✓	✓		
9	**49727**	31121141717	✓		✓		✓		✓	✓		
10	**49728**	31121141718	✓			✓	✓		✓	✓		
11	**49746**	32111091769	✓		✓	✓			✓	✓		
12	**49663HPS**	33551092292		✓	✓	✓			✓	✓		
13	**49652**	33321090745		✓	✓	✓	✓		✓	✓		
14	**19782**	32111091769	✓		✓				✓	✓		✓ 520i + 523 + 525 + 528
15	**19783**	32111091770	✓			✓			✓	✓		✓ 520i + 523 + 525 + 528
16	**59615**	31121092609	✓		✓		✓		✓	✓		
17	**59616**	31121092610	✓			✓	✓		✓	✓		
18	**59619**	33321090815		✓	✓			✓	✓	✓		
19	**59620**	33321090816		✓		✓		✓	✓	✓		
20	**59617**	31121141961	✓		✓			✓	✓	✓		
21	**59618**	31121141962	✓			✓		✓	✓	✓		
22	**59622**	33321090504		✓	✓	✓			✓	✓		
23	**59624**	32211096059	✓		✓	✓			✓	✓		**Linkslenker / LHD**
24	**59628**	31351095664	✓		✓	✓			✓	✓		✓ **535i + 540i, M5**
25	**36668**	31121141752	✓		✓	✓	✓		✓	✓		✓ **16 +17**
26	**36668/2**	**KIT 2x36668**	✓		✓	✓	✓		✓	✓		✓ **16 +17**
27	**33669**	31129068753	✓		✓	✓	✓		✓	✓		✓ **9+10**
28	**33669/2**	**KIT 2x33669**	✓		✓	✓	✓		✓	✓		✓ **9+10**
29	**59637**	33322282065		✓	✓	✓	✓		✓	✓		212,0mm 12/01-
30	**36687/2**	31121092019	✓		✓	✓		✓	✓	✓	✓	✓ **5+6**
31	**36688**	33321090102		✓	✓	✓	✓		✓	✓	✓	✓ **13**

BMW X5 (E53) 05/00→

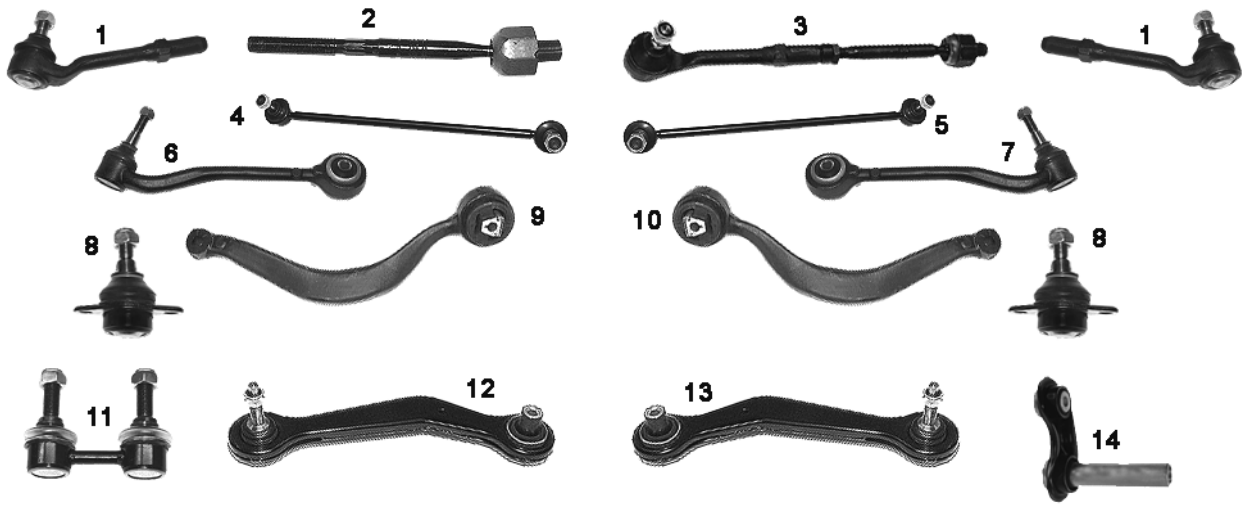

NR	MAPCO	REF								NEW	INFO
1	**59600**	32211096327	✓		✓	✓			✓	✓		
2	**59610**	32216751277	✓		✓	✓			✓	✓		M14 x 1,5 RHT
3	**59601**	32216751277	✓		✓	✓			✓	✓		
4	**59603HPS**	31356750703	✓		✓				✓	✓		
5	**59604HPS**	31356750704	✓			✓			✓	✓		
6	**59608**	31126760275	✓		✓		✓		✓	✓		
7	**59609**	31126760276	✓			✓	✓		✓	✓		
8	**59602**	31126756491	✓		✓	✓		✓	✓	✓		
9	**59606**	31121096169	✓		✓			✓	✓	✓		
10	**59607**	31121096170	✓			✓		✓	✓	✓		
11	**59605HPS**	33551096735		✓	✓	✓			✓	✓		
12	**59611**	33321095411		✓	✓				✓	✓		
13	**59612**	33321095412		✓		✓			✓	✓		
14	**51647**	33326770749		✓	✓	✓		✓	✓	✓	✓	

BMW 5er (E60,E61) 07/03→

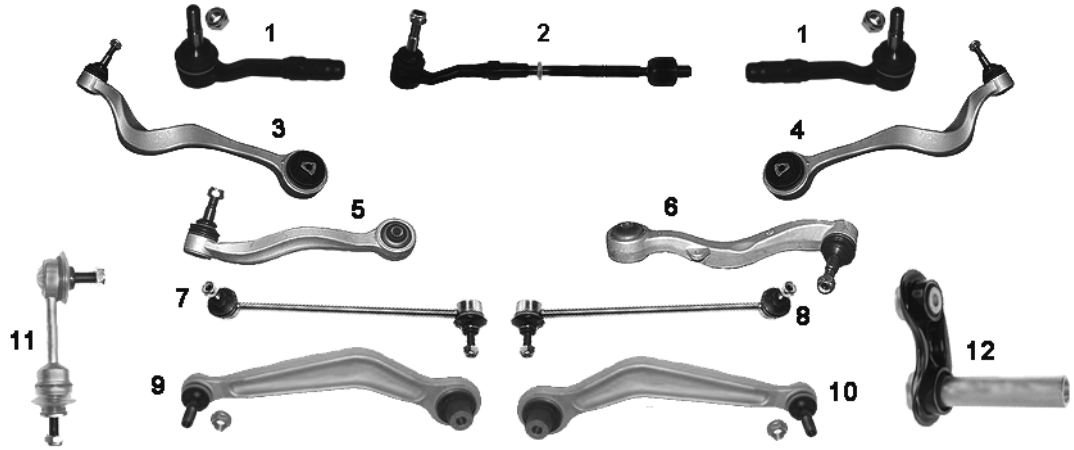

NR	MAPCO	REF								NEW	INFO
1	**59626**	32216756369	✓		✓	✓			✓	✓		M16x1,5RHT
2	**51638**	32216762403	✓		✓	✓			✓	✓		
3	**51636**	31126765995	✓		✓		✓		✓	✓		
4	**51637**	31126765996	✓			✓	✓		✓	✓		
5	**51632**	31126760181	✓		✓			✓	✓	✓		
6	**51633**	31126760182	✓			✓		✓	✓	✓		
7	**51644**	31354014531	✓		✓				✓	✓	✓	300,0 mm
8	**51645**	31354014532	✓			✓			✓	✓	✓	300,0 mm
9	**59635**	33326767759		✓	✓		✓		✓	✓		
10	**59636**	33326767760		✓		✓	✓		✓	✓		
11	**51646**	33556761000		✓	✓	✓			✓	✓	✓	132,0 mm
12	**51647**	33326770749		✓	✓	✓		✓	✓	✓	✓	

BMW 6er (E63) 01/04→

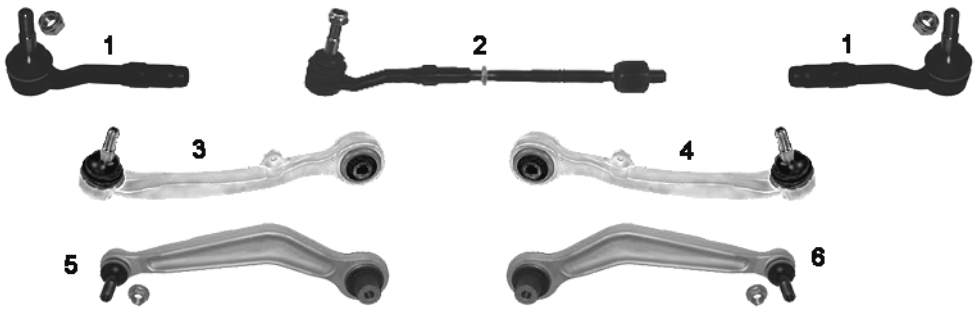

NR	MAPCO	REF								NEW	INFO
1	**59626**	32216756369	✓		✓	✓			✓	✓		M16x1,5RHT
2	**51638**	32216762403	✓		✓	✓			✓	✓		
3	**59629**	31126755835	✓		✓				✓	✓		**✓645 Ci**
4	**59630**	31126755836	✓			✓			✓	✓		**✓645 Ci**
5	**59635**	33326767759		✓	✓		✓		✓	✓		**✓645 Ci**
6	**59636**	33326767760		✓		✓	✓		✓	✓		**✓645 Ci**

BMW 7er (E32) 01/88→ 09/94

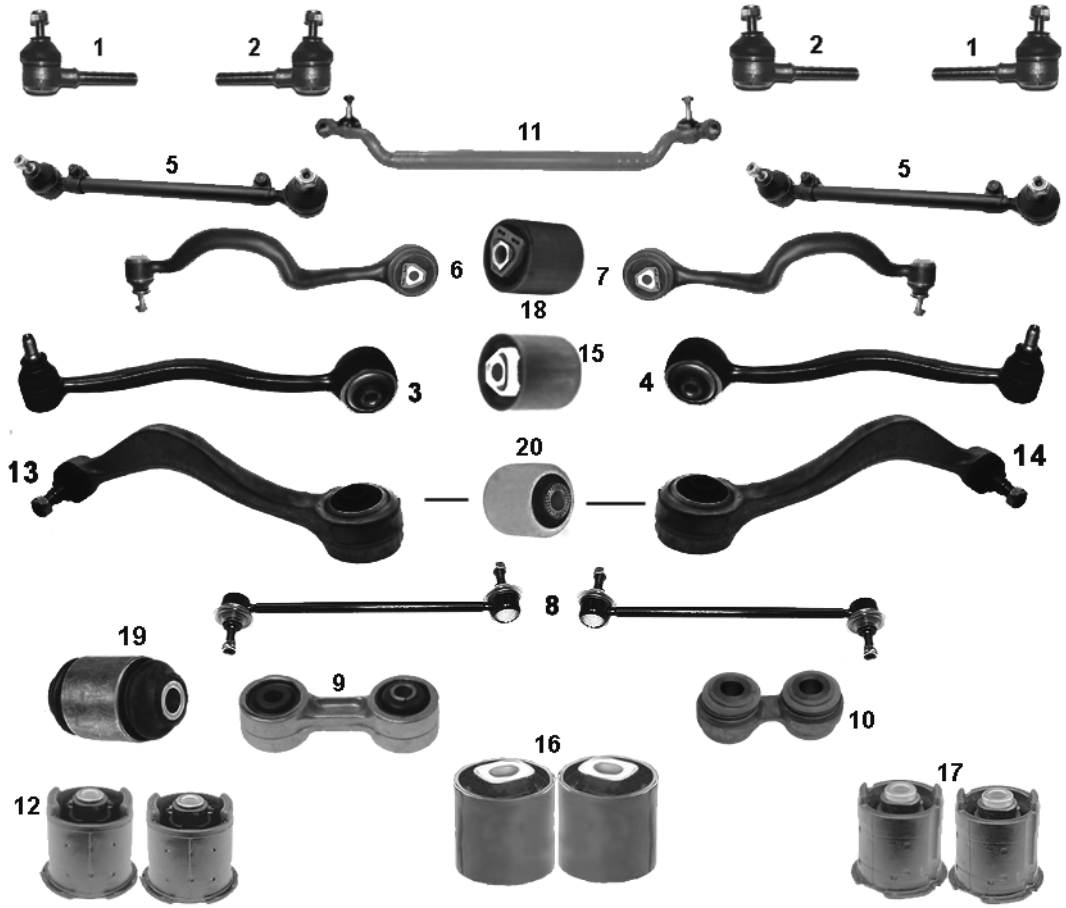

NR	MAPCO	REF								NEW	INFO
1	**19669**	32211135820	✓		✓	✓			✓	✓		M14x1,5RHT
2	**19668**	32211135819	✓		✓	✓			✓	✓		M14x1,5LHT
3	**19673**	31121131587	✓		✓				✓	✓		
4	**19674**	31121131588	✓			✓			✓	✓		
5	**19675**	32211135666	✓		✓	✓			✓	✓		
6	**49678**	31121139999	✓		✓		✓		✓	✓		
7	**49679**	31121140000	✓			✓	✓		✓	✓		
8	**19678HPS**	31351134582	✓		✓	✓			✓	✓		
9	**49787**	33551135307		✓	✓	✓			✓	✓		außen/outher
10	**49788**	33321126476		✓	✓	✓			✓	✓		innen/inner
11	**49658**	32211138850	✓		✓	✓			✓	✓		
12	**33690**	33311129760		✓	✓	✓			✓	✓		**15 X 80 X 85 mm**
12	**33690/2**	**Kit : 2 x 33690**		✓	✓	✓			✓	✓		**axle kit 15 X 80 X 85 mm**
13	**49661**	31121139987	✓		✓				✓	✓		Aluminium
14	**49662**	31121139988	✓			✓			✓	✓		Aluminium
15	**33638**	3112 1136 606 3112 1139 456	✓		✓	✓	✓		✓	✓		**✓ 730i, 735i**
16	**33694**	33171131903		✓	✓	✓			✓	✓		**51 X 60 mm**
16	**33694/2**	**Kit : 2 x 33694**		✓	✓	✓			✓	✓		**axle kit 51 X 60 mm**
17	**33695**	33311130488		✓	✓	✓			✓	✓		**15 X 70 X 85 mm**
17	**33695/2**	**Kit : 2 x 33695**		✓	✓	✓			✓	✓		**axle kit 15 X 70 X 85 mm**
18	**33666**	31121136607	✓		✓		✓		✓	✓		**✓ 730i, 735i, 740i (grün)**
19	**36663**	33321135808		✓	✓	✓			✓	✓		
20	**36670**	31121133236	✓		✓	✓		✓	✓	✓	✓	

BMW 7er (E38) 10/94→ 11/01

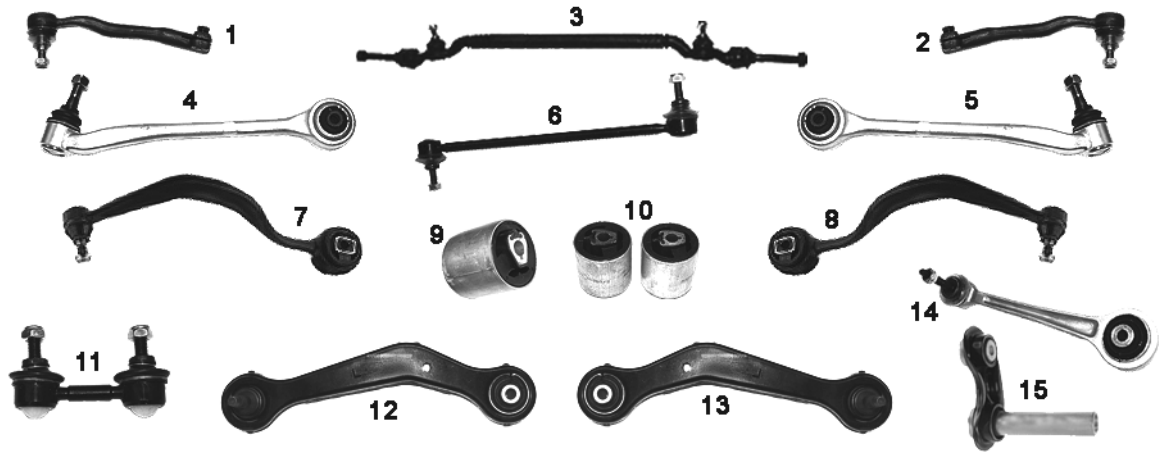

NR	MAPCO	REF			←	→	↑	↓			NEW	INFO
1	**49739**	32211141345	✓		✓				✓	✓		M16x1,5
2	**49740**	32211141346	✓			✓			✓	✓		M16x1,5
3	**49741**	32211096057	✓		✓	✓			✓	✓		
4	**49694**	31121142087	✓		✓				✓	✓		Aluminium
5	**49695**	31121142088	✓			✓			✓	✓		Aluminium
6	**49795HPS**	31351095695	✓		✓	✓			✓	✓		
7	**49650**	31121141723	✓		✓		✓		✓	✓		
8	**49651**	31121141724	✓			✓	✓		✓	✓		
9	**36668**	31121141752	✓		✓	✓	✓		✓	✓		✓ **7 + 8**
10	**36668/2**	**KIT 2x36668**	✓		✓	✓	✓		✓	✓		✓ **7 + 8**
11	**49796**	33551091497		✓	✓	✓			✓	✓		
12	**49655**	33321090905		✓	✓				✓	✓		
13	**49656**	33321090906		✓		✓			✓	✓		
14	**49652**	33321090745		✓	✓	✓	✓		✓	✓		
15	**51647**	33326770749		✓	✓	✓		✓	✓	✓	✓	

BMW 7er (E65, E66) 11/01→

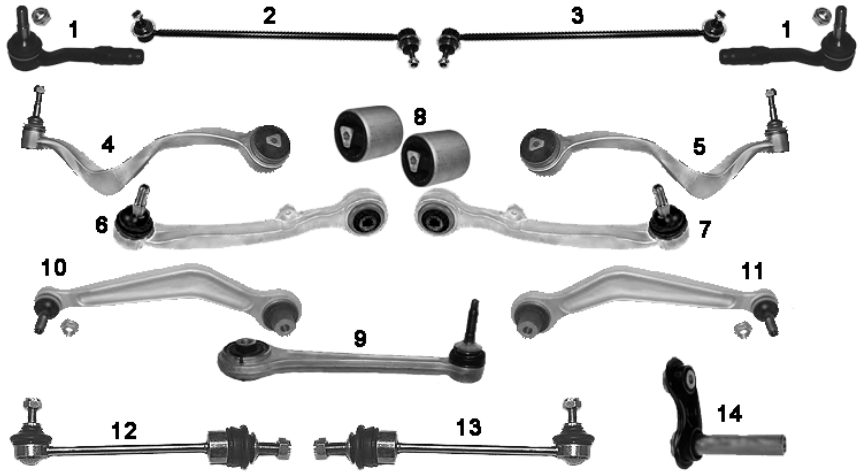

NR	MAPCO	REF								NEW	INFO
1	**59626**	32216756369	✓		✓	✓			✓	✓		M16x1,5RHT
2	**59623HPS**	31356753767	✓		✓				✓	✓		426 mm
3	**59631HPS**	31356753768	✓			✓			✓	✓		
4	**59633**	31124026453	✓		✓		✓		✓	✓		
5	**59634**	31124026454	✓			✓	✓		✓	✓		
6	**59629**	31126755835	✓		✓				✓	✓		
7	**59630**	31126755836	✓			✓			✓	✓		
8	**36689**	31120304308	✓		✓	✓			✓	✓	✓	
9	**59637**	33322282065		✓	✓	✓	✓		✓	✓		212 mm
10	**59635**	33326767759		✓	✓		✓		✓	✓		
11	**59636**	33326767760		✓		✓	✓		✓	✓		
12	**59632**	33556757460		✓	✓	✓	✓		✓	✓		212 mm
13	**59639**	33556753770		✓	✓	✓			✓			✓ dynamic drive
14	**51647**	33326770749		✓	✓	✓		✓	✓	✓	✓	

BMW 8er (E31) 08/89→12/99



NR	MAPCO	REF								NEW	INFO
1	**19669**	32211135820	✓		✓	✓			✓	✓		M14x1,5RHT
2	**19668**	32211135819	✓		✓	✓			✓	✓		M14x1,5LHT
3	**19678HPS**	31351134582	✓		✓	✓			✓	✓		
4	**33666**	31121136607	✓		✓	✓	✓		✓	✓		**(grün)**
5	**49678**	31121139999	✓		✓		✓		✓	✓		
6	**49679**	31121140000	✓			✓	✓		✓	✓		

CHEVROLET

CHEVROLET AVEO 03/06→



NR	MAPCO	REF			←	→	↑	↓			NEW	INFO
1	**51298**	93740722	✓		✓				✓		✓	M12x1,25
2	**51299**	93740723	✓			✓			✓		✓	M12x1,25
3	**51296**	96535081	✓		✓			✓	✓	✓	✓	
4	**51297**	96535082	✓			✓		✓	✓	✓	✓	
5	**51300**	96535089	✓		✓	✓		✓	✓	✓	✓	M12x1,25
6	**33574**	96653381	✓		✓	✓		✓	✓	✓	✓	
7	**33575**	96535087	✓		✓	✓		✓	✓	✓	✓	
8	**19558HPS**	96391875	✓		✓	✓			✓	✓		264,0 mm

CHEVROLET CAPTIVA 06/06→



NR	MAPCO	REF			←	→	↑	↓			NEW	INFO
1	**51301**	9662 6667 part	✓		✓	✓			✓	✓	✓	
2	**51302**	4806304	✓		✓				✓	✓	✓	
3	**51303**	4806305	✓			✓			✓	✓	✓	

CHEVROLET KALOS 03/05→

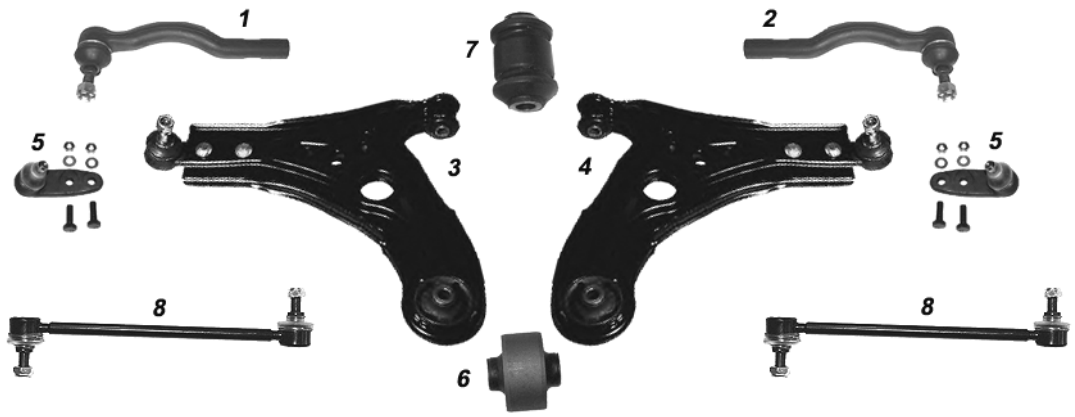

NR	MAPCO	REF									NEW	INFO
1	**51298**	93740722	✓		✓				✓		✓	M12x1,25
2	**51299**	93740723	✓			✓			✓		✓	M12x1,25
3	**51296**	96535081	✓		✓			✓	✓	✓	✓	
4	**51297**	96535082	✓			✓		✓	✓	✓	✓	
5	**51300**	96535089	✓		✓	✓		✓	✓	✓	✓	M12x1,25
6	**33574**	96653381	✓		✓	✓		✓	✓	✓	✓	
7	**33575**	96535087	✓		✓	✓		✓	✓	✓	✓	
8	**19558HPS**	96391875	✓		✓	✓			✓	✓		264,0 mm

CHEVROLET LACETTI 03/05→

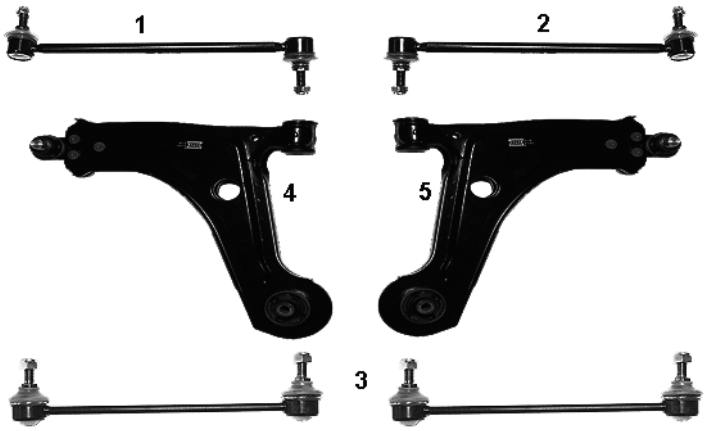

NR	MAPCO	REF									NEW	INFO
1	**51290HPS**	96403099	✓		✓				✓	✓		
2	**51291HPS**	96403100	✓			✓			✓	✓		
3	**51293HPS**	96561754		✓	✓	✓			✓	✓		
4	**51294**	96415063	✓		✓			✓	✓	✓	✓	
5	**51295**	96415064	✓			✓		✓	✓	✓	✓	

CHEVROLET NUBIRA 03/05→

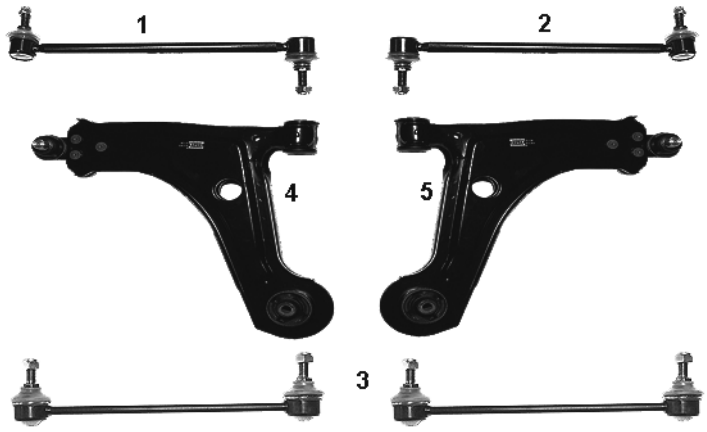

NR	MAPCO	REF									NEW	INFO
1	**51290HPS**	96403099	✓		✓				✓	✓		
2	**51291HPS**	96403100	✓			✓			✓	✓		
3	**51293HPS**	96561754		✓	✓	✓			✓	✓		
4	**51294**	96415063	✓		✓			✓	✓	✓	✓	
5	**51295**	96415064	✓			✓		✓	✓	✓	✓	

CHEVROLET REZZO 03/05→



NR	MAPCO	REF									NEW	INFO
1	**19558HPS**	96391875	✓		✓	✓			✓	✓		264,0 mm

CHRYSLER

CHRYSLER 300C 09/04→

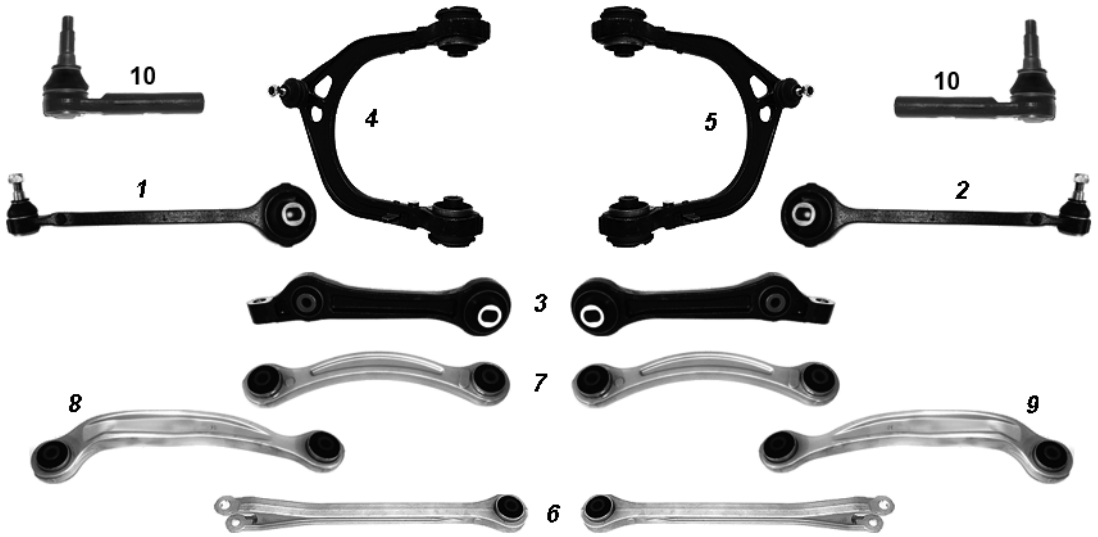

NR	MAPCO	REF									NEW	INFO
1	**59939**	DA782613AC	✓		✓			✓	✓			
2	**59940**	DA782612AC	✓			✓		✓	✓			
3	**59941**	DA782561AE	✓		✓	✓		✓	✓			
4	**59943**	DA782665AB	✓		✓		✓		✓			
5	**59942**	DA782666AB	✓			✓	✓		✓			
6	**59938**	DA782836AB		✓	✓	✓		✓	✓			
7	**59935**	DA782745AB		✓	✓	✓	✓		✓			
8	**59937**	DA782537AB		✓	✓		✓		✓			
9	**59936**	DA782536AB		✓		✓	✓		✓			
10	**59944**	52013468AB	✓		✓	✓			✓		✓	

CHRYSLER CIRRUS 05/94→09/00

NR	MAPCO	REF									NEW	INFO
1	**59932**	4695626	✓		✓	✓			✓	✓	✓	 1

CHRYSLER NEON (PL) 05/94→08/99

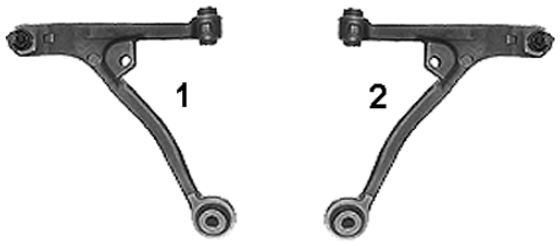

NR	MAPCO	REF									NEW	INFO
1	**49936**	4509775	✓		✓				✓	✓	✓	
2	**49937**	4509774	✓			✓			✓	✓	✓	

CHRYSLER NEON II 1.6 — 11/01→
CHRYSLER NEON II 2.0 16V — 08/99 →



NR	MAPCO	REF									NEW	INFO
1	**49930**	5272237AC	✓		✓				✓	✓		
2	**49931**	5272236AC	✓			✓			✓	✓		

CHRYSLER PT CRUISER Cabriolet — 03/04→
CHRYSLER PT CRUISER (PT_) — 11/01 →



NR	MAPCO	REF									NEW	INFO
1	**59930**	4656731AH	✓		✓				✓	✓		
2	**59931**	4656730AH	✓			✓			✓	✓		

CHRYSLER SEBRING (JR) — 04/01→

NR	MAPCO	REF									NEW	INFO
1	**59932**	4695626	✓		✓	✓			✓	✓	✓	1 

CHRYSLER STRATUS (JA)
CHRYSLER STRATUS Cabriolet (JX)

12/95→
06/96→04/01

NR	MAPCO	REF									NEW	INFO
1	**59932**	4695626	✓		✓	✓			✓	✓	✓	 1

CHRYSLER VOYAGER II (GS)

01/95→03/01

NR	MAPCO	REF									NEW	INFO
1	**49938HPS**	4743454AA	✓		✓	✓			✓	✓	✓	 1

CHRYSLER VOYAGER III (RG)

02/00→

NR	MAPCO	REF									NEW	INFO
1	**49938HPS**	4743454AA	✓		✓	✓			✓	✓	✓	 1

CITROËN

CITROËN 2CV, AMI, DYANE, ACADIANE, MEHARI 03/63→07/90

NR	MAPCO	REF			←	→	↑	↓			NEW	INFO
1	**19416**	5451858	✓		✓	✓			✓	✓		 

CITROËN AX Chassis 4803 -> 01/90→12/98


1


2


3

NR	MAPCO	REF			←	→	↑	↓			NEW	INFO
1	**36402**		✓		✓	✓			✓	✓		
2	**36404**		✓		✓	✓			✓	✓		
3	**36405**		✓		✓	✓			✓	✓		

CITROËN AX 06/86→12/98

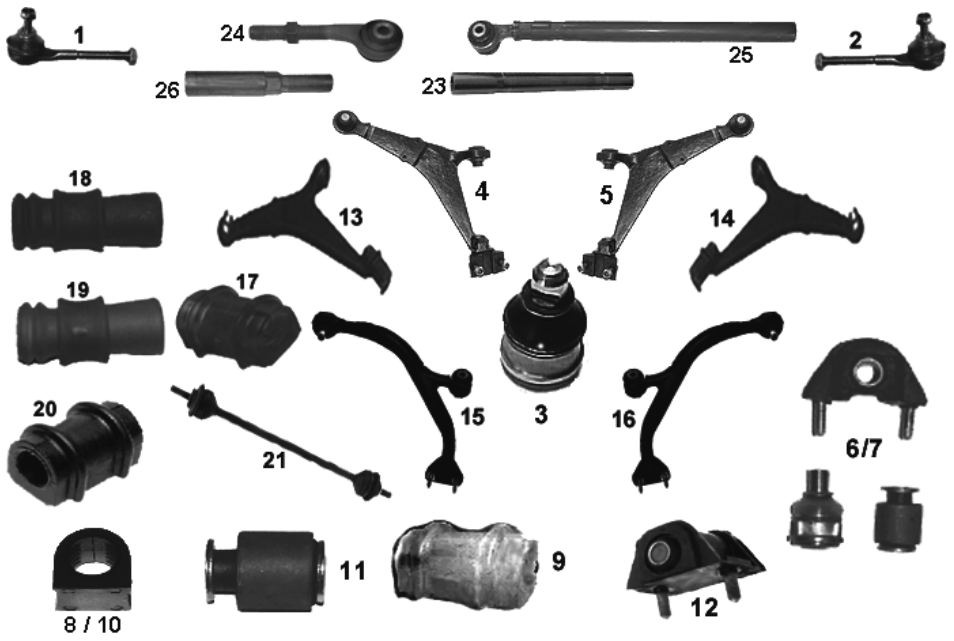



NR	MAPCO	REF								NEW	INFO
1	**19417**	9471000565 381741	✓		✓				✓	✓		M14x1,5RHT
2	**19418**	9471000665 381742	✓			✓			✓	✓		M14x1,5RHT
3	**19419**	95603309	✓		✓	✓			✓	✓		(Ø 14 mm) →03/91
3	**19428**	96093233 0000364036	✓		✓	✓			✓	✓		(Ø 16 mm) 04/91→
4	**19321**	95658978	✓		✓				✓	✓		(Ø 16 mm) 04/91→
5	**19322**	95658979	✓			✓			✓	✓		(Ø 16 mm) 04/91→
6	**19248**		✓		✓	✓			✓	✓		Kit 04/91→
7	**19249**		✓		✓	✓			✓	✓		Kit →03/91
8	**33400**	96064489	✓		✓	✓			✓	✓		(Ø 19 mm)
9	**33402**	96064481	✓		✓	✓			✓	✓		
10	**33409**	96064491	✓		✓	✓			✓	✓		(Ø 21 mm)
11	**33414**	95603308	✓		✓	✓			✓	✓		
12	**33415**	96106474	✓		✓	✓			✓	✓		
13	**19472**	96133608	✓		✓				✓	✓		(Ø 14 mm) →03/91
14	**19471**	96133609	✓			✓			✓	✓		(Ø 14 mm) →03/91
15	**19360**	352080	✓		✓				✓	✓		04/91→
16	**19361**	352081	✓			✓			✓	✓		04/91→
17	**33323**	509457	✓		✓	✓			✓	✓		21mm
18	**33324**	509459	✓		✓	✓			✓	✓		19mm
19	**33325**	509460	✓		✓	✓			✓	✓		20mm
20	**33420**	96054481	✓		✓	✓			✓	✓		19mm
21	**19476HPS**	508733	✓		✓	✓			✓	✓		✓ 1.4Gti 300 mm
22	**95321**		✓		✓	✓			✓	✓		MS
23	**19480**	3812A0	✓		✓	✓			✓	✓		M14x1,5
24	**19481**	381732	✓		✓					✓		M14x1,5LHT
25	**19482**	381735	✓			✓				✓		M14x1,5LHT
26	**19483**	381734	✓		✓	✓				✓		12,0mm, M14x1,5RHT, 132,0mm

CITROËN BERLINGO (MF) 07/96→

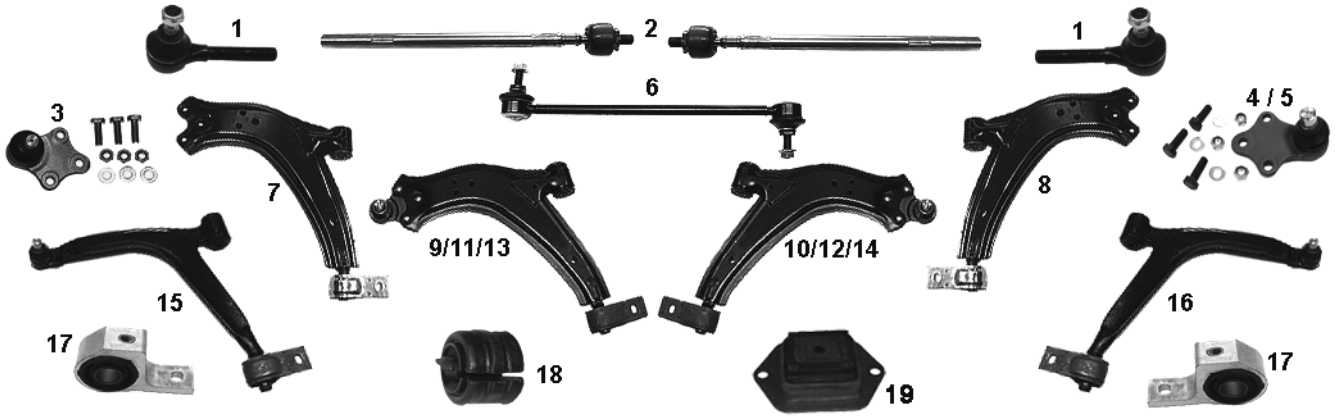

NR	MAPCO	REF			←	→	↑	↓			NEW	INFO
1	**19301**	381750	✓		✓	✓			✓	✓		M14x1,5RHT
2	**19411**	3812C0	✓		✓	✓			✓	✓		
3	**19427**	364038	✓		✓	✓				✓		Chassis → O 7972 16 mm
4	**19473**	364051	✓		✓	✓			✓			Chassis O 7973 → 18 mm
5	**19389**	364050	✓		✓	✓				✓		Chassis O 7973 → 18 mm
6	**19337HPS**	508739	✓		✓	✓			✓	✓		
7	**19331/1**	3520E0	✓		✓				✓	✓		
8	**19332/1**	352190	✓			✓			✓	✓		
9	**19437**	3520F6	✓		✓					✓		✓ **1.1 - 1.4** Chassis→ O 7972, 16 mm
10	**19438**	3521F6	✓			✓				✓		✓ **1.1 - 1.4** Chassis→ O 7972, 16 mm
11	**19439**	3520F7	✓		✓				✓			Chassis→ O 7972 16 mm
12	**19440**	3521A7	✓			✓			✓			Chassis→ O 7972 16 mm
13	**19474**	3520H5	✓		✓				✓	✓		Chassis O 7973 → 18 mm
14	**19475**	3521E5	✓			✓			✓	✓		Chassis O 7973 → 18 mm
15	**19485**	3520J3	✓		✓				✓	✓		✓ **2.0 HDI 90** 12/99→
16	**19486**	3521F3	✓			✓			✓	✓		✓ **2.0 HDI 90** 12/99→
17	**33431**	352383	✓		✓	✓			✓	✓		✓ **2.0 HDI 90** 12/99→
18	**33424**	509465	✓		✓	✓			✓	✓		Ø 21 mm
19	**33433**	515262		✓	✓	✓			✓	✓	✓	

CITROËN BERLINGO 04/08→



NR	MAPCO	REF			←	→	↑	↓			NEW	INFO
1	**49401**	3812 F4	✓		✓	✓			✓	✓	✓	
2	**19372**	3640 68	✓		✓	✓			✓	✓		
3	**19383**	3520 K8	✓		✓				✓	✓		18,0 mm
4	**19384**	3521 G8	✓			✓			✓	✓		18,0 mm
5	**33336**	3523 92	✓		✓	✓			✓	✓		
6	**33434**	3523 91	✓		✓	✓			✓	✓	✓	

CITROËN BX 09/82→12/94

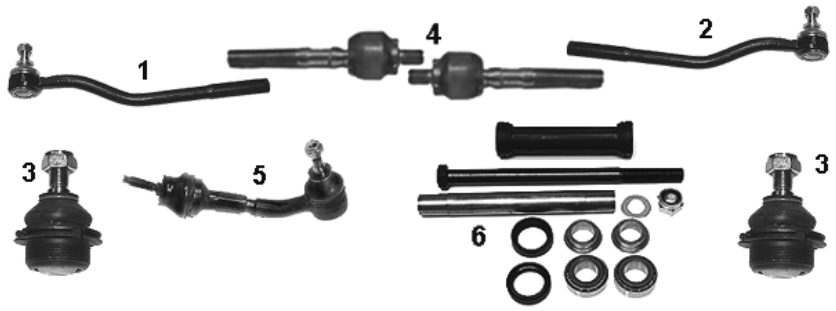

NR	MAPCO	REF								NEW	INFO
1	**19413**	95496044	✓		✓				✓	✓		M14x1,5RHT
2	**19414**	95496045	✓			✓			✓	✓		M14x1,5RHT
3	**19415**	95494204	✓		✓	✓			✓	✓		
4	**19412**	95395440	✓		✓	✓			✓	✓		M14x1,5RHT M12x1,2RHT
5	**19470**	95597955	✓		✓	✓			✓	✓		
6	**34413**	95619159		✓	✓	✓			✓	✓		

CITROËN C15 Benzin/ petrol 05/88→12/97

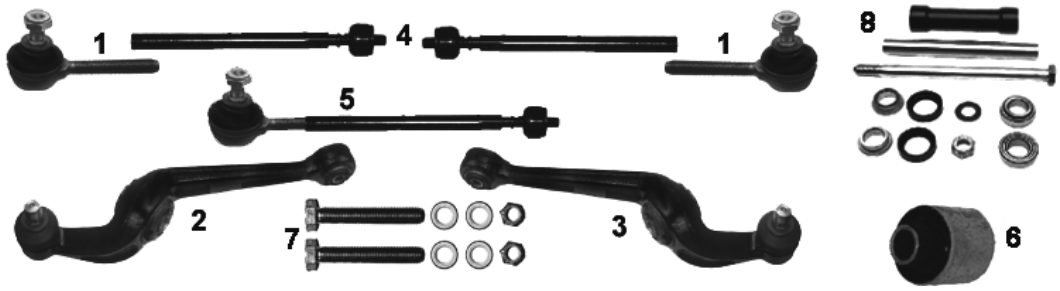

NR	MAPCO	REF								NEW	INFO
1	**19301**	381750	✓		✓	✓			✓	✓		M14x1,5RHT
2	**19310**	91516336	✓		✓				✓	✓		D Chassis 4196→
3	**19311**	91516337	✓			✓			✓	✓		D Chassis 4196→
4	**19355/1**	95560858	✓		✓	✓			✓	✓		M14x1,50RHT 262 mm
5	**19355**	381215	✓		✓	✓			✓	✓		**1 + 4**
6	**33307**	352320	✓		✓	✓			✓	✓		
7	**95310**		✓		✓	✓			✓	✓		MS
8	**34413**	95619159		✓	✓	✓			✓	✓		HA

CITROËN C15 D — 1984→12/97

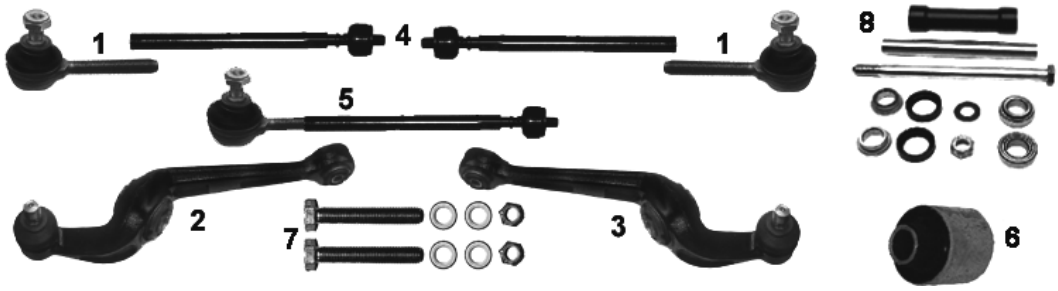

NR	MAPCO	REF								NEW	INFO
1	**19301**	381750	✓		✓	✓			✓	✓		M14x1,5RHT
2	**19310**	91516336	✓		✓				✓	✓		D Chassis 4196→
3	**19311**	91516337	✓			✓			✓	✓		D Chassis 4196→
4	**19446/1**	96136394	✓		✓	✓			✓	✓		M14x1,50RHT 314mm
5	**19446**	381295	✓		✓	✓			✓	✓		**1 + 4**
6	**33307**	352320	✓		✓	✓			✓	✓		
7	**95310**		✓		✓	✓			✓	✓		MS
8	**34413**	95619159		✓	✓	✓			✓	✓		HA

CITROËN C15 600 Kg 954cc, 1.1+1.4 Ch. 4196→ — 05/88→ 07/95
CITROËN C15 1.8D 600 Kg — 11/84→ 07/95

NR	MAPCO	REF								NEW	INFO
1	**36304**		✓		✓	✓			✓	✓		

CITROËN C25 — 07/81→03/94

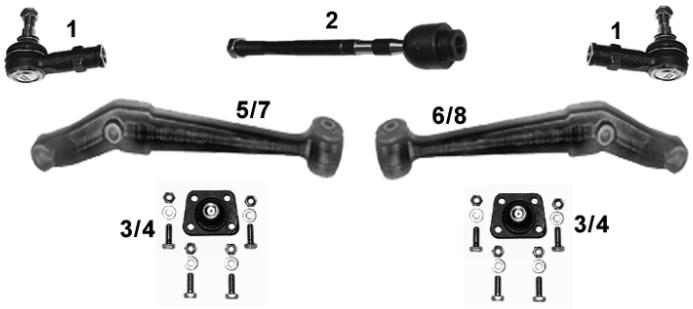

NR	MAPCO	REF								NEW	INFO
1	**19420**	9750390080	✓		✓	✓			✓	✓		M16x1,5RHT
2	**19405**	364017	✓		✓					✓		M16x1,5RHT
3	**19421**	4388159	✓			✓			✓	✓		(Ø 16 mm) →09/85
4	**19422**	364026	✓		✓	✓			✓	✓		(Ø 17 mm) 10/85→
5	**19441**	7576732	✓		✓				✓	✓		10/85→93 (1.0-1.4t)
6	**19442**	7576731	✓			✓			✓	✓		10/85→93 (1.0-1.4t)
7	**19468**	7567283	✓		✓				✓	✓		10/85→93 (1.8t)
8	**19469**	7567282	✓			✓			✓	✓		10/85→93 (1.8t)

CITROËN C1 (PM_, PN_) 06/05→

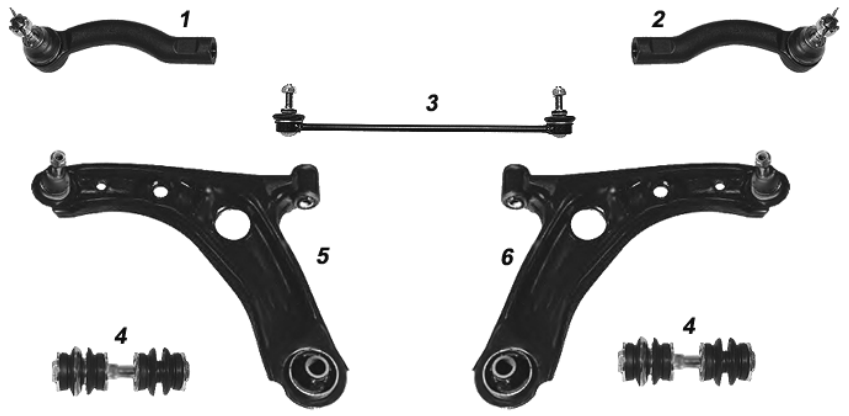

NR	MAPCO	REF									NEW	INFO
1	**49306**	381763	✓		✓				✓	✓	✓	
2	**49307**	381764	✓			✓			✓	✓	✓	
3	**19348HPS**	508759	✓		✓	✓			✓	✓		335,0 mm
4	**49308**	509110	✓		✓	✓			✓	✓	✓	
5	**49318**	3520Q2	✓		✓				✓	✓	✓	
6	**49319**	3521L3	✓			✓			✓	✓	✓	

CITROËN C2 09/03→

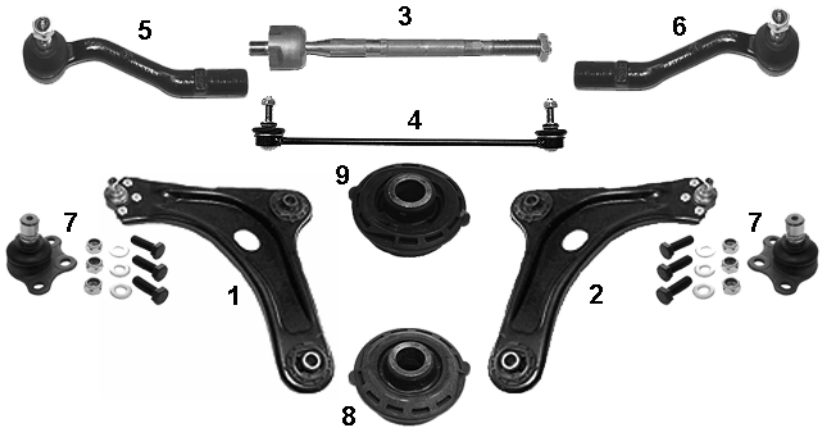

NR	MAPCO	REF									NEW	INFO
1	**19385**	3520L9	✓		✓				✓	✓		
2	**19386**	3521J1	✓			✓			✓	✓		
3	**19479**	3812E1	✓		✓	✓			✓	✓		
4	**19348HPS**	508745	✓		✓	✓			✓	✓		
5	**19489**	381755	✓		✓				✓	✓		
6	**19490**	381756	✓			✓			✓	✓		
7	**19491**	364062	✓		✓	✓			✓	✓		
8	**33334**	3523AA	✓		✓	✓			✓	✓		Ø 55,2mm
9	**33335**	352398	✓		✓	✓			✓	✓		Ø 55,5mm

CITROËN C3 02/02→

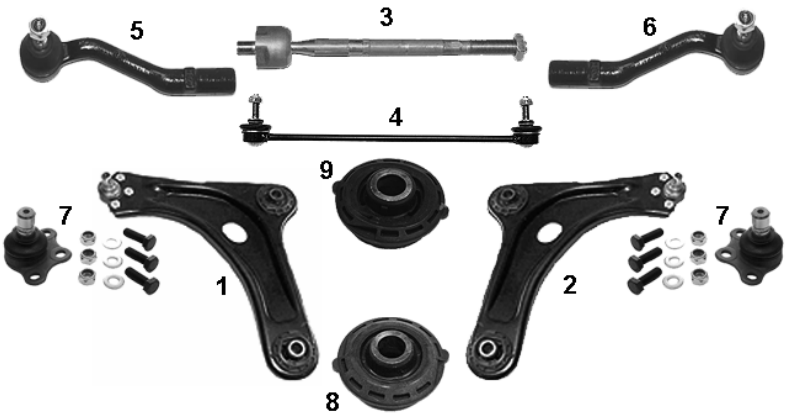

NR	MAPCO	REF								NEW	INFO
1	**19385**	3520L4	✓		✓				✓	✓		
2	**19386**	3521H6	✓			✓			✓	✓		
3	**19479**	3812E1	✓		✓	✓			✓	✓		
4	**19348HPS**	508745	✓		✓	✓			✓	✓		
5	**19489**	381755	✓		✓				✓	✓		
6	**19490**	381756	✓			✓			✓	✓		
7	**19491**	364056	✓		✓	✓			✓	✓		
8	**33334**	3523AA	✓		✓	✓			✓	✓		Ø 55,2mm
9	**33335**	352398	✓		✓	✓			✓	✓		Ø 55,5mm

CITROEN C3 Picasso 10/05→

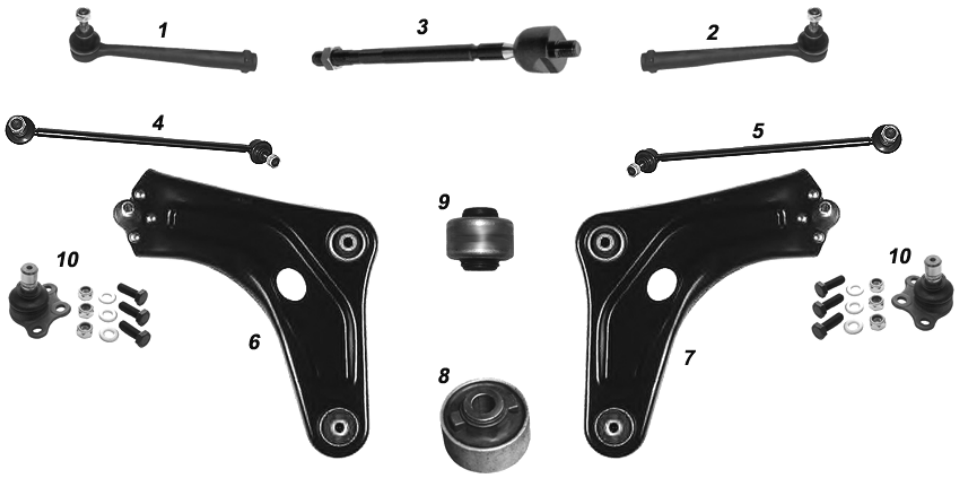

NR	MAPCO	REF								NEW	INFO
1	**49312**	381767	✓		✓				✓	✓	✓	
2	**49313**	381768	✓			✓			✓	✓	✓	
3	**49314**	3812.E8	✓		✓	✓			✓	✓	✓	
4	**49304HPS**	508754	✓		✓				✓	✓	✓	330,0 mm
5	**49305HPS**	508755	✓			✓			✓	✓	✓	330,0 mm
6	**49310**	3520R7	✓		✓				✓	✓	✓	
7	**49311**	3521N8	✓			✓			✓	✓	✓	
8	**33435**	3523CC	✓		✓	✓			✓	✓	✓	
9	**33436**	3523CE	✓		✓	✓			✓	✓	✓	
10	**19491**	364062	✓		✓	✓			✓	✓		

CITROËN C4 11/04→

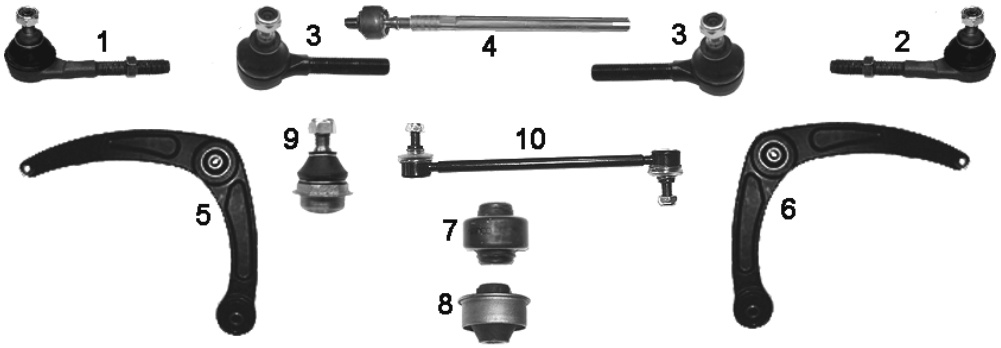

NR	MAPCO	REF								NEW	INFO
1	**19417**	381741	✓		✓				✓	✓		Chassis →10310
2	**19418**	381742	✓			✓			✓	✓		Chassis →10310
3	**19301**	381750	✓		✓	✓			✓	✓		M14x1,5RHT Chassis 10311→
4	**19379**	3812E0	✓		✓	✓			✓	✓		Chassis →10310
5	**19383**	3520P3	✓		✓				✓	✓		18,0 mm
6	**19384**	3521K3	✓			✓			✓	✓		18,0 mm
7	**33434**	352391	✓		✓	✓			✓	✓	✓	
8	**33336**	352392	✓		✓	✓			✓	✓		
9	**19372**	364068	✓		✓	✓			✓	✓		
10	**19375HPS**	508750	✓		✓	✓			✓	✓		

CITROËN C4 Picasso (UD_) 02/07→



NR	MAPCO	REF								NEW	INFO
1	**49315**	3812F2	✓		✓	✓			✓	✓	✓	257,0 mm
2	**19372**	364068	✓		✓	✓			✓	✓		
3	**33336**	352392	✓		✓	✓			✓	✓		
4	**33434**	352391	✓		✓	✓			✓	✓	✓	

CITROËN C5 03/01→

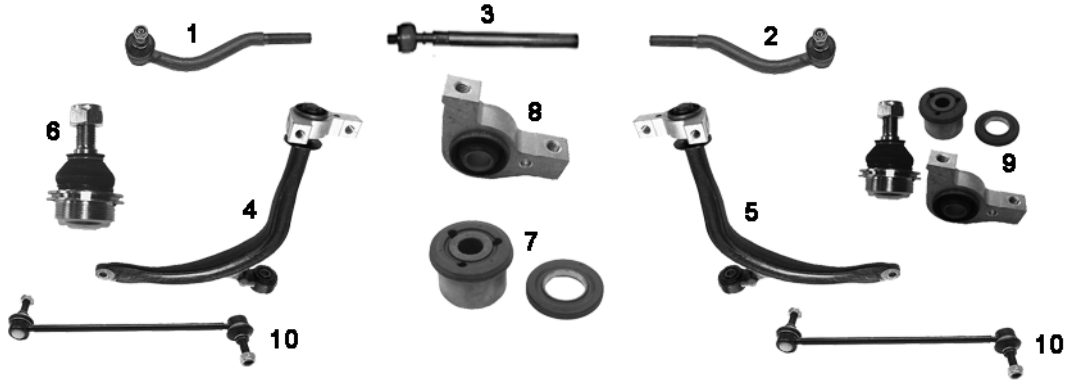

NR	MAPCO	REF								NEW	INFO
1	**19477**	381753	✓		✓				✓	✓		M16x1,5RHT
2	**19478**	381754	✓			✓			✓	✓		M16x1,5RHT
3	**49400**	3812C8	✓		✓	✓			✓	✓	✓	M16x1,5
4	**19390**	3520K3	✓		✓				✓	✓		
5	**19391**	3521G3	✓			✓			✓	✓		
6	**19425**	364034	✓		✓	✓			✓	✓		
7	**33427**	352384	✓		✓	✓		✓	✓	✓		
8	**33428**	352395	✓		✓	✓		✓	✓	✓		
9	**19245**		✓		✓	✓			✓	✓		KIT
10	**19362HPS**	508748	✓		✓	✓			✓	✓		

CITROËN C5 (RD_), (TD_) 02/08→

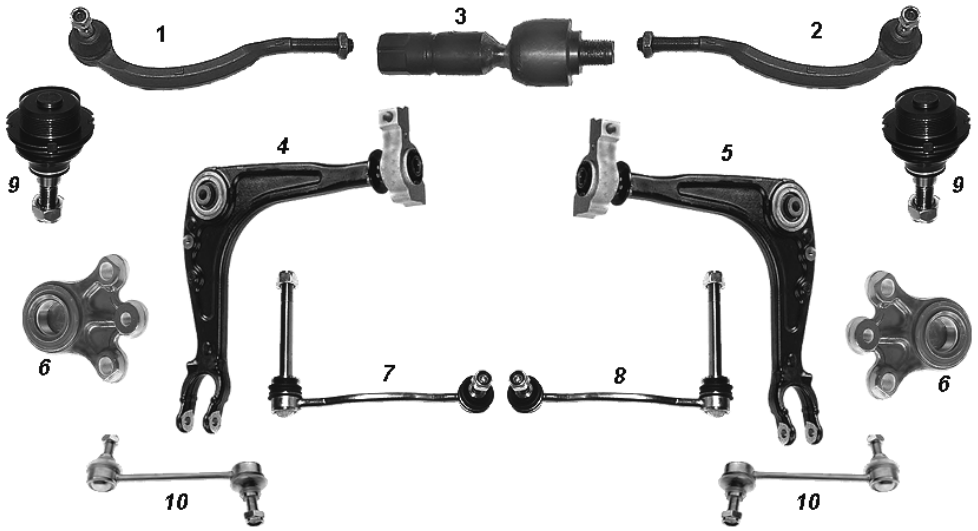

NR	MAPCO	REF								NEW	INFO
1	**19392**	381758	✓		✓				✓	✓		M14x1,5
2	**19393**	381757	✓			✓			✓	✓		M14x1,5
3	**19395**	3812E3	✓		✓	✓			✓	✓		M14x1,5
4	**49320**	3520N6	✓		✓			✓	✓	✓	✓	
5	**49321**	3521J6	✓			✓		✓	✓	✓	✓	
6	**49309**	364072	✓		✓	✓		✓	✓	✓	✓	
7	**19396**	508752	✓		✓				✓	✓		
8	**19397**	508753	✓			✓			✓	✓		
9	**19394**	364057	✓		✓	✓	✓		✓	✓		
10	**49303**	517852		✓	✓	✓			✓	✓	✓	140,0 mm

CITROËN C6 (TD_) 09/05→

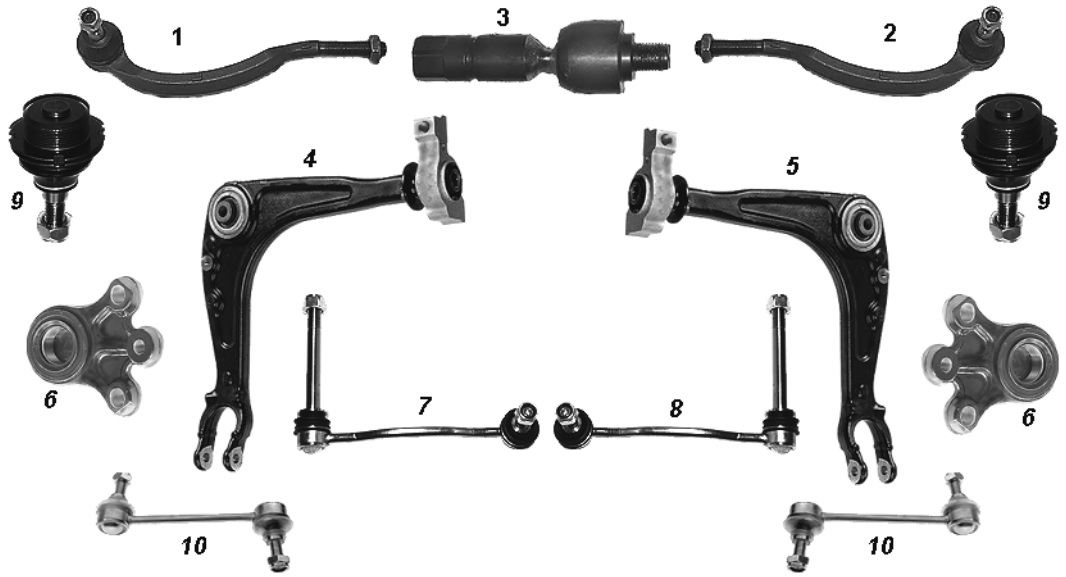

NR	MAPCO	REF									NEW	INFO
1	**19392**	381758	✓		✓				✓	✓		M14x1,5
2	**19393**	381757	✓			✓			✓	✓		M14x1,5
3	**19395**	3812E3	✓		✓	✓			✓	✓		M14x1,5
4	**49320**	3520N6	✓		✓			✓	✓	✓	✓	
5	**49321**	3521J6	✓			✓		✓	✓	✓	✓	
6	**49309**	364072	✓		✓	✓		✓	✓	✓	✓	
7	**19396**	508752	✓		✓				✓	✓		
8	**19397**	508753	✓			✓			✓	✓		
9	**19394**	364057	✓		✓	✓	✓		✓	✓		
10	**49303**	517852		✓	✓	✓			✓	✓	✓	140,0 mm

CITROËN C8 07/02→

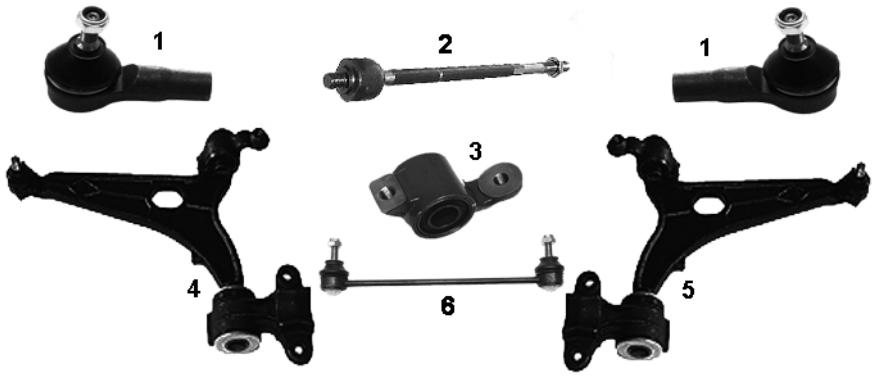

NR	MAPCO	REF									NEW	INFO
1	**19492**	405912	✓		✓	✓			✓	✓		M14x1,5
2	**19493**	3812E2	✓		✓	✓			✓	✓	✓	M14x1,5
3	**33017**	1312317080	✓		✓	✓			✓	✓		
4	**49082**	3520P6	✓		✓				✓	✓		
5	**49083**	3521K6	✓			✓			✓	✓		
6	**19376HPS**	508751	✓		✓	✓			✓	✓		

CITROËN EVASION 06/94→07/02
CITROËN JUMPY (U6U) 06/94→



NR	MAPCO	REF			←	→	↑	↓			NEW	INFO
1	**19430**	9404059080	✓		✓	✓			✓	✓		M14x1,5RHT
2	**19431**	3520P8	✓		✓				✓	✓		Chassis 6944→
3	**19432**	3521L0	✓			✓			✓	✓		Chassis 6944→
4	**19023**	3812A4	✓		✓	✓			✓	✓		M14x1,5RHT
5	**19363**	508735	✓		✓	✓			✓	✓		
6	**33017**	1312317080	✓		✓	✓			✓	✓		

CITROËN JUMPER (230_) 02/94→04/02

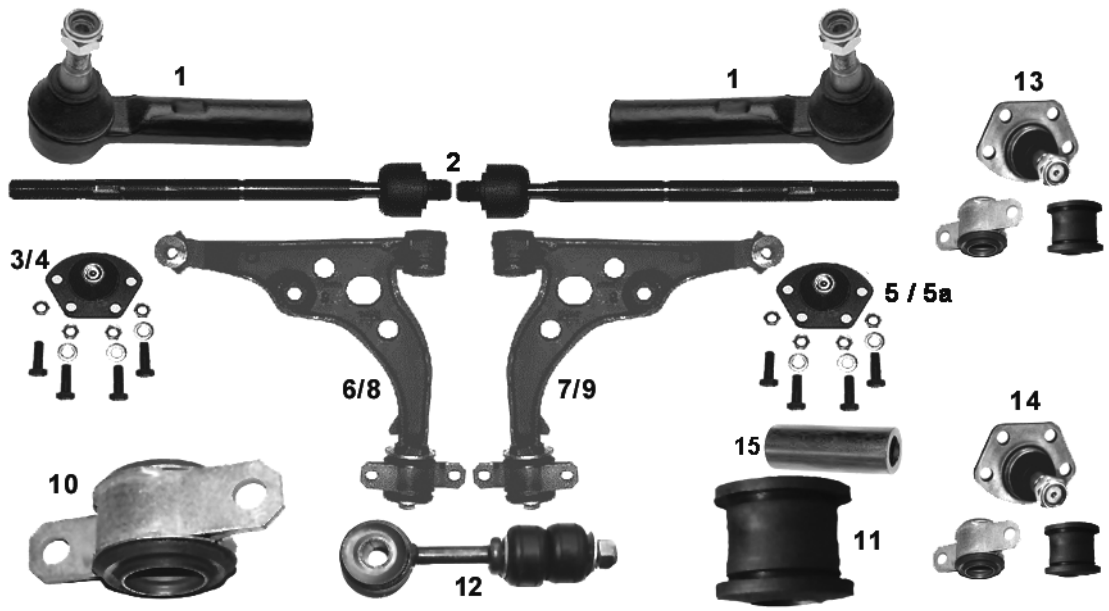

NR	MAPCO	REF			←	→	↑	↓			NEW	INFO
1	**19447**	4018A3	✓		✓	✓			✓	✓		M16x1,5RHT 120,0mm
2	**19448**	14716544080	✓		✓	✓			✓	✓		M16 x 1,5
3	**19449**	364032	✓		✓	✓			✓	✓		✓ (1.0t-1.4t) ø 17,0mm
4	**19450**	364033	✓		✓	✓			✓	✓		✓ (1.8t) ø 20,0mm
5	**19498**	364055	✓		✓	✓		✓	✓	✓	✓	✓ (1.0t-1.4t) ø 20,0mm 02/01→
5a	**19499**	364054	✓		✓	✓			✓	✓	✓	✓ (1.8t) ø 24,0mm 02/01→
6	**19461**	352095	✓		✓				✓	✓		✓ (1.0t-1.4t)
7	**19462**	352165	✓			✓			✓	✓		✓ (1.0t-1.4t)
8	**19463**	352096	✓		✓				✓	✓		✓ (1.8t)
9	**19464**	352166	✓			✓			✓	✓		✓ (1.8t)
10	**33001**	352394	✓		✓	✓			✓	✓		
11	**33006**	352393	✓		✓	✓			✓	✓		
15	**33006/1**	352505	✓		✓	✓			✓	✓		Hülse
12	**19366**	508737	✓		✓	✓			✓	✓		
13	**19251**		✓		✓	✓			✓	✓		Kit ✓ (1.0t-1.4t)
14	**19250**		✓		✓	✓			✓	✓		Kit ✓ (1.8t)
15	**33006/1**	352505	✓		✓	✓			✓	✓		Hülse

CITROËN JUMPER (244_)

04/02→

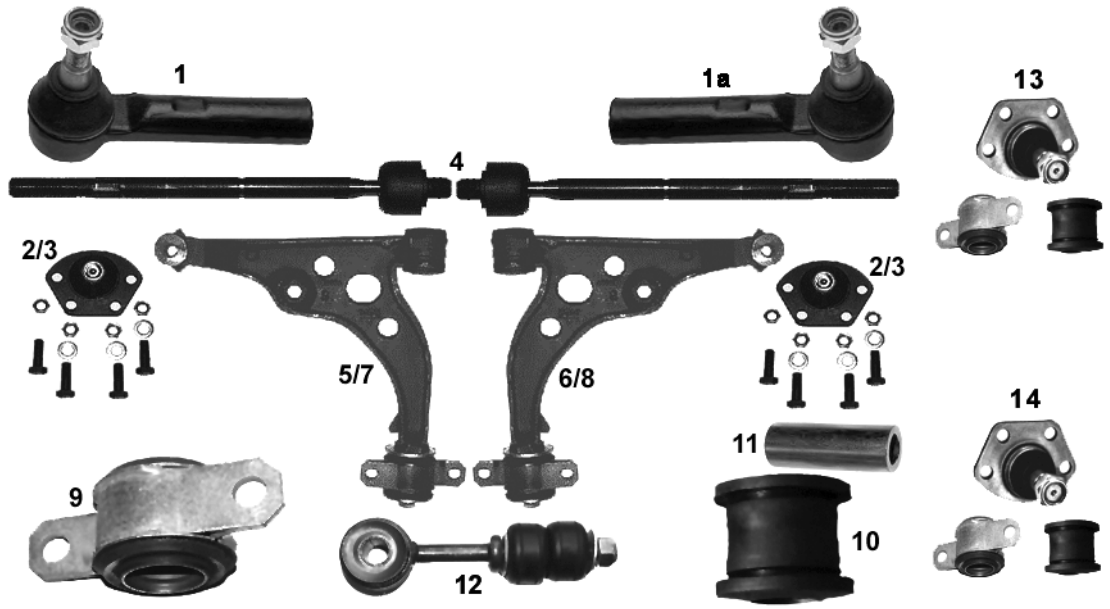

NR	MAPCO	REF			←	→	↑	↓			NEW	INFO
1	**19447**	4018A3	✓		✓	✓			✓	✓		→12/2002 M16x1,5RHT 120,0mm
1a	**19099**	4018E0	✓		✓	✓			✓	✓	✓	12/2002→ M16x1,5RHT
2	**19498**	364055	✓		✓	✓		✓	✓	✓	✓	✓ (1.0t-1.4t) ø 20,0mm
3	**19499**	364054	✓		✓	✓			✓	✓	✓	✓ (1.8t) ø 24,0mm
4	**19448**	400624	✓		✓	✓			✓			M16 x 1,5
5	**49084**	3520N3	✓		✓				✓	✓		✓ (1.0t-1.4t)
6	**49085**	3521J3	✓			✓			✓	✓		✓ (1.0t-1.4t)
7	**49086**	3520L0	✓		✓				✓	✓		✓ (1.8t)
8	**49087**	3521H3	✓			✓			✓	✓		✓ (1.8t)
9	**33001**	352394	✓		✓	✓			✓	✓		
10	**33006**	352393	✓		✓	✓			✓	✓		
11	**33006/1**	352505	✓		✓	✓			✓	✓		Hülse
12	**19366**	508737	✓		✓	✓			✓	✓		
13	**19251**		✓		✓	✓			✓	✓		Kit ✓ (1.0t-1.4t)
14	**19250**		✓		✓	✓			✓	✓		Kit ✓ (1.8t)

CITROËN JUMPER 04/06→

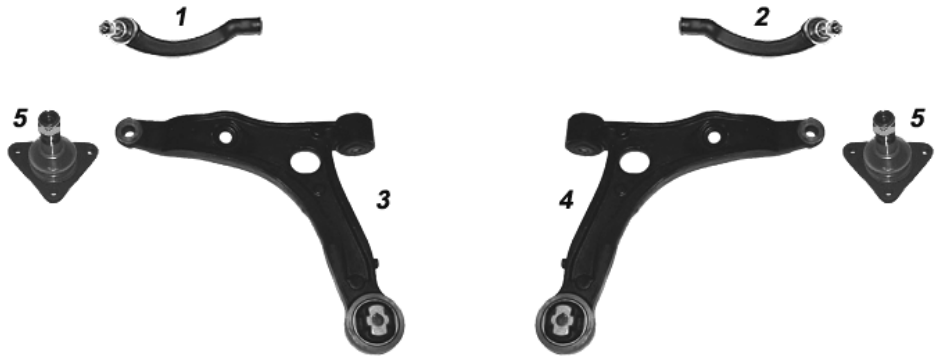

NR	MAPCO	REF									NEW	INFO
1	**19496**	3817 69	✓		✓				✓	✓	✓	
2	**19497**	3817 70	✓			✓			✓	✓	✓	
3	**19494**	3520 S0	✓		✓				✓	✓	✓	✓ (1.0t-1.7t)
4	**19495**	3521 P1	✓			✓			✓	✓	✓	✓ (1.0t-1.7t)
5	**49099**	3640 67	✓		✓	✓			✓	✓	✓	ø 24mm

CITROËN NEMO 02/08→

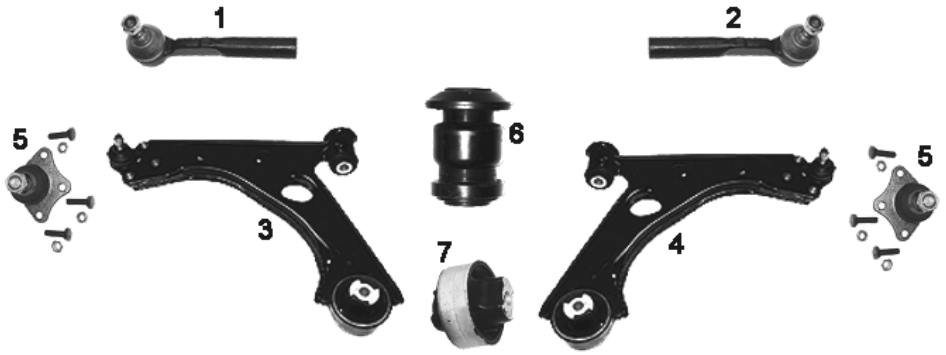

NR	MAPCO	REF									NEW	INFO
1	**59012**	3817 86	✓		✓				✓	✓	✓	
2	**59013**	3817 87	✓			✓			✓	✓	✓	
3	**19097**	3520 W3	✓		✓				✓	✓		
4	**19098**	3521 S6	✓			✓			✓	✓		
5	**49092**	**3520 W3 part of**	✓		✓	✓			✓	✓	✓	
6	**33044**		✓		✓	✓			✓	✓		
7	**33045**		✓		✓	✓			✓	✓		

CITROËN SAXO 05/96→

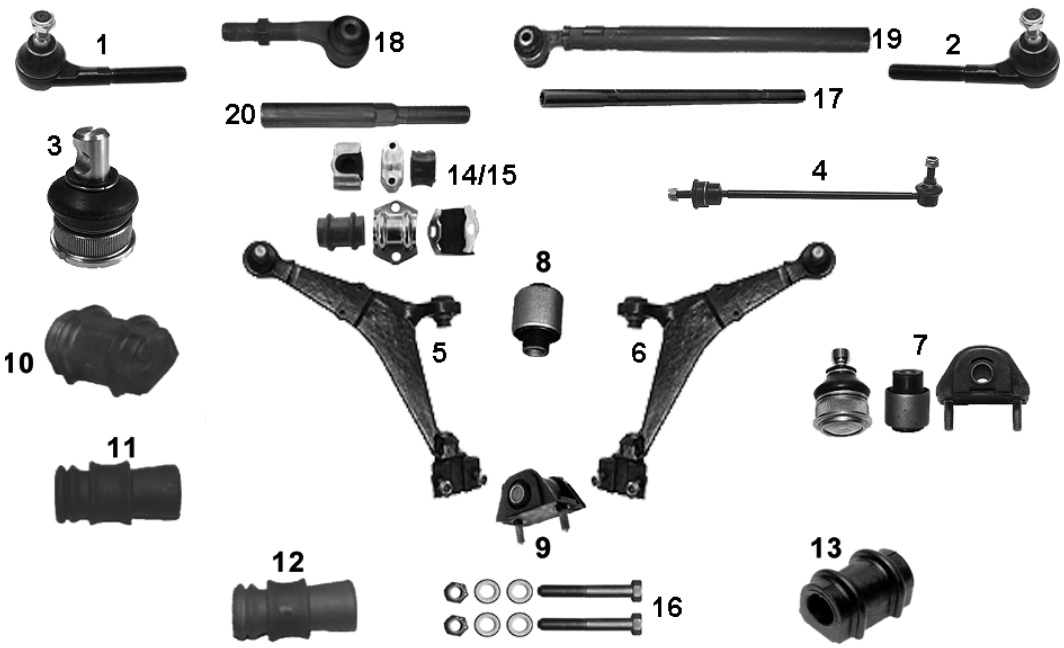

NR	MAPCO	REF			←	→	↑	↓		NEW	INFO
1	**19417**	381741	✓		✓				✓	✓		M14x1,5RHT
2	**19418**	381742	✓			✓			✓	✓		M14x1,5RHT
3	**19428**	96093233	✓		✓	✓			✓	✓		Ø 16 mm
4	**19338HPS**	508740	✓		✓	✓			✓	✓		
5	**19321**	95658978	✓		✓				✓	✓		
6	**19322**	95658979	✓			✓			✓	✓		
7	**19248**		✓		✓	✓			✓	✓		Kit
8	**33414**	95603308	✓		✓	✓			✓	✓		
9	**33415**	96106474	✓		✓	✓			✓	✓		
10	**33323**	509457	✓		✓	✓			✓	✓		21mm
11	**33324**	509459	✓		✓	✓			✓	✓		19mm
12	**33325**	509460	✓		✓	✓			✓	✓		20mm
13	**33420**	96054481	✓		✓	✓			✓	✓		19mm
14	**36402**		✓		✓	✓			✓	✓		
15	**36404**		✓		✓	✓			✓	✓		
16	**95321**		✓		✓	✓			✓	✓		MS
17	**19480**	3812A0	✓		✓	✓			✓	✓		M14x1,5
18	**19481**	381732	✓		✓					✓		M14x1,5LHT
19	**19482**	381735	✓			✓				✓		M14x1,5LHT
20	**19483**	381734	✓		✓	✓				✓		12,0mm, M14x1,5RHT, 132,0mm

CITROËN VISA 1.7D 03/84→ 06/89



NR	MAPCO	REF			←	→	↑	↓		NEW	INFO
1	**36403**		✓		✓	✓			✓	✓		

CITROËN XANTIA X1, X2 — 03/93→ 04/03

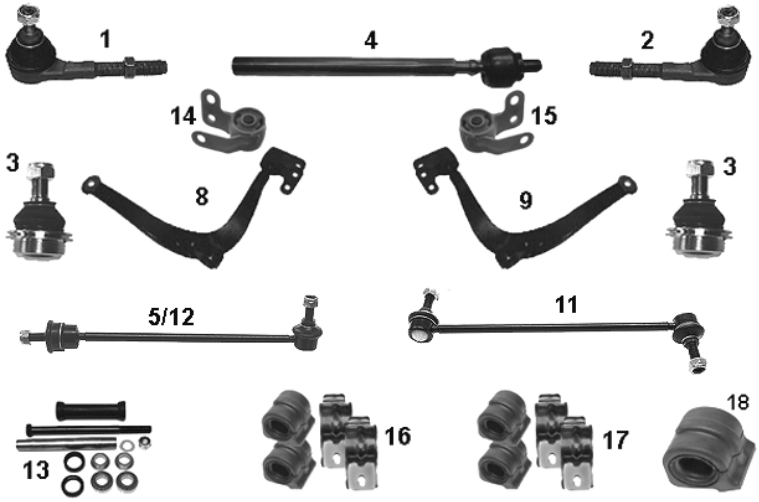

NR	MAPCO	REF			←	→	↑	↓			NEW	INFO
1	**19417**	381741	✓		✓				✓	✓		M14x1,5RHT
2	**19418**	381742	✓			✓			✓	✓		M14x1,5RHT
3	**19425**	364034	✓		✓	✓			✓	✓		
4	**19410**	96136394	✓		✓	✓			✓	✓		M14x1,50RHT 314,0 mm
5	**19429HPS**	96145457	✓		✓	✓			✓	✓		Chassis →6614
6	**19444**		✓		✓				✓	✓		**1+4**
7	**19445**		✓			✓			✓	✓		**2+4**
8	**19453**	3520C1	✓		✓				✓	✓		
9	**19454**	352181	✓			✓			✓	✓		
11	**19362HPS**	508748	✓		✓	✓			✓	✓		Chassis 8851→
12	**19338HPS**	508740	✓		✓	✓			✓	✓		Chassis 6615→8850
13	**34413**	95619159		✓	✓	✓			✓	✓		
14	**33425**	352381	✓		✓			✓	✓	✓		
15	**33426**	352382	✓			✓		✓	✓	✓		
16	**36406**		✓		✓	✓			✓	✓		
17	**36407**		✓		✓	✓			✓	✓		
18	**33403**	96089104	✓		✓	✓			✓	✓	✓	Ø 22mm

CITROËN XM — 03/89→10/00

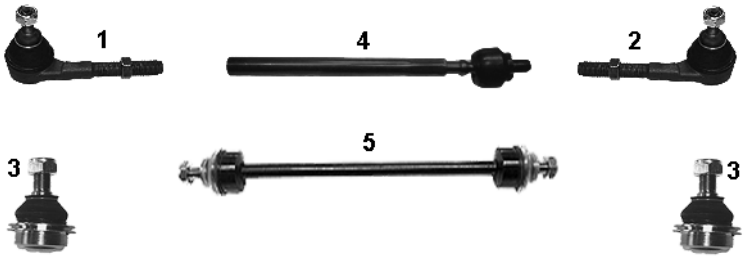

NR	MAPCO	REF			←	→	↑	↓			NEW	INFO
1	**19417**	381741	✓		✓				✓	✓		M14x1,5RHT
2	**19418**	381742	✓			✓			✓	✓		M14x1,5RHT
3	**19425**	364034	✓		✓	✓			✓	✓		
4	**19409**	96032460	✓		✓	✓			✓	✓		M14x1,5 RHT
5	**19451HPS**	508741	✓		✓	✓			✓	✓		

CITROËN XSARA 04/97→ 08/05

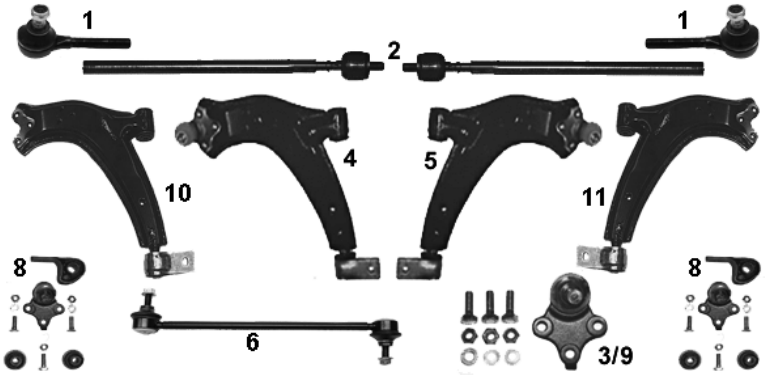

NR	MAPCO	REF								NEW	INFO
1	**19301**	381750	✓		✓	✓			✓	✓		M14x1,5RHT
2	**19411**	3812C0	✓		✓	✓			✓	✓		
3	**19427**	364038	✓		✓	✓			✓			16mm
4	**19459**	3520G5	✓		✓				✓			16mm
5	**19460**	3521C5	✓			✓			✓			16mm
6	**19337HPS**	508739	✓		✓	✓			✓	✓		
7	**19443**		✓		✓	✓			✓	✓		**1 + 2**
8	**19247**		✓		✓	✓			✓	✓		Kit
9	**19473**	364051	✓		✓	✓			✓			18 mm
10	**19331/1**	3520E0	✓		✓				✓	✓		
11	**19332/1**	352190	✓			✓			✓	✓		

CITROËN XSARA PICASSO (N68) 12/99→

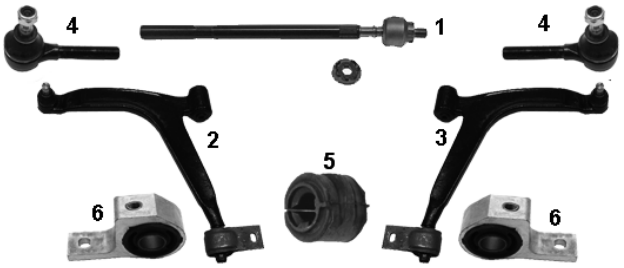

NR	MAPCO	REF								NEW	INFO
1	**19484**	3812C6	✓		✓	✓			✓	✓		320 mm M14x1,5RHT
2	**19485**	3520J3	✓		✓				✓	✓		✓1.6/1.8/2.0
3	**19486**	3521F3	✓			✓			✓	✓		✓1.6/1.8/2.0
4	**19301**	381750	✓		✓	✓			✓	✓		M14x1,5RHT
5	**33424**	509465	✓		✓	✓			✓	✓		Ø 21mm
6	**33431**	352383	✓		✓	✓			✓	✓		

CITROËN ZX STOP 2.0i 16V 01/91→ 06/97

NR	MAPCO	REF								NEW	INFO
1	**36406**		✓		✓	✓			✓	✓		
2	**36400**		✓		✓	✓			✓	✓		
3	**36401**		✓		✓	✓			✓	✓		

CITROËN ZX 01/91→ 06/97

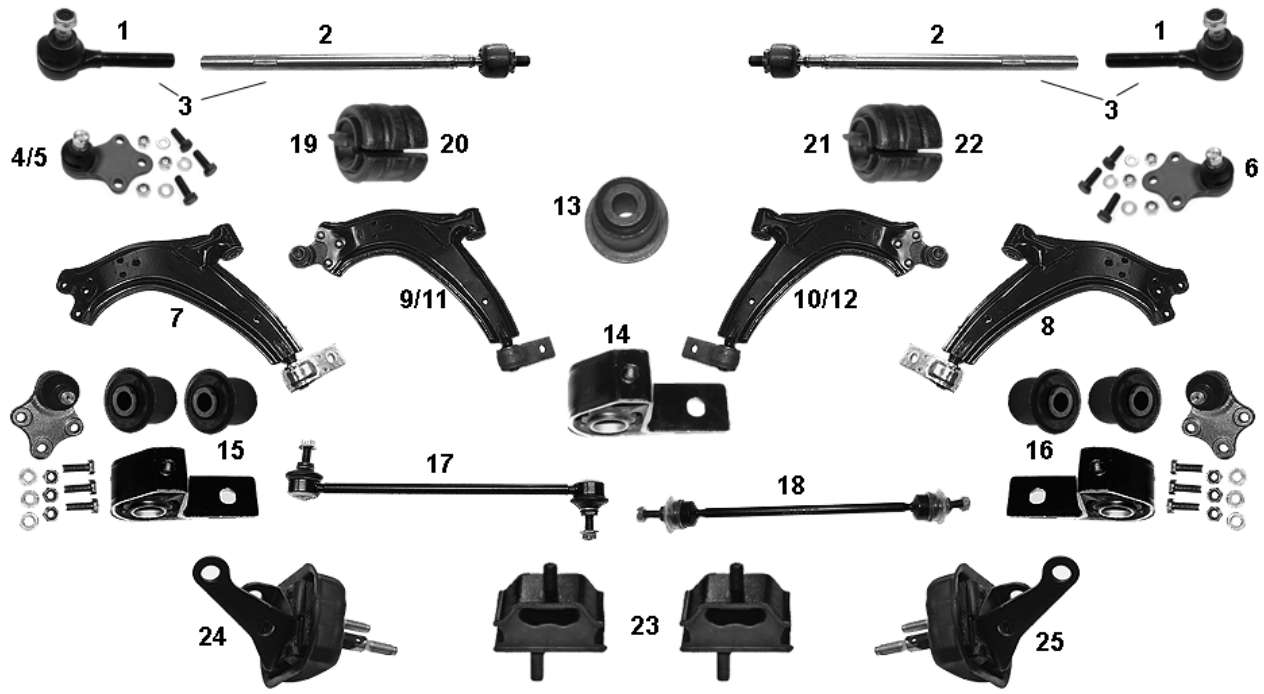

NR	MAPCO	REF									NEW	INFO
1	**19301**	381750	✓		✓	✓			✓	✓		M14x1,5RHT
2	**19411**	3812C0	✓		✓	✓			✓	✓		M14x1,5RHT
3	**19443**		✓		✓	✓			✓	✓		**1 + 2**
4	**19426**	364039	✓		✓	✓				✓		
5	**19427**	364038	✓		✓	✓			✓			Chassis →O 07972 16mm
6	**19473**	364051	✓		✓	✓			✓	✓		Chassis O 07973→ 18 mm
7	**19331/1**	3520E0	✓		✓				✓	✓		
8	**19332/1**	352190	✓			✓			✓	✓		
9	**19437**	3520A1	✓		✓					✓		Chassis →O 07972 16mm
10	**19438**	3521A6	✓			✓				✓		Chassis →O 07972 16mm
11	**19439**	3520F7	✓		✓				✓			Chassis →O 07972 16mm
12	**19440**	3521A7	✓			✓			✓			Chassis →O 07972 16mm
13	**33416**	352362	✓		✓	✓			✓	✓		
14	**33417**	352375	✓		✓	✓			✓	✓		
15	**19246**		✓		✓	✓				✓		Kit
16	**19247**		✓		✓	✓			✓			Kit
17	**19337HPS**	508734	✓		✓	✓			✓	✓		
18	**19435HPS**	96111480	✓		✓	✓			✓	✓		✓ 1.9i Chassies →O 065683
19	**33421**	96158745	✓		✓	✓			✓	✓		(Ø 18 mm)
20	**33422**	509466	✓		✓	✓			✓	✓		(Ø 19 mm)
21	**33424**	509465	✓		✓	✓			✓	✓		(Ø 21 mm)
22	**33423**	96051398	✓		✓	✓			✓	✓		(Ø 24 mm)
23	**33321**	513171		✓	✓	✓			✓	✓		
24	**33329**	513169		✓	✓				✓	✓		
25	**33330**	513170		✓		✓			✓	✓		

DACIA

DACIA LOGAN 09/04→

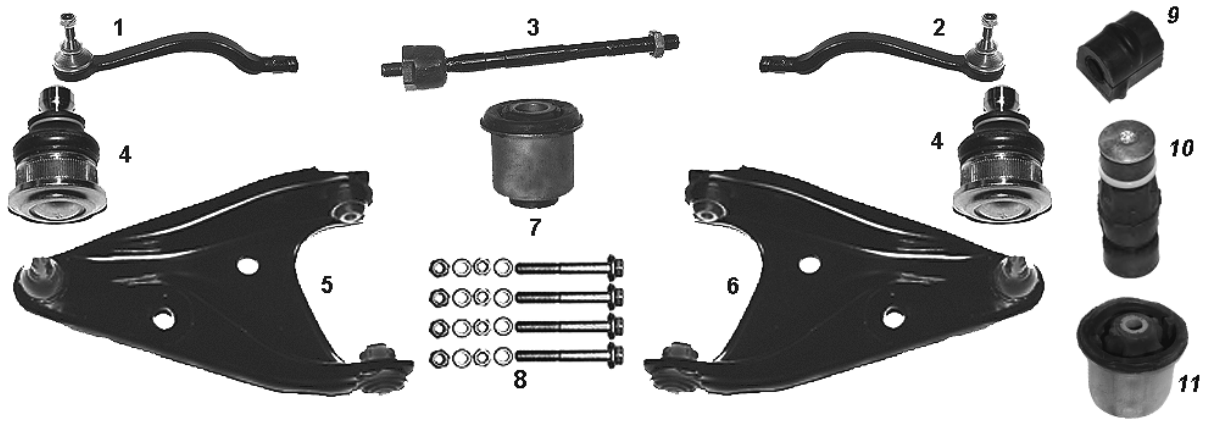

NR	MAPCO	REF									NEW	INFO
1	**49192**	6001547610	✓		✓			✓	✓	✓		
2	**49193**	6001547611	✓			✓		✓	✓	✓		
3	**49194**	6001547606	✓		✓	✓			✓	✓		
4	**49151**	6001547519	✓		✓	✓			✓	✓		Ø = 18mm
5	**49190**	8200216376	✓		✓			✓	✓	✓		
6	**49191**	8200216377	✓			✓		✓	✓	✓		
7	**33124**	6040002245	✓		✓	✓		✓	✓	✓		
8	**95137**		✓		✓	✓			✓	✓		MS
9	**33127**	6001547140	✓		✓	✓			✓	✓	✓	
10	**49160**	6001547138	✓		✓	✓			✓	✓	✓	
11	**33173**	6001549988		✓	✓	✓			✓	✓	✓	

DACIA LOGAN MCV 02/07→

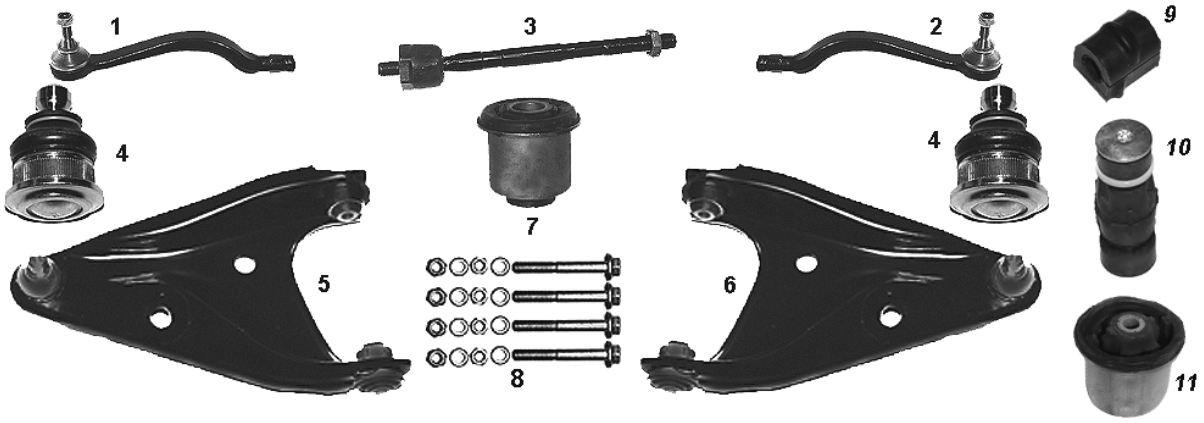

NR	MAPCO	REF									NEW	INFO
1	**49192**	6001547610	✓		✓			✓	✓	✓		
2	**49193**	6001547611	✓			✓		✓	✓	✓		
3	**49194**	6001547606	✓		✓	✓			✓	✓		
4	**49151**	6001547519	✓		✓	✓			✓	✓		Ø = 18mm
5	**49190**	8200216376	✓		✓			✓	✓	✓		
6	**49191**	8200216377	✓			✓		✓	✓	✓		
7	**33124**	6040002245	✓		✓	✓		✓	✓	✓		
8	**95137**		✓		✓	✓			✓	✓		MS
9	**33127**	6001547140	✓		✓	✓			✓	✓	✓	
10	**49160**	6001547138	✓		✓	✓			✓	✓	✓	
11	**33173**	6001549988		✓	✓	✓			✓	✓	✓	

DACIA SANDERO 06/08→

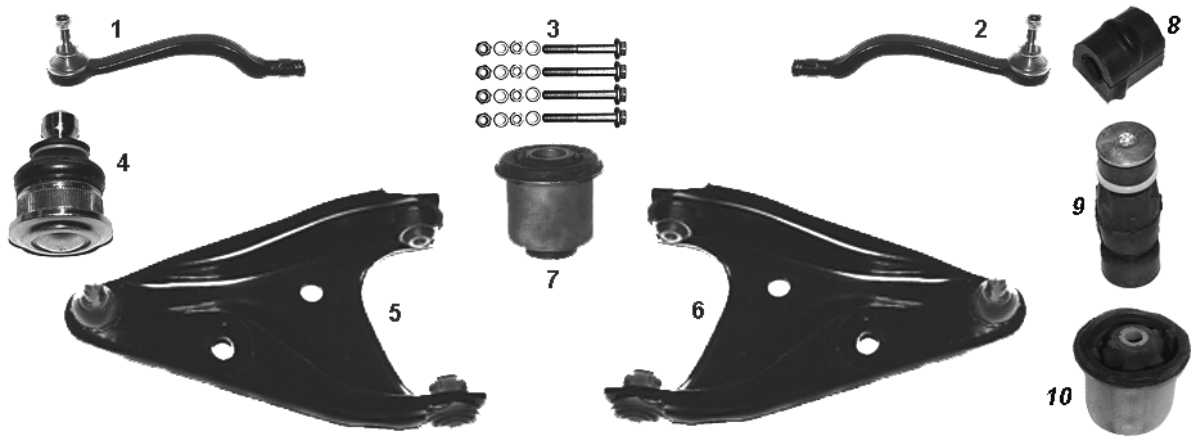

NR	MAPCO	REF									NEW	INFO
1	**49192**	6001547610	✓		✓			✓	✓	✓		
2	**49193**	6001547611	✓			✓		✓	✓	✓		
3	**95137**		✓		✓	✓			✓	✓		MS
4	**49151**	6001547519	✓		✓	✓			✓	✓		Ø = 18mm
5	**49190**	8200216376	✓		✓			✓	✓	✓		
6	**49191**	8200216377	✓			✓		✓	✓	✓		
7	**33124**	6040002245	✓		✓	✓		✓	✓	✓		
8	**33127**	6001547140	✓		✓	✓			✓	✓	✓	
9	**49160**	6001547138	✓		✓	✓			✓	✓	✓	
10	**33173**	6001549988		✓	✓	✓			✓	✓	✓	

DAEWOO

DAEWOO ESPERO (KLEJ) 1991→1999

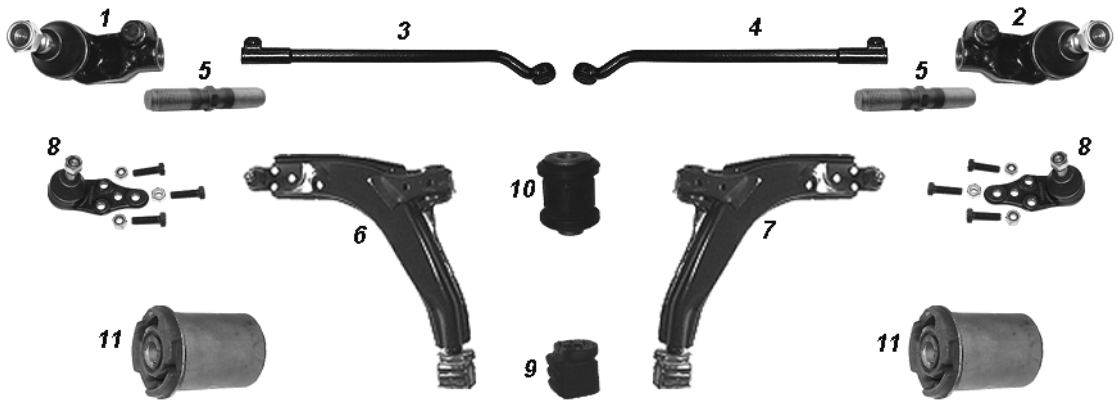

NR	MAPCO	REF								NEW	INFO
1	**19718**	26001807	✓		✓				✓	✓		M16x1,5RHT
2	**19719**	26001806	✓			✓			✓	✓		M16x1,5RHT
3	**59295**	07848281	✓		✓				✓	✓		
4	**59296**	07848282	✓			✓			✓	✓		
5	**59367**	7846696	✓		✓	✓			✓	✓		98,5mm M16x1,5
6	**49756**	96218397	✓		✓				✓	✓		
7	**49757**	96218398	✓			✓			✓	✓		
8	**19714**	94788122	✓		✓	✓			✓	✓		
9	**33757**	352335	✓		✓	✓			✓	✓		
10	**33752**	96185973	✓		✓	✓			✓	✓		
11	**33785**	90189050		✓	✓	✓			✓	✓		Ø 48,0mm

DAEWOO KALOS (KLAS) 09/02→



NR	MAPCO	REF									NEW	INFO
1	**51298**	93740722	✓		✓				✓		✓	M12x1,25
2	**51299**	93740723	✓			✓			✓		✓	M12x1,25
3	**51296**	96535081	✓		✓			✓	✓	✓	✓	
4	**51297**	96535082	✓			✓		✓	✓	✓	✓	
5	**51300**	96535089	✓		✓	✓		✓	✓	✓	✓	M12x1,25
6	**33574**	96653381	✓		✓	✓		✓	✓	✓	✓	
7	**33575**	96535087	✓		✓	✓		✓	✓	✓	✓	
8	**19558HPS**	96391875	✓		✓	✓			✓	✓		264,0 mm

KORANDO (KJ) 01/99→

NR	MAPCO	REF									NEW	INFO
1	**19557**	4666005501	✓		✓	✓			✓	✓		M14 x 1,5 RHT 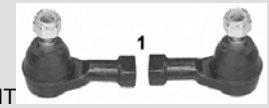

DAEWOO LACETTI (KLAN) 02/04→

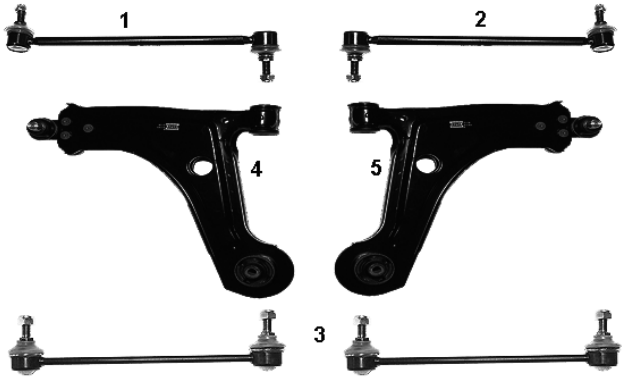

NR	MAPCO	REF									NEW	INFO
1	**51290HPS**	96403099	✓		✓				✓	✓		
2	**51291HPS**	96403100	✓			✓			✓	✓		
3	**51293HPS**	96561754		✓	✓	✓			✓	✓	✓	
4	**51294**	96415063	✓		✓			✓	✓	✓	✓	
5	**51295**	96415064	✓			✓		✓	✓	✓	✓	

DAEWOO LANOS (KLAT) 09/97→ 2005

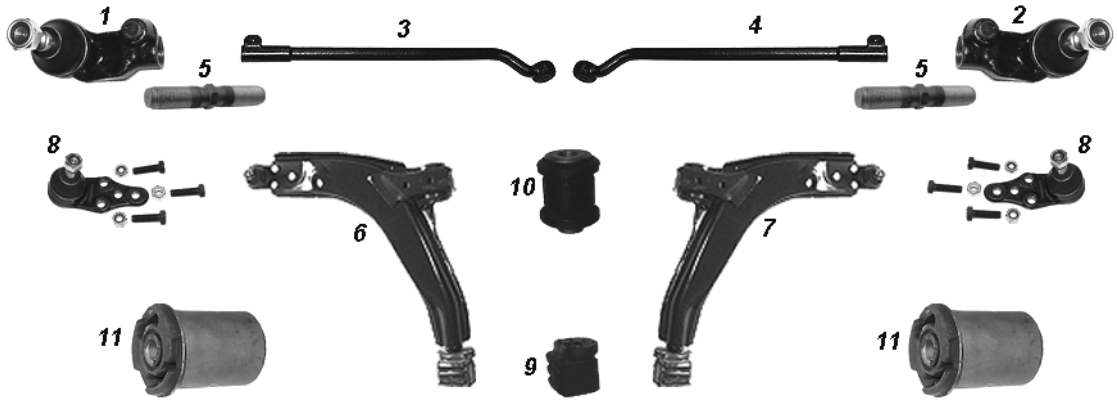

NR	MAPCO	REF									NEW	INFO
1	**19718**	26001807	✓		✓				✓	✓		M16x1,5RHT
2	**19719**	26001806	✓			✓			✓	✓		M16x1,5RHT
3	**59295**	07848281	✓		✓				✓	✓		
4	**59296**	07848282	✓			✓			✓	✓		
5	**59367**	7846696	✓		✓	✓			✓	✓		98,5mm M16x1,5
6	**49756**	96218397	✓		✓				✓	✓		
7	**49757**	96218398	✓			✓			✓	✓		
8	**19714**	94788122	✓		✓	✓			✓	✓		
9	**33757**	352335	✓		✓	✓			✓	✓		
10	**33752**	96185973	✓		✓	✓			✓	✓		
11	**33785**	90189050		✓	✓	✓			✓	✓		Ø 48,0mm

DAEWOO LEGANZA (KLAV) 06/97→ 04/04

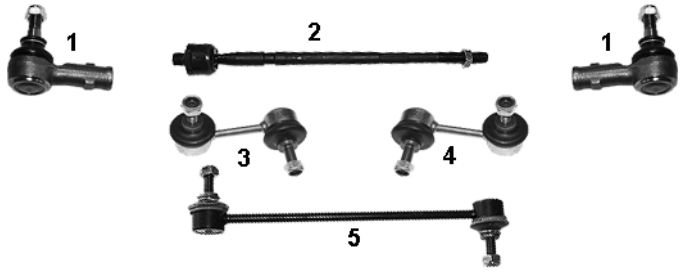

NR	MAPCO	REF								NEW	INFO
1	**59211**	96205809	✓		✓	✓			✓	✓	
2	**59217**	520838	✓		✓	✓			✓	✓	**288,0 mm**
3	**49295**	96225858	✓		✓				✓	✓	80,0mm
4	**49296**	96225859	✓			✓			✓	✓	80,0mm
5	**49297**	96207628		✓	✓	✓			✓	✓	

DAEWOO MUSSO (FJ) 01/99→ 2005

NR	MAPCO	REF								NEW	INFO
1	**19557**	4666005501	✓		✓	✓			✓	✓	M14 x 1,5 RHT 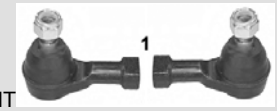

DAEWOO NEXIA (KLETN) 02/95→08/97

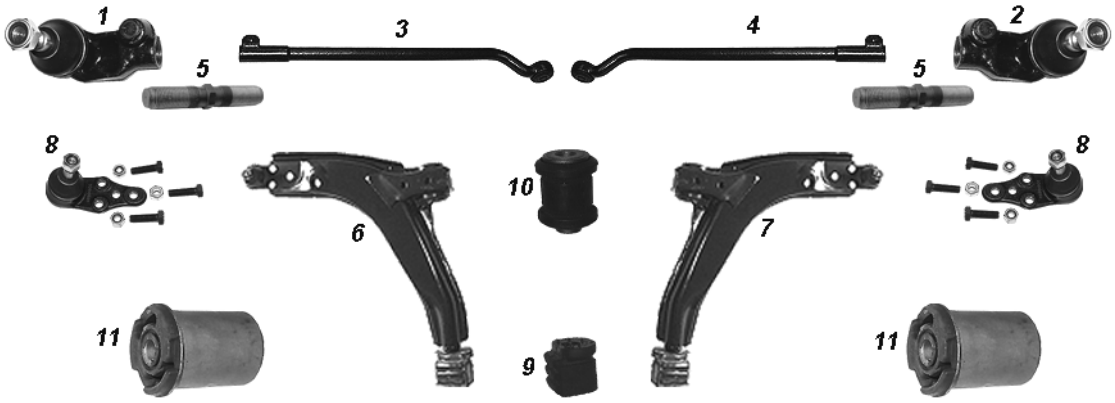

NR	MAPCO	REF								NEW	INFO
1	**19718**	26001807	✓		✓				✓	✓	M16x1,5RHT
2	**19719**	26001806	✓			✓			✓	✓	M16x1,5RHT
3	**59295**	07848281	✓		✓				✓	✓	
4	**59296**	07848282	✓			✓			✓	✓	
5	**59367**	7846696	✓		✓	✓			✓	✓	98,5mm M16x1,5
6	**49756**	96218397	✓		✓				✓	✓	
7	**49757**	96218398	✓			✓			✓	✓	
8	**19714**	94788122	✓		✓	✓			✓	✓	
9	**33757**	352335	✓		✓	✓			✓	✓	
10	**33752**	96185973	✓		✓	✓			✓	✓	
11	**33785**	90189050		✓	✓	✓			✓	✓	Ø 48,0mm

DAEWOO NUBIRA (KLAJ) 04/97→ 2005

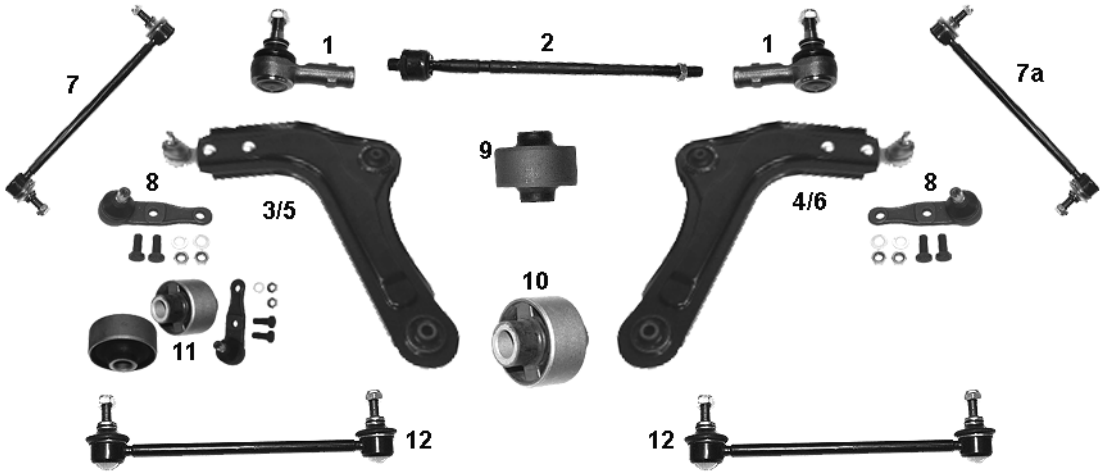

NR	MAPCO	REF								NEW	INFO
1	**59211**	96205809	✓		✓	✓			✓	✓		
2	**59217**	520838	✓		✓	✓			✓	✓		
3	**49597**	96268439	✓		✓				✓	✓		→12/99
4	**49598**	96268440	✓			✓			✓	✓		→12/99
5	**49290**	96268454	✓		✓				✓	✓		01/00→
6	**49291**	96268455	✓			✓			✓	✓		01/00→
7	**19559HPS**	96300627	✓		✓	✓			✓	✓		→12/98
7a	**19558HPS**	96275798	✓		✓	✓			✓	✓		01/99→
8	**19519**	96300648	✓		✓	✓			✓	✓		
9	**33570**	(96298000)	✓		✓	✓			✓	✓		
10	**33571**	(96308002)	✓		✓	✓			✓	✓		
11	**19299**		✓		✓	✓			✓	✓		Kit
12	**49298HPS**	96300222		✓	✓	✓			✓	✓		

DAEWOO NUBIRA (KLAN) 07/03→

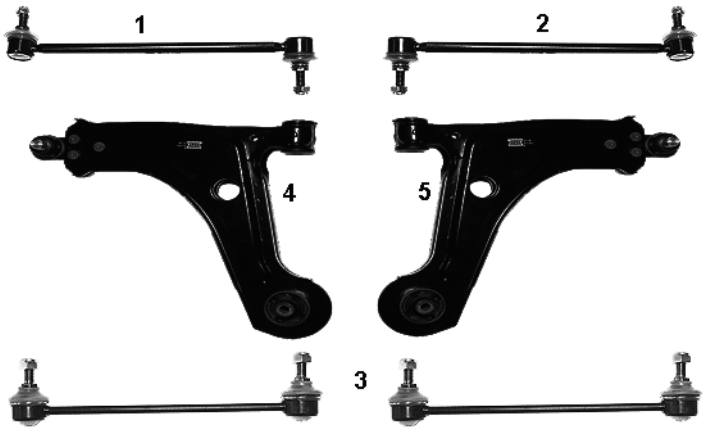

NR	MAPCO	REF								NEW	INFO
1	**51290HPS**	96403099	✓		✓				✓	✓		
2	**51291HPS**	96403100	✓			✓			✓	✓		
3	**51293HPS**	96561754		✓	✓	✓			✓	✓	✓	
4	**51294**	96415063	✓		✓			✓	✓	✓		
5	**51295**	96415064	✓			✓		✓	✓	✓		

DAEWOO TICO (KLY3) 1995→ 2005
DAEWOO MATIZ (KLYA) 1997→ 2005

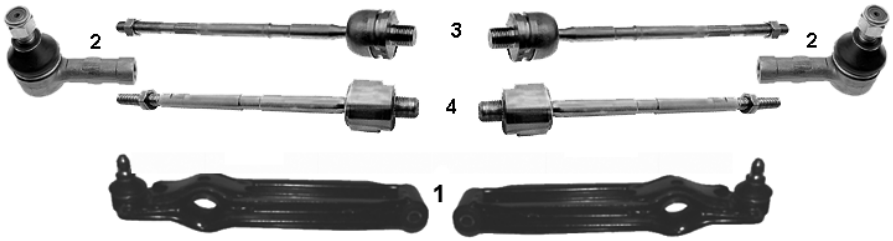

NR	MAPCO	REF								NEW	INFO
1	**19518**	4500A78B01	✓		✓	✓			✓	✓	
2	**19517**	48810A78B00	✓		✓	✓			✓	✓	M12x1,5RHT
3	**59717**	521257	✓		✓	✓			✓	✓	Rad / wheel 175
4	**59718**	KBJR45	✓		✓	✓			✓	✓	M12x1,5RHT 268 mm

DAEWOO TACUMA / REZZO (KLAU) 09/00→



NR	MAPCO	REF								NEW	INFO
1	**19558HPS**	96391875	✓		✓	✓			✓	✓	264,0 mm

DAIHATSU

DAIHATSU APPLAUSE 1989→07/97



NR	MAPCO	REF								NEW	INFO
1	**19597**	45047-87784	✓		✓				✓	✓	M12x1,25RHT
2	**19598**	45046-87784	✓			✓			✓	✓	M12x1,25RHT

DAIHATSU CHARADE II 01/83→12/86



NR	MAPCO	REF								NEW	INFO
1	**59212**	48068-87705	✓		✓	✓			✓	✓	

DAIHATSU CHARADE III 01/87→ 12/92

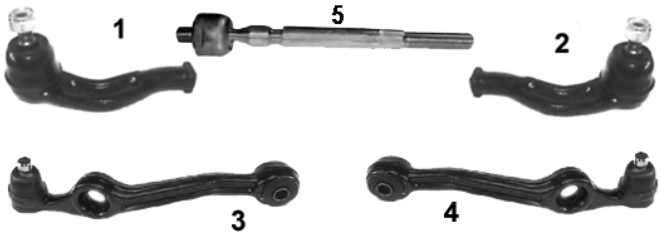

NR	MAPCO	REF			←	→	↑	↓			NEW	INFO
1	**19597**	45047-87784	✓		✓				✓	✓		M12x1,5RHT
2	**19598**	45046-87784	✓			✓			✓	✓		M12x1,5RHT
3	**59213**	48069-87706	✓		✓				✓	✓		
4	**59218**	48068-87706	✓			✓			✓	✓		
5	**59214**	45503-87708	✓		✓	✓			✓	✓		

DAIHATSU CUORE II + III 1985→12/94



NR	MAPCO	REF			←	→	↑	↓			NEW	INFO
1	**59216**	45047-87780	✓		✓				✓	✓		M12x1,5RHT
2	**59215**	45046-87780	✓			✓			✓	✓		M12x1,5RHT

DAIHATSU FEROZA (F300) 10/88→

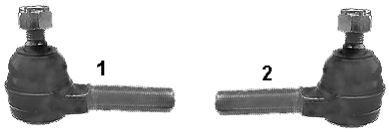

NR	MAPCO	REF			←	→	↑	↓			NEW	INFO
1	**59208**	45047-87680	✓		✓				✓	✓		M20x1,5LHT
2	**59207**	45046-87680	✓			✓			✓	✓		M20x1,5RHT

DAIHATSU HIJET I 06/86→12/89



NR	MAPCO	REF			←	→	↑	↓			NEW	INFO
1	**19531**	45047-87580	✓		✓				✓	✓		
2	**19532**	45046-87580	✓			✓			✓	✓		

DAIHATSU ROCKY (F7, F8) 09/84→ 04/93

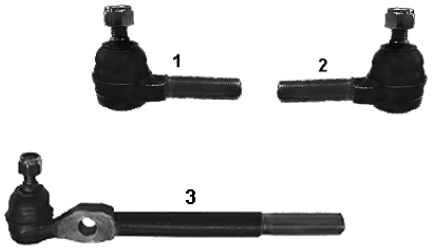

NR	MAPCO	REF								NEW	INFO
1	**59208**	45047-87680	✓		✓				✓	✓		M20x1,5LHT
2	**59207**	45046-87680	✓			✓			✓	✓		M20x1,5RHT
3	**59209**	45047-87682	✓		✓				✓	✓		M22x1,5LHT

DAIHATSU WILDCAT/ROCKY (F70), (F75) 02/85→04/87

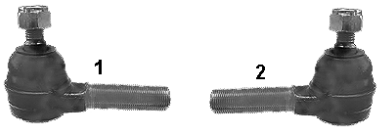

NR	MAPCO	REF								NEW	INFO
1	**59208**	45047-87680	✓		✓				✓	✓		M20x1,5LHT
2	**59207**	45046-87680	✓			✓			✓	✓		M20x1,5RHT

FIAT

FIAT 500 10/07→



NR	MAPCO	REF									NEW	INFO
1	**49057**	77362507	✓		✓				✓	✓		
2	**49058**	77362508	✓			✓			✓	✓		
3	**49096**	51857021	✓		✓			✓	✓	✓	✓	
4	**49097**	51857022	✓			✓		✓	✓	✓	✓	
5	**19028HPS**	50700941	✓		✓	✓			✓	✓		

FIAT BARCHETTA 03/95→

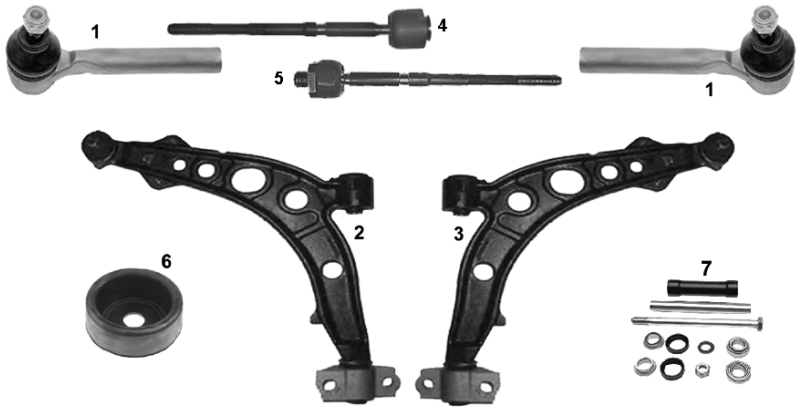

NR	MAPCO	REF								NEW	INFO
1	**19065**	7752285	✓		✓	✓			✓	✓		M12x1,5RHT
2	**19066**	7750977	✓		✓				✓	✓		
3	**19067**	7750978	✓			✓			✓	✓		
4	**19068**	7701491	✓		✓	✓				✓		M12x1,5RHT
5	**19079**	9945562	✓		✓	✓			✓			
6	**33005**	46476755		✓	✓	✓			✓	✓		
7	**34053**	17736515		✓	✓	✓			✓	✓		

FIAT BRAVA - BRAVO 10/95→10/01

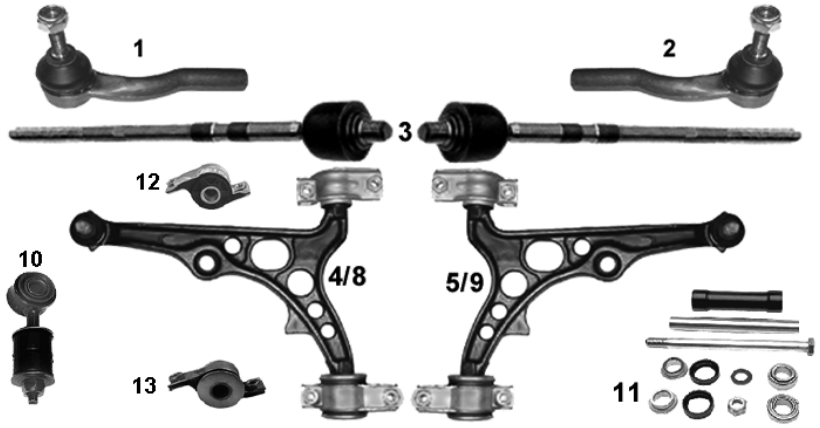

NR	MAPCO	REF								NEW	INFO
1	**19052**	7591216	✓		✓				✓	✓		M12x1,5RHT
2	**19053**	7591215	✓			✓			✓	✓		M12x1,5RHT
3	**19022**	9941625	✓		✓	✓			✓	✓		M12x1,5RHT
4	**19056**	46423822	✓		✓				✓	✓		Ø 17 mm STOP 2.0
5	**19057**	46423823	✓			✓			✓	✓		Ø 17 mm STOP 2.0
6	**19022/1**		✓		✓				✓	✓		**1 + 3**
7	**19022/2**		✓			✓			✓	✓		**2 + 3**
8	**19009**	46474556	✓		✓				✓	✓		✓ 2.0
9	**19010**	46474557	✓			✓			✓	✓		✓ 2.0
10	**33009**	60809242	✓		✓	✓			✓	✓		
11	**34054**			✓	✓	✓			✓	✓		
12	**33019**	7601065	✓		✓				✓	✓		
13	**33035**	7601068	✓			✓			✓	✓		

FIAT BRAVO 04/07→

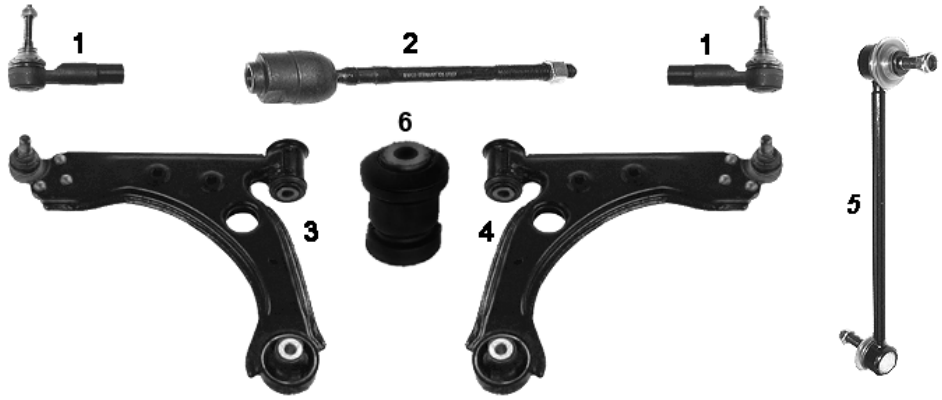

NR	MAPCO	REF									NEW	INFO
1	**49040**	9949218	✓		✓	✓			✓	✓		
2	**49043**	9949217	✓		✓	✓			✓	✓		
3	**49094**	50705464	✓		✓				✓	✓		
4	**49095**	50705465	✓			✓			✓	✓		
5	**19028HPS**	50700941	✓		✓	✓			✓	✓		
6	**33057**	50704252	✓		✓	✓			✓	✓	✓	

FIAT CINQUECENTO (170) 07/91→07/99
FIAT SEICENTO (187) 01/98→

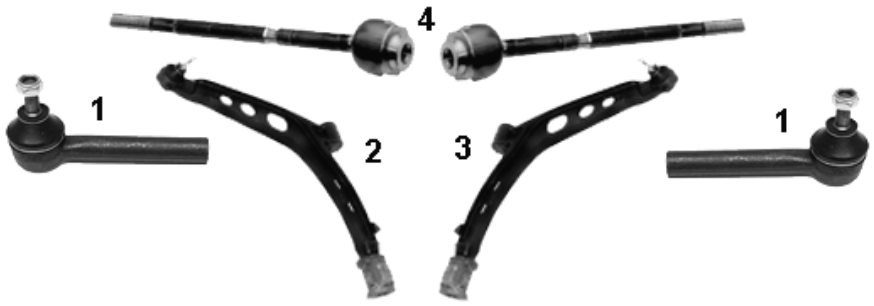

5 / 6

NR	MAPCO	REF									NEW	INFO
1	**19042**	5960036	✓		✓	✓			✓	✓		M12x1,5RHT
2	**19072**	7636995	✓		✓				✓	✓		
3	**19073**	7636996	✓			✓			✓	✓		
4	**19069**	7658273	✓		✓	✓			✓	✓		
5	**49076**	7663114		✓	✓				✓	✓	✓	
6	**49077**	7663115		✓		✓			✓	✓	✓	

FIAT CROMA (154) 10/85→12/96

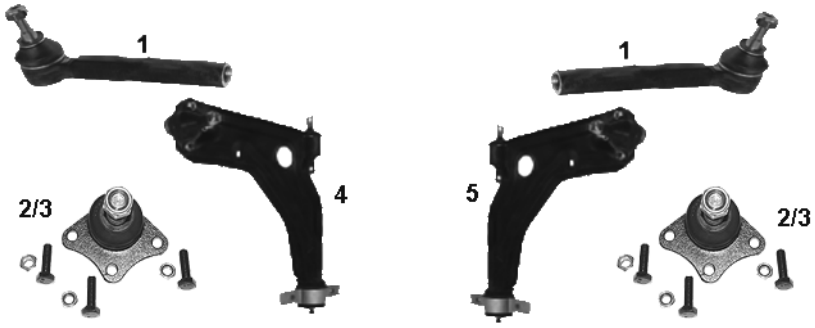

NR	MAPCO	REF			←	→	↑	↓			NEW	INFO
1	**19058**	82392503 99239556	✓		✓	✓			✓	✓		→03/86 M12x1,5RHT
1	**19059**	82387676	✓		✓	✓			✓	✓		04/86→ M14x1,5RHT
2	**19060**	82398170 82446499	✓		✓	✓			✓	✓		→12/91 Ø 13 mm
3	**19008**	60510360 82420623	✓		✓	✓			✓	✓		01/92→ Ø 15 mm
4	**19020**	60801529	✓		✓				✓	✓		01/92→ Ø 15 mm
5	**19021**	60801528	✓			✓			✓	✓		01/92→ Ø 15 mm

FIAT CROMA (194) 06/05→

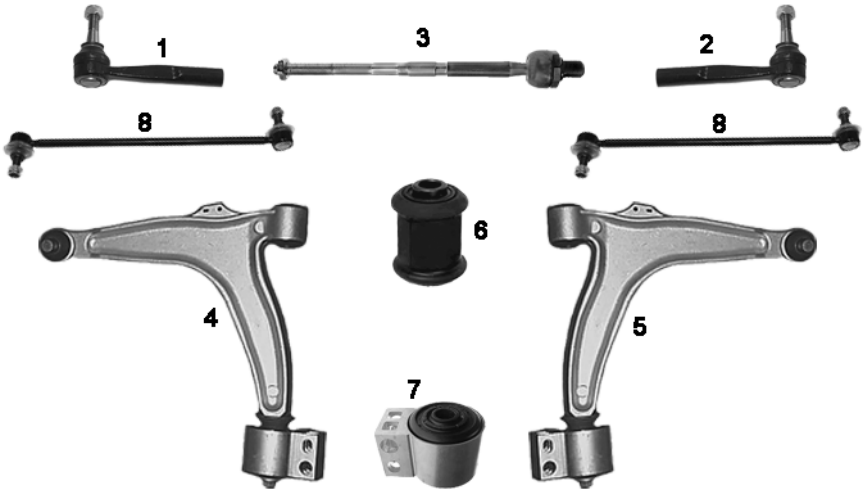

NR	MAPCO	REF			←	→	↑	↓			NEW	INFO
1	**49620**	77363713	✓		✓				✓	✓		M14x1,5
2	**49621**	77363712	✓			✓			✓	✓		M14x1,5
3	**49622**	1603415	✓		✓	✓			✓	✓		
4	**49623**	51748653	✓		✓				✓	✓		
5	**49624**	51748652	✓			✓			✓	✓		
6	**33788**	352323	✓		✓	✓			✓	✓		
7	**36703**	71740107	✓		✓	✓			✓	✓		
8	**49749HPS**	51741130	✓		✓	✓			✓	✓		

FIAT DOBLO (119) / DOBLO Cargo (223) 03/01→

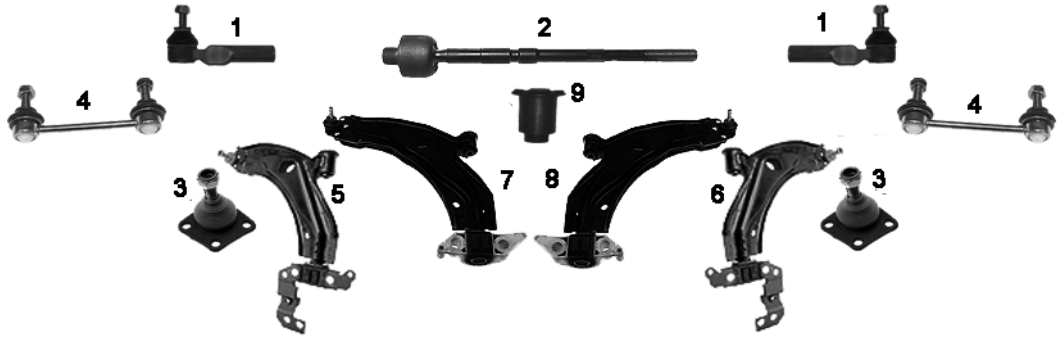

NR	MAPCO	REF									NEW	INFO
1	**19015**	9947714	✓		✓	✓			✓	✓		M14x1,5RHT
2	**49093**	98845024	✓		✓	✓			✓	✓	✓	
3	**49038**	46543045	✓		✓	✓			✓	✓		
4	**49039HPS**	51717000		✓	✓	✓			✓	✓		118,0mm
5	**49036**	51866701	✓		✓				✓	✓		Chassis 5023343 →
6	**49037**	51866700	✓			✓			✓	✓		Chassis 5023343 →
7	**49089**	51727865	✓		✓			✓	✓	✓		✓ Cargo
8	**49090**	51727863	✓			✓		✓	✓	✓		✓ Cargo
9	**33018**	46421522	✓		✓	✓			✓	✓		

FIAT DUCATO (290) 01/82→ 03/94
FIAT TALENTO (290) 03/89→ 03/94

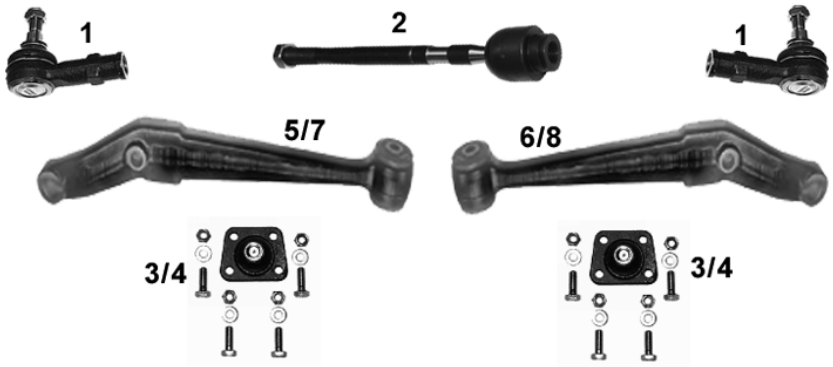

NR	MAPCO	REF									NEW	INFO
1	**19420**	9750079980	✓		✓	✓			✓	✓		M16x1,5RHT
2	**19405**	9750390080	✓		✓	✓				✓		M16x1,5RHT
3	**19421**	4388159	✓		✓	✓			✓	✓		→09/85 Ø 16 mm
4	**19422**	7567284	✓		✓	✓			✓	✓		10/85→ Ø 17 mm
5	**19441**	1317240080	✓		✓				✓	✓		10/85→93 ✓ 1.0-1.4t
6	**19442**	1317241080	✓			✓			✓	✓		10/85→93 ✓ 1.0-1.4t
7	**19468**	1317238080	✓		✓				✓	✓		10/85→93 ✓ 1.8 t
8	**19469**	1317239080	✓			✓			✓	✓		10/85→93 ✓ 1.8 t

FIAT DUCATO (230) 03/94→ 04/02

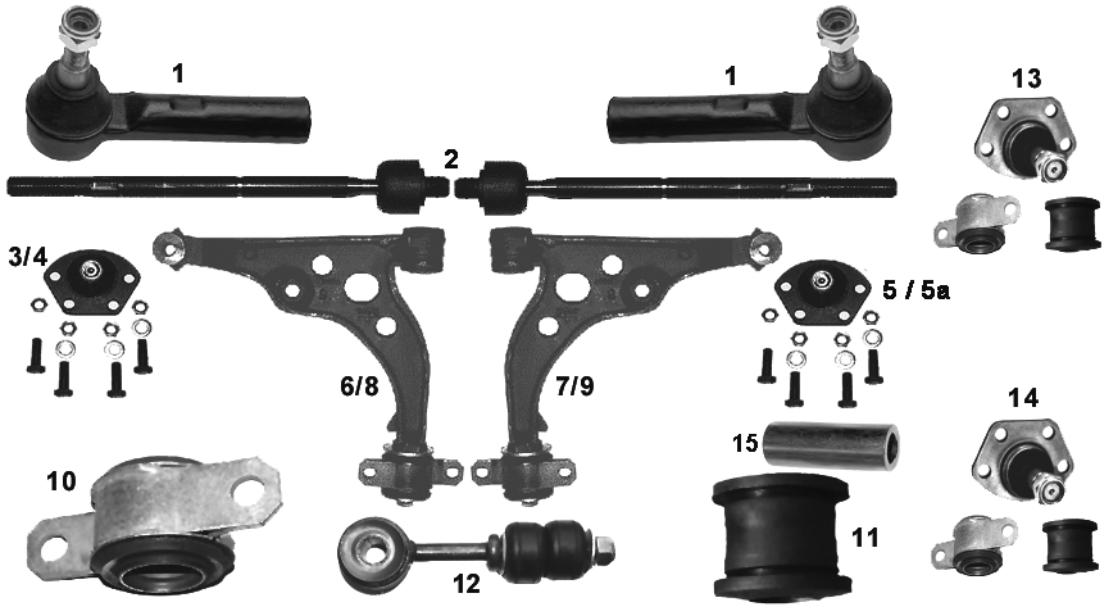

NR	MAPCO	REF			←	→	↑	↓			NEW	INFO
1	**19447**	1306716080	✓		✓	✓			✓	✓		→12/2002 M16x1,5RHT 120,0mm
1a	**19099**	1331640080	✓		✓	✓			✓	✓	✓	12/2002→ M16x1,5RHT
2	**19448**	14716544080	✓		✓	✓			✓			M16 x 1,5
3	**19449**	1302368080	✓		✓	✓			✓	✓		✓ (1.0t-1.4t) ø 17,0mm
4	**19450**	1300473080	✓		✓	✓			✓	✓		✓ (1.8t) ø 20,0mm
5	**19498**	1331640080	✓		✓	✓		✓	✓	✓	✓	✓ (1.0t-1.4t) ø 20,0mm
5a	**19499**	1331641080	✓		✓	✓			✓	✓	✓	✓ (1.8t) ø 24,0mm
6	**19461**	1320786080	✓			✓			✓	✓		✓ (1.0t-1.4t)
7	**19462**	1317241080	✓		✓				✓	✓		✓ (1.8t)
8	**19463**	1317238080	✓			✓			✓	✓		✓ (1.8t)
9	**19464**	1317239080	✓		✓	✓			✓	✓		
10	**33006**	352393	✓		✓	✓			✓	✓		
11	**33006/1**	352505	✓		✓	✓			✓	✓		Hülse
12	**19366**	508737	✓		✓	✓			✓	✓		
13	**19251**		✓		✓	✓			✓	✓		Kit ✓ (1.0t-1.4t)
14	**19250**		✓		✓	✓			✓	✓		Kit ✓ (1.8t)

FIAT DUCATO (244) 04/02→

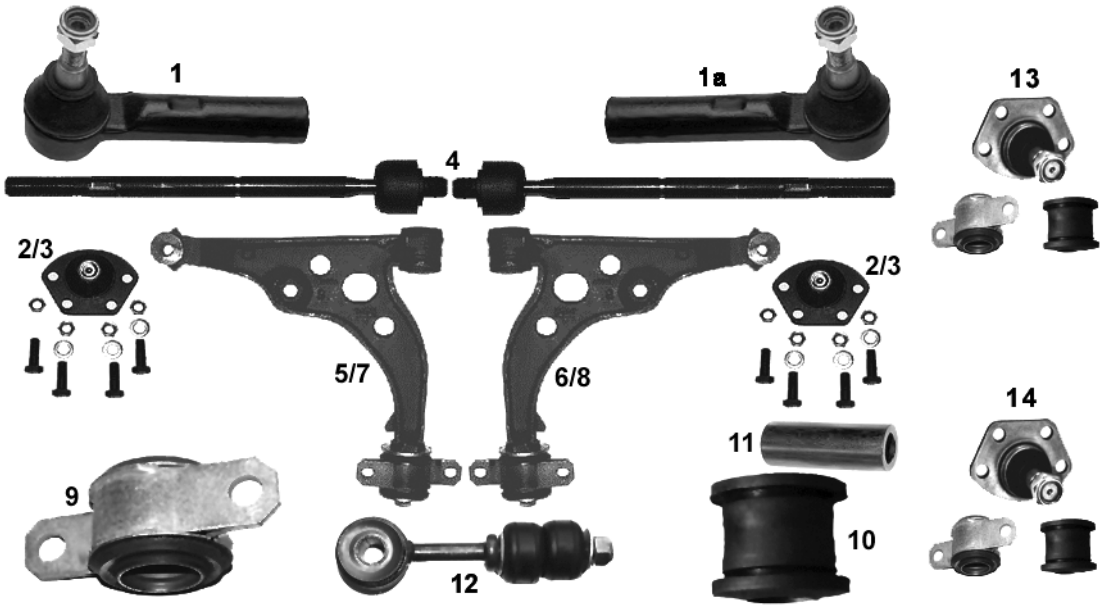

NR	MAPCO	REF									NEW	INFO
1	**19447**	1306716080	✓		✓	✓			✓	✓		→12/2002 M16x1,5RHT 120,0mm
1a	**19099**	77362278	✓		✓	✓			✓	✓	✓	12/2002→ M16x1,5RHT
2	**19498**	1331640080	✓		✓	✓		✓	✓	✓	✓	✓ (1.0t-1.4t) ø 20,0mm
3	**19499**	1331641080	✓		✓	✓			✓	✓	✓	✓ (1.8t) ø 24,0mm
4	**19448**	14716544080	✓		✓	✓			✓			M16 x 1,5
5	**49084**	1331938080	✓		✓				✓	✓		✓ (1.0t-1.4t)
6	**49085**	1331940080	✓			✓			✓	✓		✓ (1.0t-1.4t)
7	**49086**	1339464080	✓		✓				✓	✓		✓ (1.8t)
8	**49087**	1331939080	✓			✓			✓	✓		✓ (1.8t)
9	**33001**	352394	✓		✓	✓			✓	✓		
10	**33006**	352393	✓		✓	✓			✓	✓		
11	**33006/1**	352505	✓		✓	✓			✓	✓		Hülse
12	**19366**	508737	✓		✓	✓			✓	✓		
13	**19251**		✓		✓	✓			✓	✓		Kit ✓ (1.0t-1.4t)
14	**19250**		✓		✓	✓			✓	✓		Kit ✓ (1.8t)

FIAT DUCATO 07/06→



NR	MAPCO	REF			←	→	↑	↓			NEW	INFO
1	**19496**	77364253	✓		✓				✓	✓	✓	
2	**19497**	77364009	✓			✓			✓	✓	✓	
3	**19494**	1352227080	✓		✓				✓	✓	✓	✓ (1.0t-1.7t)
4	**19495**	1352225080	✓			✓			✓	✓	✓	✓ (1.0t-1.7t)
5	**49099**	50705629	✓		✓	✓			✓	✓	✓	ø 24mm

FIAT DUNA (146 B) 01/87→ 12/91



NR	MAPCO	REF			←	→	↑	↓			NEW	INFO
1	**19047**	5958246	✓		✓	✓			✓	✓		M12x1,5RHT
2	**19050**	7705615	✓		✓				✓	✓		
3	**19051**	7705616	✓			✓			✓	✓		

FIAT FIORINO (146) 01/88→ 05/01

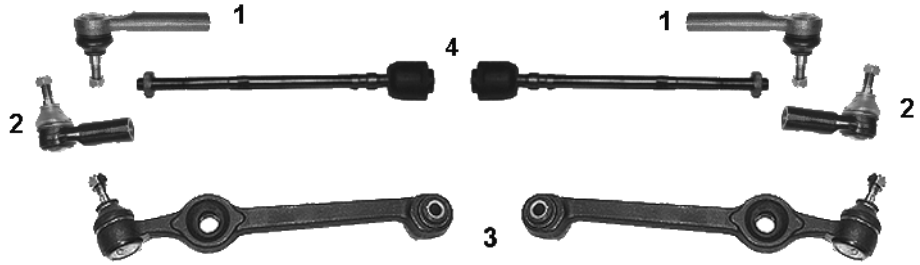

NR	MAPCO	REF								NEW	INFO
1	**49010**	7690960 50006262	✓		✓	✓			✓	✓		M14x1,5RHT
2	**49011**	7693816	✓		✓	✓			✓	✓		M16x1,5RHT
3	**49012**	7674825	✓		✓	✓			✓	✓		Chassis 8157358→
4	**19043**	7076231	✓		✓	✓			✓	✓		M12x1,5RHT

FIAT FIORINO Kasten 02/08→



NR	MAPCO	REF								NEW	INFO
1	**59012**	7736 3829	✓		✓				✓	✓		
2	**59013**	7736 3830	✓			✓			✓	✓		
3	**19097**	5178 3057	✓		✓				✓	✓		
4	**19098**	5178 3056	✓			✓			✓	✓		
5	**49092**		✓		✓	✓			✓	✓		
6	**33044**		✓		✓	✓			✓	✓		
7	**33045**		✓		✓	✓			✓	✓		
8	**59026H**	55700753	✓		✓	✓			✓	✓	✓	

FIAT GRANDE PUNTO (199) 10/05 →



NR	MAPCO	REF									NEW	INFO
1	**59012**	51783057	✓		✓				✓	✓		
2	**59013**	77363829	✓			✓			✓	✓		
3	**19097**	55703629	✓		✓				✓	✓		
4	**19098**	55703627	✓			✓			✓	✓		
5	**49092**	77363830	✓		✓	✓			✓	✓		
6	**33044**	55703232	✓		✓	✓			✓	✓		
7	**33045**	55700751	✓		✓	✓			✓	✓		
8	**59026HPS**	55700753	✓		✓	✓			✓	✓	✓	

FIAT IDEA 12/03→

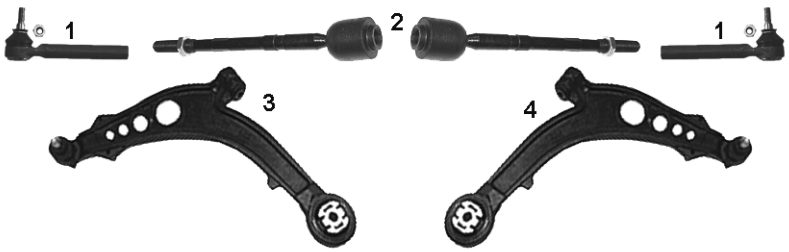

NR	MAPCO	REF									NEW	INFO
1	**49059**	77362503	✓		✓	✓			✓	✓		M14x1,5RHT
2	**49071**	77362502	✓		✓	✓			✓	✓		M14x1,5
3	**49078**	50703232	✓		✓				✓	✓		
4	**49079**	50703231	✓			✓			✓	✓		

FIAT LINEA 06/07→

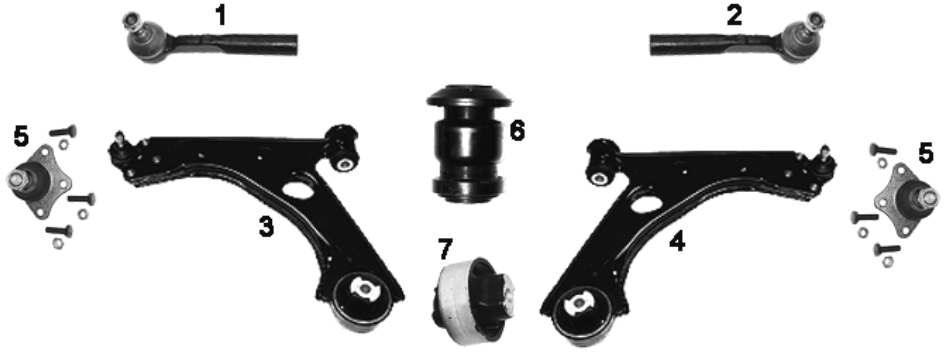

NR	MAPCO	REF									NEW	INFO
1	**59012**	51783057	✓		✓				✓	✓	✓	
2	**59013**	77363829	✓			✓			✓	✓	✓	
3	**19097**	55703629	✓		✓				✓	✓		
4	**19098**	55703627	✓			✓			✓	✓		
5	**49092**	77363830	✓		✓	✓			✓	✓	✓	
6	**33044**	55703232	✓		✓	✓			✓	✓		
7	**33045**	55700751	✓		✓	✓			✓	✓		

FIAT MAREA + MAREA WEEKEND (185) 09/96→

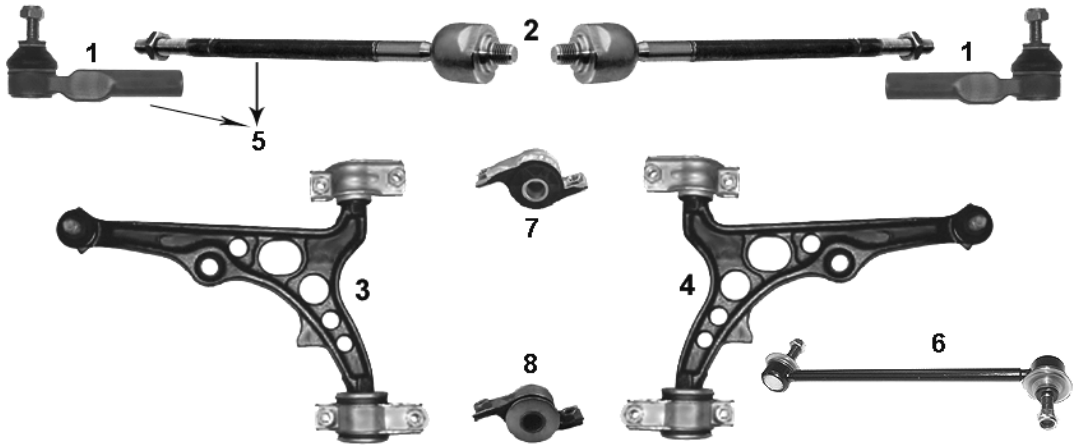

NR	MAPCO	REF									NEW	INFO
1	**19015**	9947714	✓		✓	✓			✓	✓		M14x1,5RHT STOP 2.0, 2.4TD, 2.4JTD
1	**49098**	9947926	✓		✓	✓			✓	✓	✓	M14x1,5RHT ✓ 2.0, 2.4TD, 2.4JTD
2	**19023**	9947713	✓		✓	✓			✓	✓		M14x1,5RHT
3	**19009**	46474556	✓		✓				✓	✓		✓
4	**19010**	46474557	✓			✓			✓	✓		✓
5	**19023/1**		✓		✓	✓			✓	✓		**1 + 2**
6	**19026HPS**	46413122	✓		✓	✓			✓	✓		
7	**33019**	7601065	✓		✓				✓	✓		
8	**33035**	7601068	✓			✓			✓	✓		

FIAT MULTIPLA (186) 04/99→

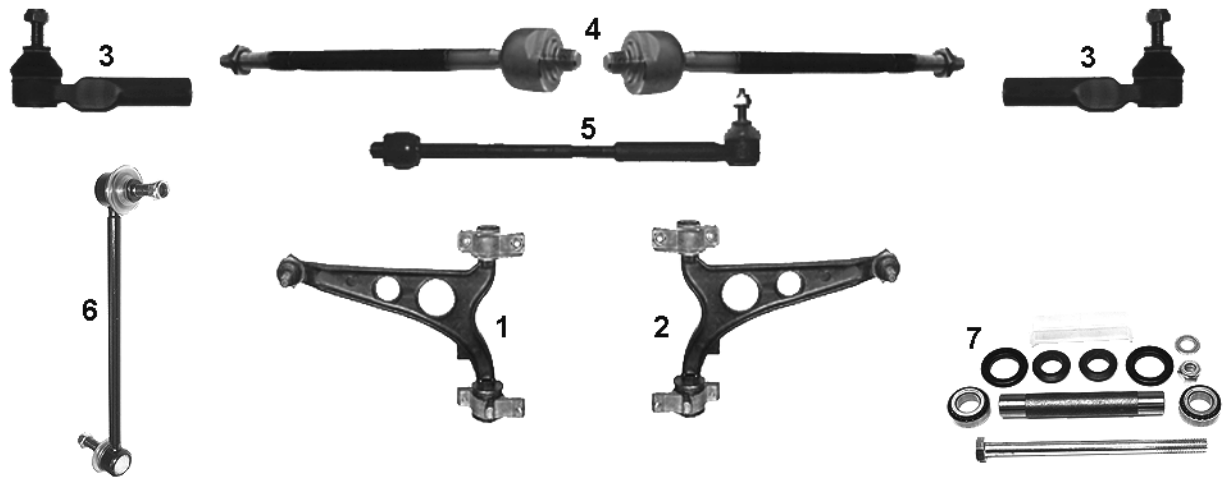

NR	MAPCO	REF									NEW	INFO
1	**49064**	46764746	✓		✓				✓	✓		
2	**49065**	46764747	✓			✓			✓	✓		
3	**19015**	9947714	✓		✓	✓			✓	✓		M14x1,5RHT
4	**19023**	9947713	✓		✓	✓			✓	✓		M14x1,5RHT
5	**19023/1**		✓		✓	✓			✓	✓		**3 + 4**
6	**19026HPS**	46413122	✓		✓	✓			✓	✓		
7	**34053**	17736515		✓	✓	✓			✓	✓		

FIAT PALIO, PALIO Weekend (178DX) 04/96→

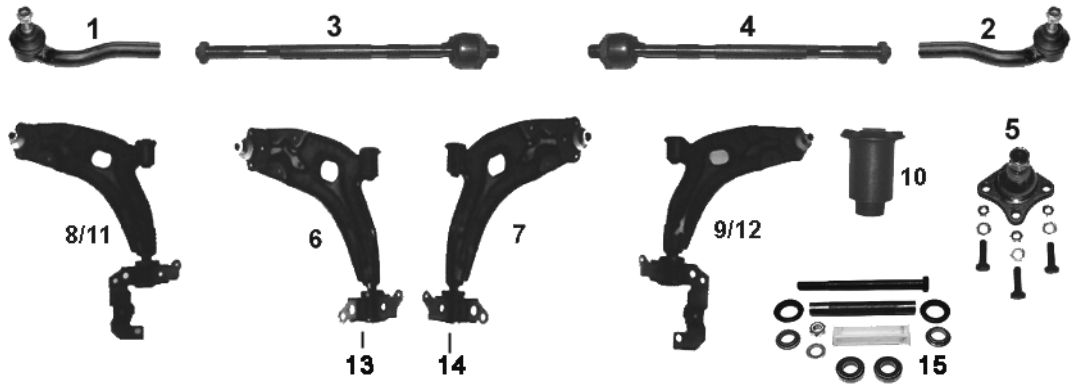

NR	MAPCO	REF			←	→	↑	↓			NEW	INFO
1	**49017**	46745364	✓		✓	✓			✓	✓		M14x1,5RHT
2	**49018**	46745365	✓		✓	✓			✓	✓		M14x1,5RHT
3	**49019**	7079383	✓		✓	✓				✓		
4	**49020**	7079382	✓		✓	✓			✓			
5	**49021**	46437951	✓		✓	✓			✓	✓		
6	**49022**	46454595	✓		✓					✓		**01/98→**
7	**49023**	46454596	✓			✓				✓		**01/98→**
8	**49024**	46454597	✓		✓				✓	✓		
9	**49025**	46454598	✓			✓			✓	✓		
10	**33018**	46421522	✓		✓	✓			✓	✓		
11	**49051**	46546777	✓		✓				✓			
12	**49052**	46546776	✓			✓			✓			
13	**33046**	46454062	✓		✓				✓	✓	✓	
14	**33047**	46454061	✓			✓			✓	✓	✓	
15	**34054**			✓	✓	✓			✓	✓		

FIAT PANDA (141A_) 03/80→07/04

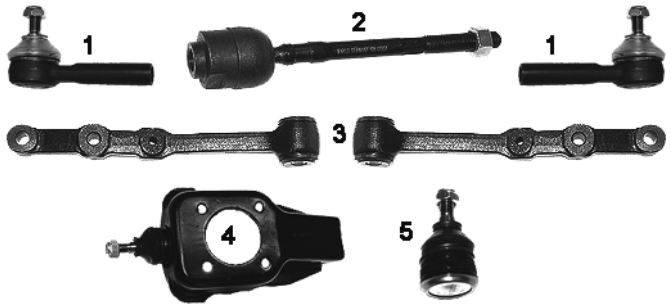

NR	MAPCO	REF			←	→	↑	↓			NEW	INFO
1	**19046**	5960835	✓		✓	✓				✓		10/82→ M12x1,5RHT
2	**19452**	5960321	✓		✓	✓				✓		M12x1,5RH
3	**19045**	4402672	✓		✓	✓				✓		
4	**19048**	7585137	✓		✓	✓				✓		
5	**19044**	4402649	✓		✓	✓				✓		

FIAT PANDA (169) 09/03→



NR	MAPCO	REF									NEW	INFO
1	**49057**	77362507	✓		✓				✓	✓		M12x1,5LHT
2	**49058**	77362508	✓			✓			✓	✓		M12x1,5RHT
3	**49072**	77362506	✓		✓	✓			✓	✓		
4	**49054**	50703128	✓		✓				✓	✓		STOP 1.4 16V
5	**49055**	50703129	✓			✓			✓	✓		STOP 1.4 16V
6	**49066HPS**	50703296	✓		✓	✓			✓	✓		315 mm
7	**33069**		✓		✓	✓		✓	✓	✓	✓	

FIAT PUNTO (176) 09/93→ 09/99

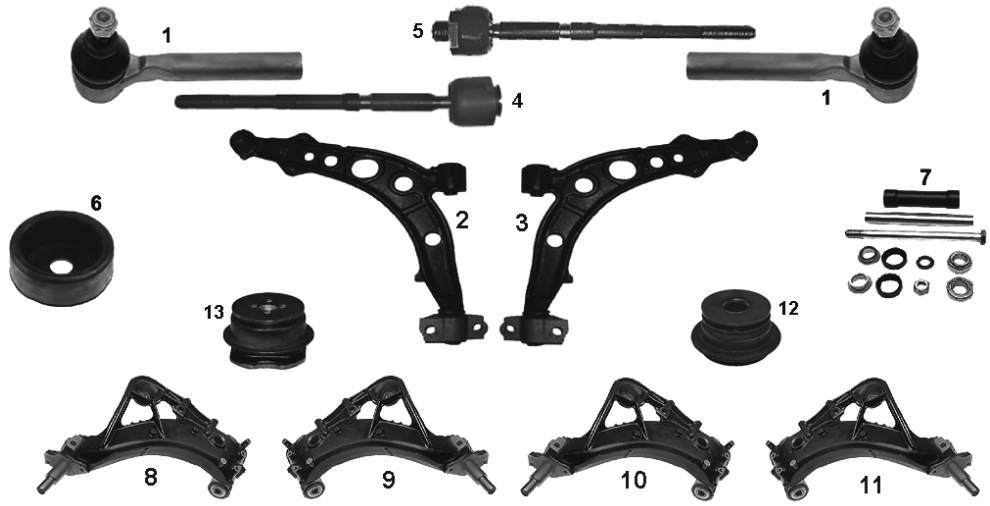

NR	MAPCO	REF									NEW	INFO
1	**19065**	9946949	✓		✓	✓			✓	✓		M12x1,5RHT
2	**19066**	46430002	✓		✓	✓			✓	✓		
3	**19067**	46430003	✓		✓	✓			✓	✓		
4	**19068**	7701491	✓		✓	✓				✓		M12x1,5RHT
5	**19079**	9945562	✓		✓	✓			✓			
6	**33005**	46476755		✓	✓	✓			✓	✓		
7	**34053**	17736515		✓	✓	✓			✓	✓		
8	**49060**	7736514		✓	✓				✓	✓		~~**ABS**~~
9	**49061**	7736515		✓		✓			✓	✓		~~**ABS**~~
10	**49062**	7769900		✓	✓				✓	✓		**ABS**
11	**49063**	7769901		✓		✓			✓	✓		**ABS**
12	**33039**	7755671		✓	✓	✓			✓	✓		**vorn/front**
13	**33040**	7756218		✓	✓	✓			✓	✓		**hinten/rear**

FIAT PUNTO (188) 09/99→



NR	MAPCO	REF									NEW	INFO
1	**33011**		✓		✓	✓		✓	✓	✓		
2	**33012**		✓		✓	✓		✓	✓	✓		
3	**19024**	9948343	✓		✓	✓			✓	✓		M12x1,5RHT
4	**49044**	46545660	✓		✓			✓		✓		
5	**49045**	46545661	✓			✓		✓	✓	✓		

FIAT QUBO 09/08→



NR	MAPCO	REF									NEW	INFO
1	**59012**	51783057	✓		✓				✓	✓		
2	**59013**	77363829	✓			✓			✓	✓		
3	**19097**	55703629	✓		✓				✓	✓		
4	**19098**	55703627	✓			✓			✓	✓		
5	**49092**	77363830	✓		✓	✓			✓	✓	✓	
6	**33044**	55703232	✓		✓	✓			✓	✓		
7	**33045**	55700751	✓		✓	✓			✓	✓		

FIAT SEDICI 06/06→



NR	MAPCO	REF									NEW	INFO
1	**59024**	71742688	✓		✓	✓			✓	✓	✓	

FIAT STILO (192) 10/01→
FIAT STILO Multi Wagon (192) 01/03→

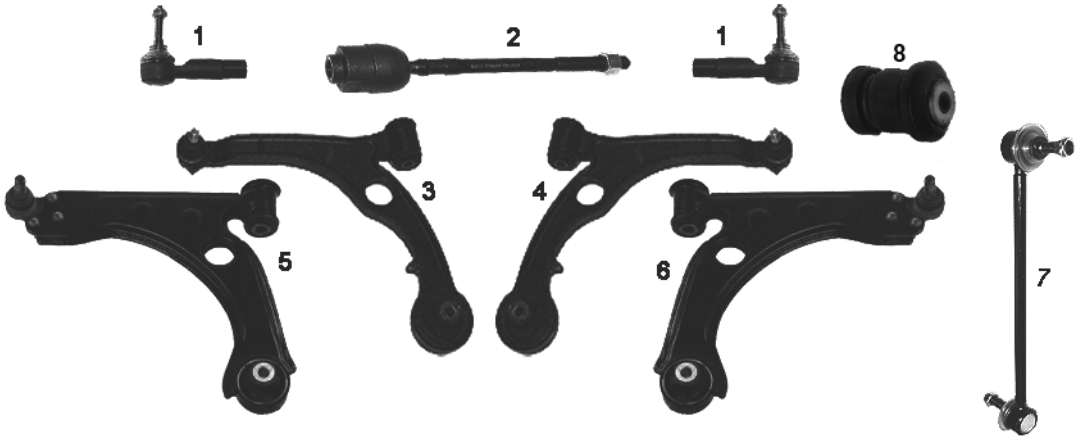

NR	MAPCO	REF								NEW	INFO
1	**49040**	9949218	✓		✓	✓			✓	✓		
2	**49043**	9949217	✓		✓	✓			✓	✓		
3	**49041**	50705083	✓		✓				✓	✓		→09/06
4	**49042**	50705084	✓			✓			✓	✓		→09/06
5	**49094**	50705464	✓		✓				✓	✓		10/06→
6	**49095**	50705465	✓			✓			✓	✓		10/06→
7	**19028HPS**	50700941	✓		✓	✓			✓	✓		
8	**33057**	50704252	✓		✓	✓			✓	✓	✓	

FIAT STRADA (178E) 06/99→

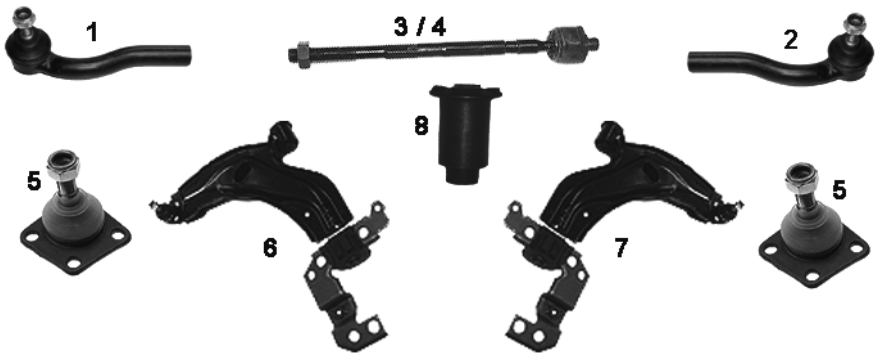

NR	MAPCO	REF									NEW	INFO
1	**49017**	46745364	✓		✓	✓			✓	✓		M14x1,5RHT
2	**49018**	46745365	✓		✓	✓			✓	✓		M14x1,5RHT
3	**49091**	7081842	✓		✓	✓				✓	✓	
4	**49070**	7081851	✓		✓	✓			✓			
5	**49038**	7081835	✓		✓	✓			✓	✓		→ 07/01
6	**49036**	51866701	✓		✓				✓	✓		09/2002 →
7	**49037**	51866700	✓			✓			✓	✓		09/2002 →
8	**33018**	46421522	✓		✓	✓		✓	✓	✓		

FIAT TEMPRA (159)
FIAT TIPO (160)

03/90→08/97
07/87→04/95

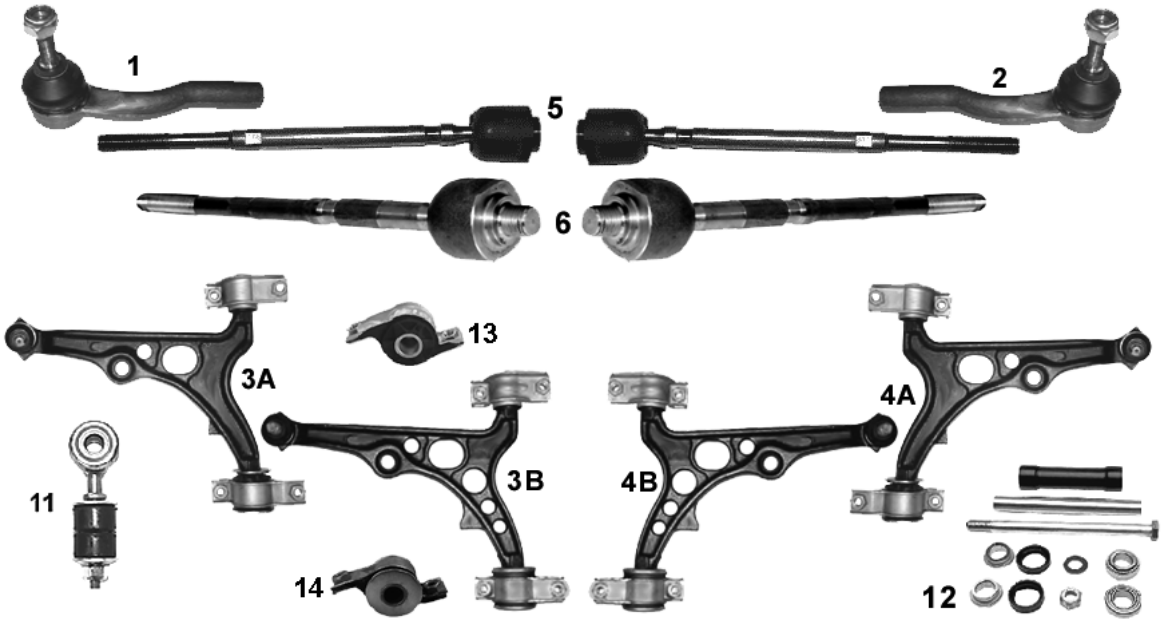

NR	MAPCO	REF									NEW	INFO
1	**19052**	7591216	✓		✓	✓			✓	✓		M12x1,5RHT
2	**19053**	7591215	✓		✓	✓			✓	✓		M12x1,5RHT
3A	**19054**	7601057	✓		✓				✓	✓		→06/90 Ø 15 mm
3B	**19056**	82461081	✓		✓				✓	✓		07/90→ Ø 17 mm
4A	**19055**	76010373	✓			✓			✓	✓		→06/90 Ø 15 mm
4B	**19057**	82461082	✓			✓			✓	✓		07/90→ Ø 17 mm
5	**19043**	7633721	✓		✓	✓				✓		M12x1,5RHT
6	**19022**	9941625	✓		✓	✓			✓			M12x1,5RHT
7	**19022/1**		✓		✓	✓			✓			**1 + 6**
8	**19022/2**		✓		✓	✓			✓			**2 + 6**
9	**19049/1**		✓		✓	✓				✓		**1 + 5**
10	**19049/2**		✓		✓	✓				✓		**2 + 5**
11	**33009**	60809242	✓		✓	✓			✓	✓		
12	**34054**			✓	✓	✓			✓	✓		
13	**33019**	7601065	✓		✓				✓	✓		
14	**33035**	7601068	✓			✓			✓	✓		

FIAT ULYSSE (220)
FIAT SCUDO (220_)

06/94→ 08/02
02/96→

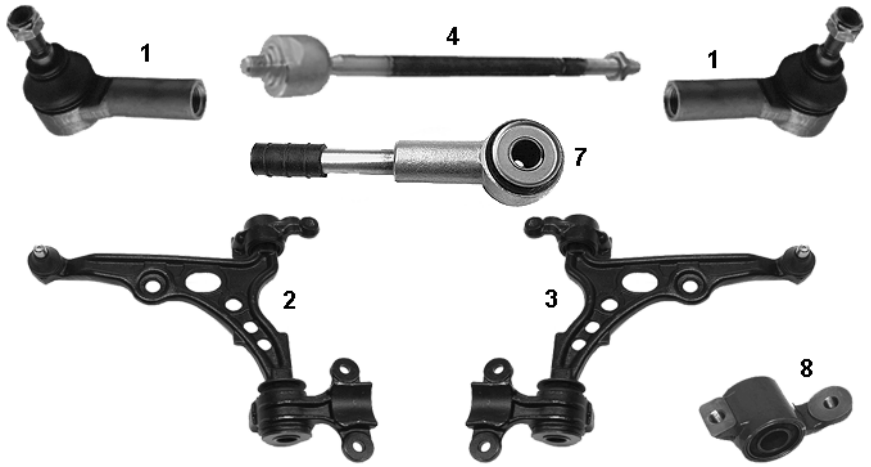

NR	MAPCO	REF										INFO
1	**19430**	9404059080	✓		✓	✓			✓	✓		M14x1,5RHT
2	**19431**	1313083080	✓		✓				✓	✓		
3	**19432**	1313084080	✓			✓			✓	✓		
4	**19023**	9566950880	✓		✓	✓			✓	✓		M14x1,5RHT
5	**19363**	130866480	✓		✓	✓			✓	✓		
6	**33017**	1312317080	✓		✓	✓			✓	✓		

FIAT ULYSSE (179AX)

08/02→

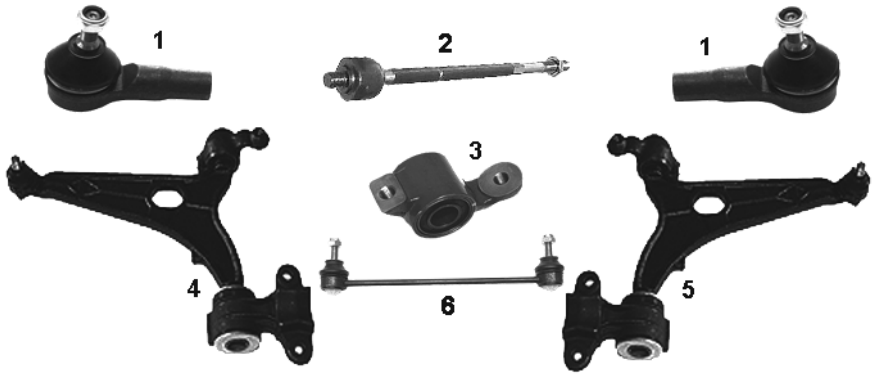

NR	MAPCO	REF										INFO
1	**19492**	77362279	✓		✓	✓			✓	✓		M14x1,5
2	**19493**	77362280	✓		✓	✓			✓	✓		M14x1,5
3	**33017**	1312317080	✓		✓	✓			✓	✓		
4	**49082**	1346384080	✓		✓				✓	✓		
5	**49083**	1346385080	✓			✓			✓	✓		
6	**19376HPS**	1331209080	✓		✓	✓			✓	✓		

FIAT UNO (146A/E) 01/87→ 08/00

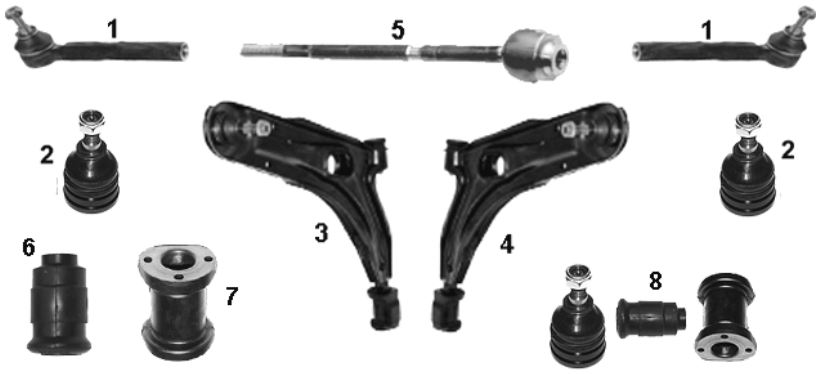

NR	MAPCO	REF									NEW	INFO
1	**19047**	5958246	✓		✓	✓			✓	✓		M12x1,5RHT
2	**19044**	4402649	✓		✓	✓			✓	✓		
3	**19050**	7705615	✓		✓				✓	✓		
4	**19051**	7705616	✓			✓			✓	✓		
5	**19043**	7633721	✓		✓	✓				✓		280,0mm M12x1,5RHT
6	**33002**	5927292	✓		✓	✓		✓	✓	✓		
7	**33003**	5927293	✓		✓	✓		✓	✓	✓		
8	**19244**		✓		✓	✓		✓	✓	✓		Kit

FORD

FORD COURIER (F3L, F5L) 02/96→

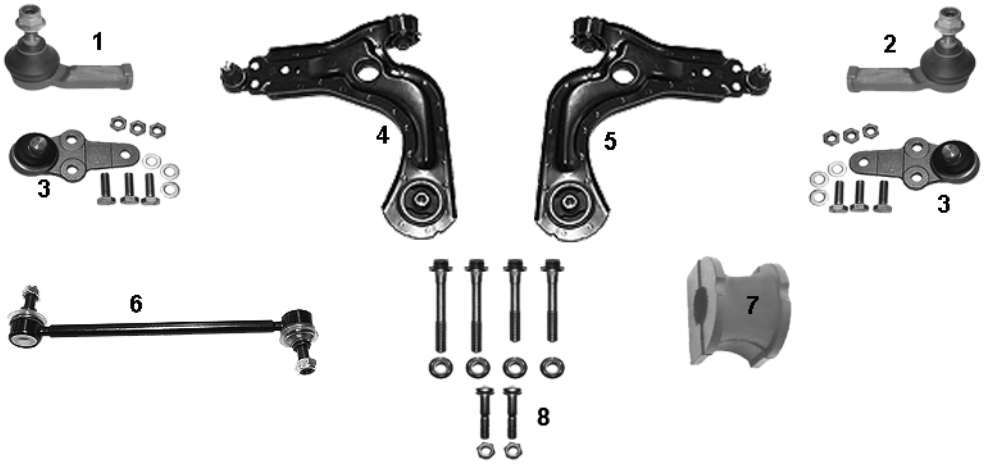

NR	MAPCO	REF									NEW	INFO
1	**19640**	1011858	✓		✓				✓	✓		M14x1,5RHT
2	**19641**	1011857	✓			✓			✓	✓		M14x1,5RHT
3	**19763**	5021410	✓		✓	✓			✓	✓		16,5 mm
4	**19656**	1020221	✓		✓				✓	✓		
5	**19657**	1020219	✓			✓			✓	✓		
6	**19608HPS**	1004018	✓		✓	✓			✓	✓		238 mm
7	**33670**	1102771	✓		✓	✓			✓	✓		
8	**95642**		✓		✓	✓			✓	✓		MS

FORD ESCORT II

03/73→ 08/80

NR	MAPCO	REF									NEW	INFO
1	**19727**	6128814	✓		✓	✓			✓	✓		½ x 20 UNF RHT  **1**

FORD ESCORT III
FORD ORION I

06/83→12/85
07/83→03/86

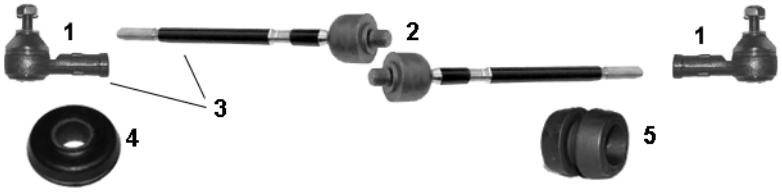

NR	MAPCO	REF									NEW	INFO
1	**19727**	6128814	✓		✓	✓			✓	✓		½ x 20 UNF RHT
2	**19723**	6127726	✓		✓	✓			✓	✓		½“ x 20 RHT-M14x1,5
3	**19723/1**		✓		✓	✓			✓	✓		**1 + 4**
4	**33611**	5021661	✓		✓	✓			✓	✓		
5	**33610**	6087890	✓		✓	✓			✓	✓		

FORD ESCORT IV
FORD ORION II

01/86→10/90

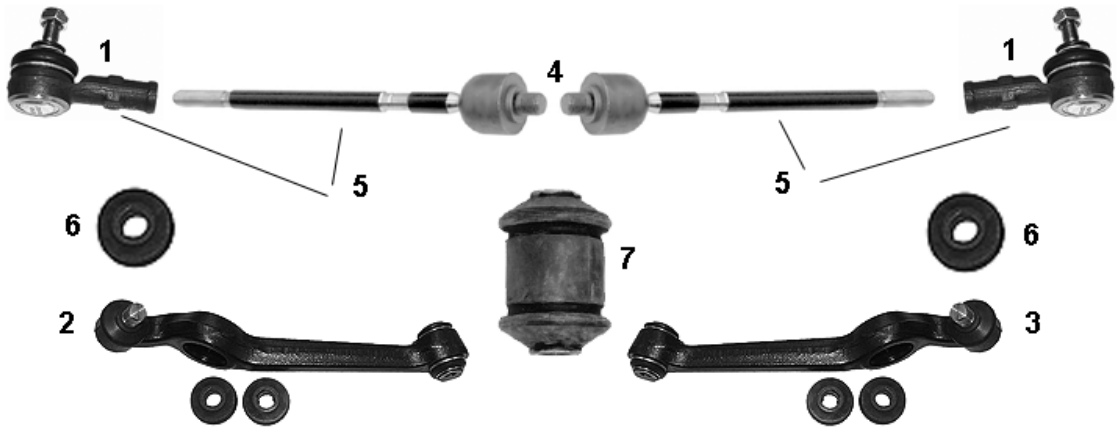

NR	MAPCO	REF									NEW	INFO
1	**19727**	6128814	✓		✓	✓			✓	✓		½ x 20 UNF RHT
2	**19743/1**	5021459	✓		✓				✓	✓		03/86→11/90
3	**19744/1**	5021458	✓			✓			✓	✓		03/86→11/90
4	**19723**	6127726	✓		✓	✓			✓	✓		½“ x 20 RHT-M14x1,5
5	**19723/1**		✓		✓	✓			✓	✓		**1 + 4**
6	**33611**	5021661	✓		✓	✓			✓	✓		
7	**33609**	1619120	✓		✓	✓			✓	✓		

FORD ESCORT V, VI 07/90→01/95
FORD ORION III 07/90→12/93

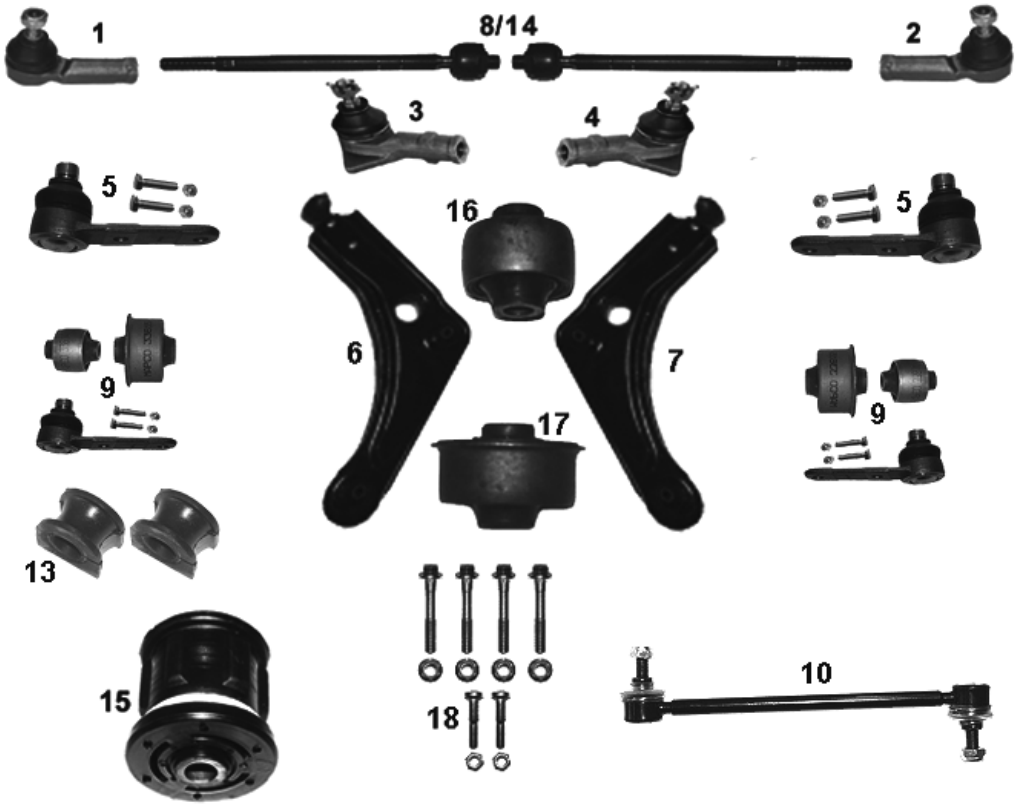

NR	MAPCO	REF								NEW	INFO
1	**19752**	6555938	✓		✓				✓	✓	STOP RS 2000 M14x2,0RHT
2	**19753**	6555936	✓			✓			✓	✓	STOP RS 2000 M14x2,0RHT
3	**19735**	6120232	✓		✓				✓	✓	✓ RS 2000 M14x2,0RHT
4	**19736**	6120231	✓			✓			✓	✓	✓ RS 2000 M14x2,0RHT
5	**19754**	6525844	✓		✓	✓			✓	✓	
6	**19760**	7351748	✓		✓				✓	✓	
7	**19761**	7351747	✓			✓			✓	✓	
8	**19724**	1024130	✓		✓	✓				✓	**WUELFRATH**
9	**19254**		✓		✓	✓			✓	✓	Kit
10	**19604HPS**	1661237	✓		✓	✓			✓	✓	
11	**19724/1**		✓		✓				✓	✓	**1 + 8**
12	**19724/2**		✓			✓			✓	✓	**2 + 8**
13	**33628/2**	(7102392)	✓		✓	✓			✓	✓	**Kit 2 x 33628**
14	**49737**	6197238	✓		✓	✓			✓		**TRW**
15	**33642**	1041979		✓	✓	✓			✓	✓	
16	**33614**	1000445	✓		✓	✓			✓	✓	
17	**33615**	1035929	✓		✓	✓			✓	✓	
18	**95760**		✓		✓	✓			✓	✓	MS

FORD ESCORT VII 01/95→10/98

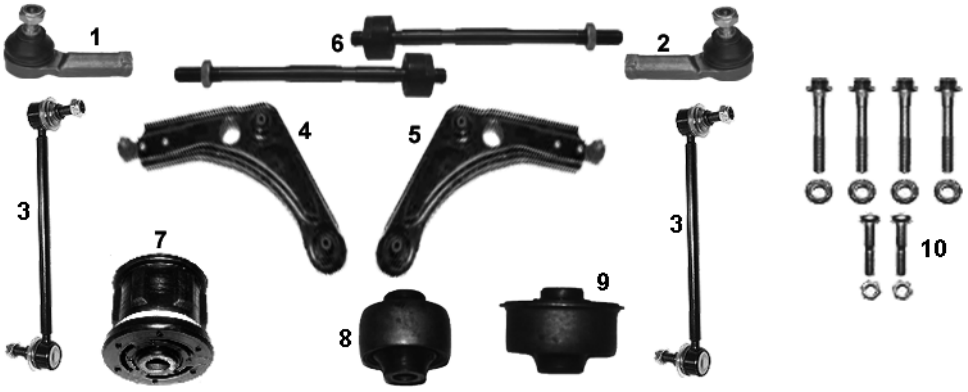

NR	MAPCO	REF										NEW	INFO
1	**19752**	6555938	✓		✓				✓	✓			M14x2,0RHT
2	**19753**	6555936	✓			✓			✓	✓			M14x2,0RHT
3	**19608HPS**	1661237	✓		✓	✓			✓	✓			238 mm
4	**19760**	7351748	✓		✓				✓	✓			
5	**19761**	7351747	✓			✓			✓	✓			
6	**49737**	6197238	✓		✓	✓			✓				TRW
7	**33642**	1041979		✓	✓	✓			✓	✓			
8	**33614**	1000445	✓		✓	✓			✓	✓			
9	**33615**	1035929	✓		✓	✓			✓	✓			
10	**95760**		✓		✓	✓			✓	✓			MS

FORD FIESTA I + FIESTA II (FBD) 05/76→ 11/89

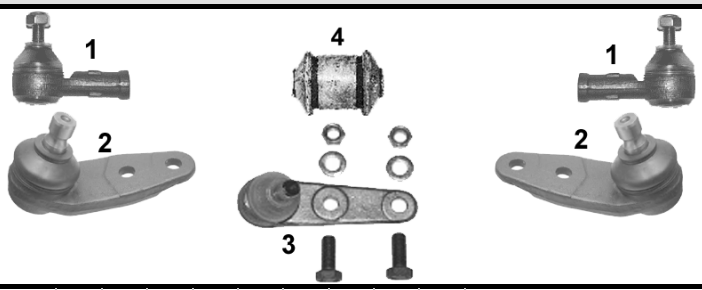

NR	MAPCO	REF										NEW	INFO
1	**19727**	6128814	✓		✓	✓			✓	✓			10/83→ ½“ x 20UNF RHT
2	**19721**	6111394	✓		✓	✓			✓	✓			→08/83
3	**19725**	6130560	✓		✓	✓			✓	✓			09/83→
4	**33609**	1619120	✓		✓	✓			✓	✓			Innen / inner

FORD FIESTA III (GFJ) 01/89 → 08/96
FORD FIESTA COURIER 02/94 → 07/96

NR	MAPCO	REF										NEW	INFO
1	**33600**		✓		✓	✓			✓	✓			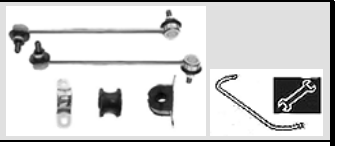
2	**33601**		✓		✓	✓			✓	✓			

FORD FIESTA III (GFJ) 01/89→12/93
FORD COURIER 07/91→12/93

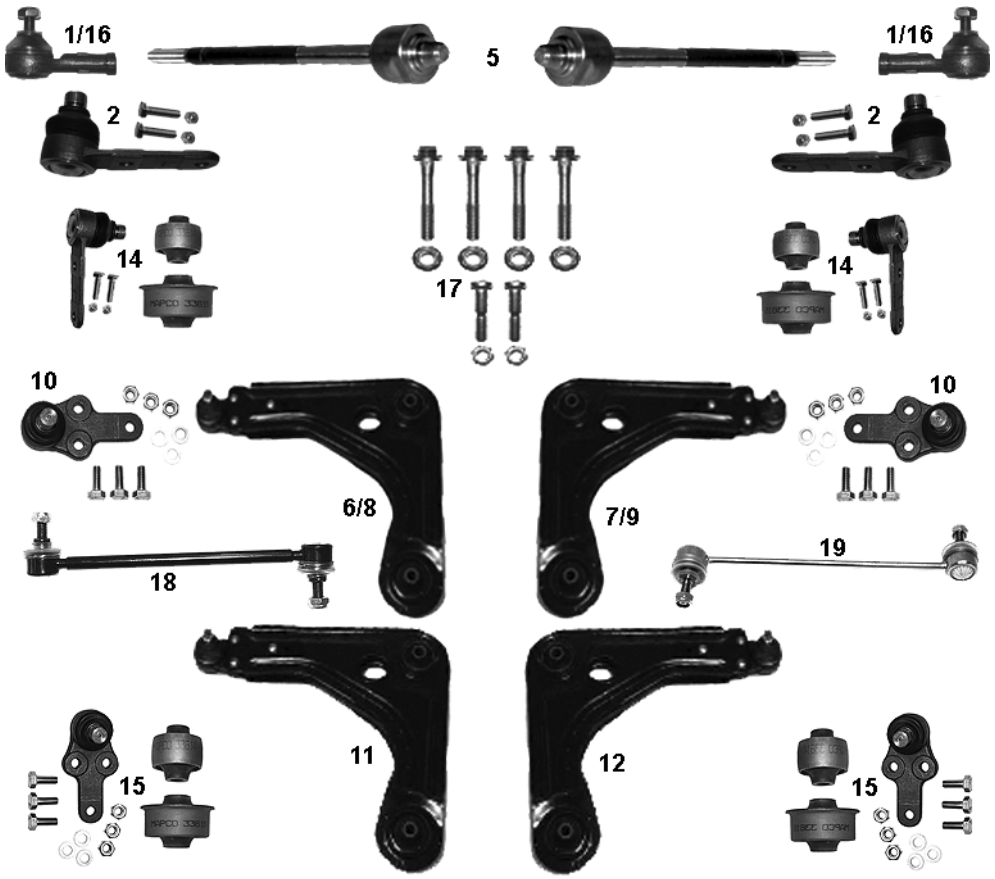

NR	MAPCO	REF									NEW	INFO
1	**19727**	6128814	✓		✓	✓			✓	✓		½“ x 20UNF RHT
2	**19754**	1047853	✓		✓	✓			✓	✓		
5	**19722**	1659374	✓		✓	✓			✓	✓		½ x 20 UNF
6	**19755/1**	7152281	✓		✓					✓		
7	**19756/1**	7152278	✓			✓				✓		
8	**19755/4**	7152280	✓		✓					✓		✓ 1.8 16V
9	**19756/4**	7152277	✓			✓				✓		✓ 1.8 16V
10	**19765**	1047798	✓		✓	✓				✓		Ø 17 mm
11	**19755/5**	7152279	✓		✓					✓		✓ XR2 Turbo 10/90→03/92
12	**19756/5**	7152276	✓			✓				✓		✓ XR2 Turbo 10/90→03/92
13	**19722/1**		✓		✓	✓			✓	✓		**1 + 5**
14	**19254**		✓		✓	✓			✓	✓		Kit
15	**19265**		✓		✓	✓			✓	✓		Kit
16	**19646**	6969518	✓		✓	✓			✓	✓		✓ TURBO - XR2, 1.8D - 1.8TD
17	**95760**		✓		✓	✓			✓	✓		MS
18	**19604HPS**	1061631	✓		✓	✓			✓	✓		Stahl/steel 238 mm
19	**51604**	1666243	✓		✓	✓			✓	✓		✓1.8 TD 03/93 → 261 mm

FORD FIESTA III (GFJ)
FORD COURIER

01/94→12/95
01/94→02/96

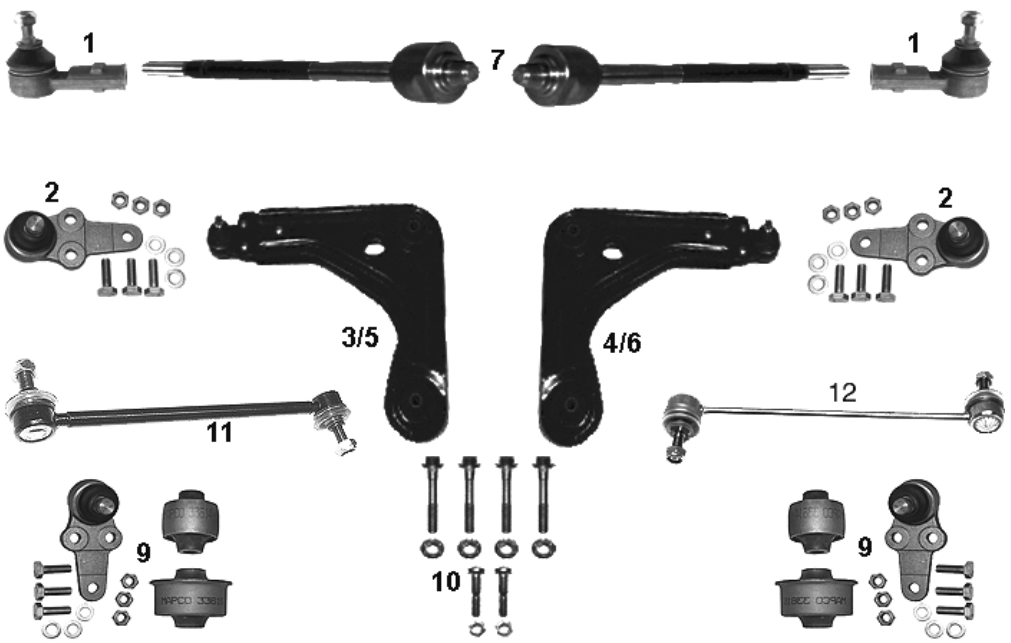

NR	MAPCO	REF			←	→	↑	↓			NEW	INFO
1	**19646**	6969518	✓		✓	✓			✓	✓		13,5 mm ½ X 20 UNF RHT
2	**19763**	1047797	✓		✓	✓			✓	✓		16,5 mm
3	**19755/2**	7152271	✓		✓					✓		
4	**19756/2**	7152269	✓			✓				✓		
5	**19755/3**	7152272	✓		✓				✓			
6	**19756/3**	7152270	✓			✓			✓			
7	**19722**	1659374	✓		✓	✓			✓	✓		½ x 20 UNF RHT
8	**19722/1**		✓		✓	✓			✓	✓		**1 + 7**
9	**19263**		✓		✓	✓			✓	✓		Kit
10	**95760**		✓		✓	✓			✓	✓		MS
11	**19604HPS**	1061631	✓		✓	✓			✓	✓		Stahl/steel 238 mm
12	**51604**	1666243	✓		✓	✓			✓	✓		✓1.8 TD 261 mm

FORD FIESTA IV (JA_, JB_) 08/95→01/02

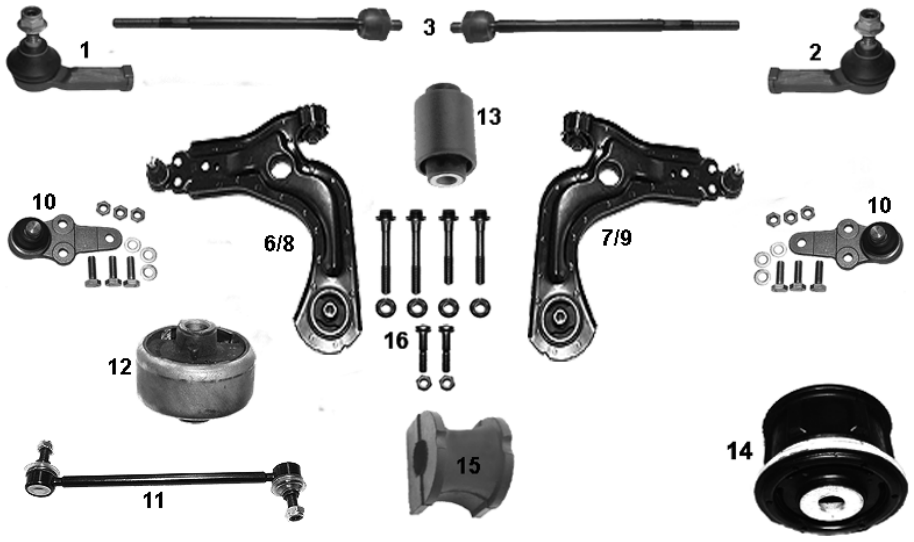

NR	MAPCO	REF								NEW	INFO
1	**19640**	1011858	✓		✓				✓	✓		M16x1,5RHT
2	**19641**	1011857	✓			✓			✓	✓		M16x1,5RHT
3	**19644**	1044014	✓		✓	✓			✓	✓		213 mm
4	**19644/1**		✓		✓				✓	✓		**3+1**
5	**19644/2**		✓			✓			✓	✓		**3+2**
6	**19642**	1020220	✓		✓					✓		STOP Courier
7	**19643**	1020214	✓			✓				✓		STOP Courier
8	**19642/1**	1021220	✓		✓				✓			STOP Courier
9	**19643/1**	1021219	✓			✓			✓			STOP Courier
10	**19763**	5021410	✓		✓	✓			✓	✓		16,5 mm
11	**19608HPS**	1004018	✓		✓	✓			✓	✓		238 mm
12	**33635**	1063372	✓		✓	✓			✓	✓		
13	**33636**	1055191	✓		✓	✓			✓	✓		
14	**33643**	7371059		✓	✓	✓			✓	✓		
15	**33670**	1102771	✓		✓	✓			✓	✓		**innen/innerØ 15mm**
16	**95642**		✓		✓	✓			✓	✓		MS

FORD FIESTA V (JH_) 11/01→

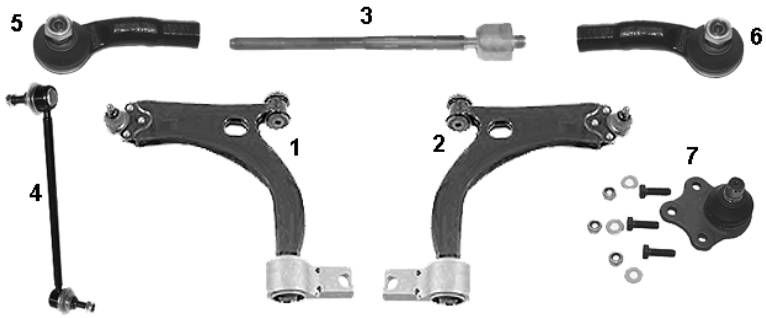

NR	MAPCO	REF								NEW	INFO
1	**59650**	1146131	✓		✓				✓	✓		
2	**59651**	1146130	✓			✓			✓	✓		
3	**59663**	4472940	✓		✓	✓			✓	✓		M14X1,5
4	**19774HPS**	1146150	✓		✓	✓			✓	✓		
5	**59669**	1202549	✓		✓				✓	✓		M12x1,5
6	**59670**	1202548	✓			✓			✓	✓		M12x1,5
7	**59671**	2S613395AB	✓		✓	✓			✓	✓		Ø 16,5mm

FORD FOCUS (D_ _) 10/98→11/04

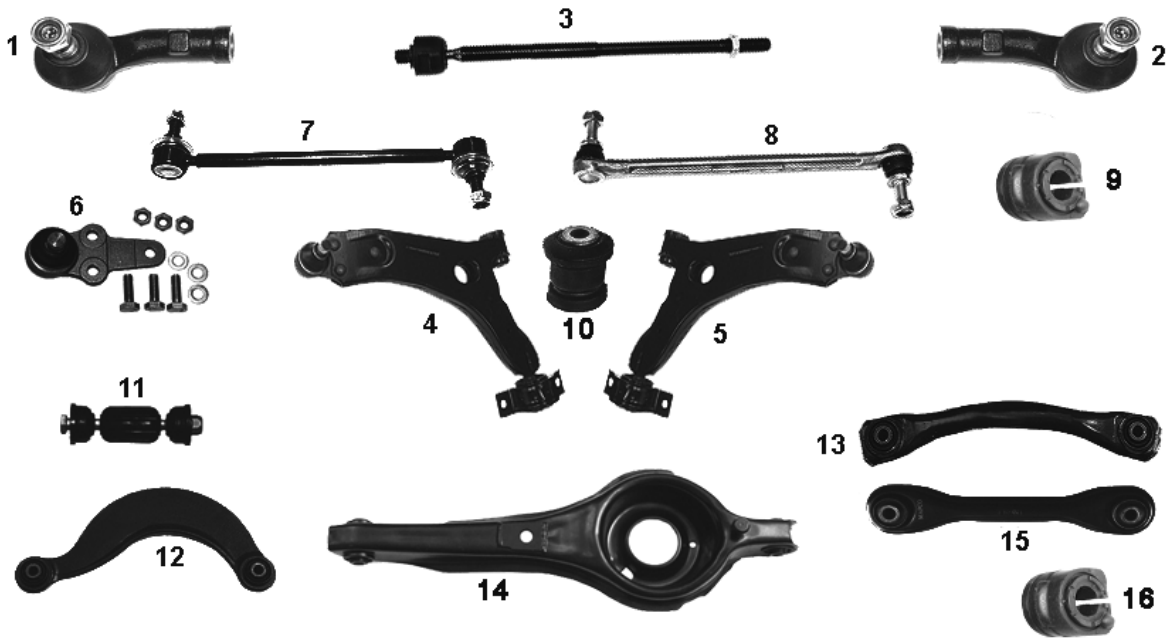

NR	MAPCO	REF								NEW	INFO
1	**19648**	1074306	✓		✓				✓	✓		M14 x 2,0 RHT
2	**19649**	1074305	✓			✓			✓	✓		M14 x 2,0 RHT
3	**19650**	3707333	✓		✓	✓			✓	✓		
4	**19651**	1207974	✓		✓				✓	✓		
5	**19652**	1073214	✓			✓			✓	✓		
6	**19653**	1212810	✓		✓	✓			✓	✓		17,5 mm
7	**19608HPS**	1661237	✓		✓	✓			✓	✓		Stahl/steel 238 mm
8	**19609HPS**	1107068	✓		✓	✓			✓	✓		Aluminium 238 mm
9	**33644**	1073217	✓		✓	✓			✓	✓		**innen/innerØ 18mm**
10	**33676**	1061570	✓		✓	✓		✓	✓	✓		Ø 35,0 mm
11	**59648**	1061702		✓	✓	✓			✓	✓		
12	**59646**	1061659		✓	✓	✓			✓	✓		
13	**51607**	1448127		✓	✓	✓			✓	✓		
14	**59647**	1064128		✓	✓	✓			✓	✓		
15	**59668**	1061668		✓	✓	✓			✓	✓		
16	**33671**	1073249		✓	✓	✓			✓	✓		**innen/innerØ 18mm**

Fortsetzung / continued (S.113)

FORD FOCUS (D_ _)

Fortsetzung / continued (S.112) 10/98→11/04



17



18



19



26



20



21



22



23



24



25

NR	MAPCO	REF									NEW	INFO
17	53612			✓	✓	✓			✓	✓		axle Kit
18	53613			✓	✓	✓			✓	✓		axle Kit
19	95647			✓	✓	✓			✓	✓	✓	MS
20	53612/1			✓	✓	✓			✓	✓	✓	axle Kit + MS
21	53613/1			✓	✓	✓			✓	✓	✓	axle Kit + MS
22	51605	4628835		✓	✓				✓	✓	✓	
23	51606	4628189		✓		✓			✓	✓	✓	
24	51609	4628841		✓	✓				✓	✓	✓	
25	51608	4628840		✓		✓			✓	✓	✓	
26	33678	1061670		✓	✓	✓			✓	✓	✓	

FORD FOCUS II 11/04→

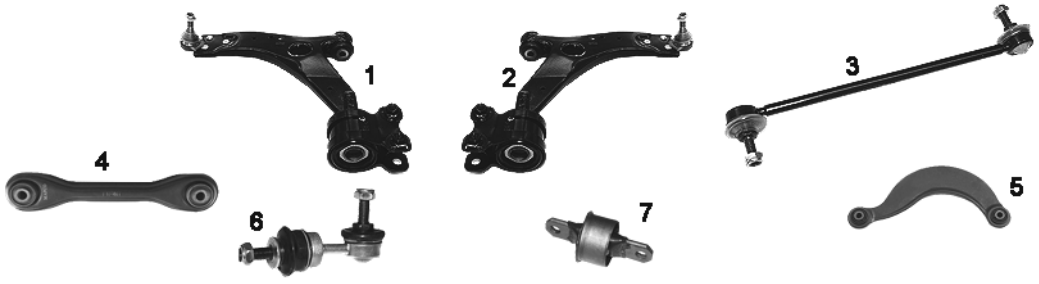

NR	MAPCO	REF			←	→	↑	↓			NEW	INFO
1	**51602**	1332075	✓		✓			✓	✓	✓		
2	**51603**	1332074	✓			✓		✓	✓	✓		
3	**59664HPS**	1230909	✓		✓				✓	✓		
4	**59668**	1061668		✓	✓	✓			✓	✓		
5	**59646**	1061659		✓	✓	✓			✓	✓		
6	**51610**	1310333		✓	✓	✓			✓	✓	✓	**76,5 mm**
7	**33678**	1061670		✓	✓	✓			✓	✓	✓	

FORD FOCUS C- MAX 10/03→ 03/07

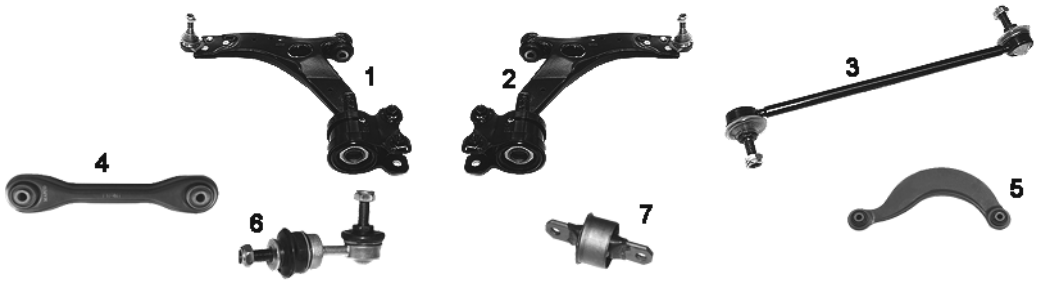

NR	MAPCO	REF			←	→	↑	↓			NEW	INFO
1	**51602**	1332075	✓		✓			✓	✓	✓		
2	**51603**	1332074	✓			✓		✓	✓	✓		
3	**59664HPS**	1230909	✓		✓				✓	✓		
4	**59668**	1061668		✓	✓	✓			✓	✓		
5	**59646**	1061659		✓	✓	✓			✓	✓		
6	**51610**	1310333		✓	✓	✓			✓	✓	✓	**76,5 mm**
7	**33678**	1061670		✓	✓	✓			✓	✓	✓	

FORD FUSION (JU_) 08/02→

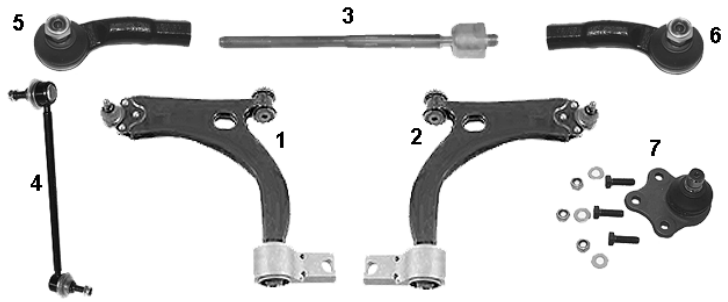

NR	MAPCO	REF								NEW	INFO
1	**59650**	1146131	✓		✓				✓	✓	
2	**59651**	1146130	✓			✓			✓	✓	
3	**59663**	4472940	✓		✓	✓			✓	✓	M14X1,5
4	**19774HPS**	1146150	✓		✓	✓			✓	✓	
5	**59669**	1202549	✓		✓				✓	✓	M12x1,5
6	**59670**	1202548	✓			✓			✓	✓	M12x1,5
7	**59671**	2S613395AB	✓		✓	✓			✓	✓	Ø 16,5mm

FORD GALAXY (WGR) 03/95→

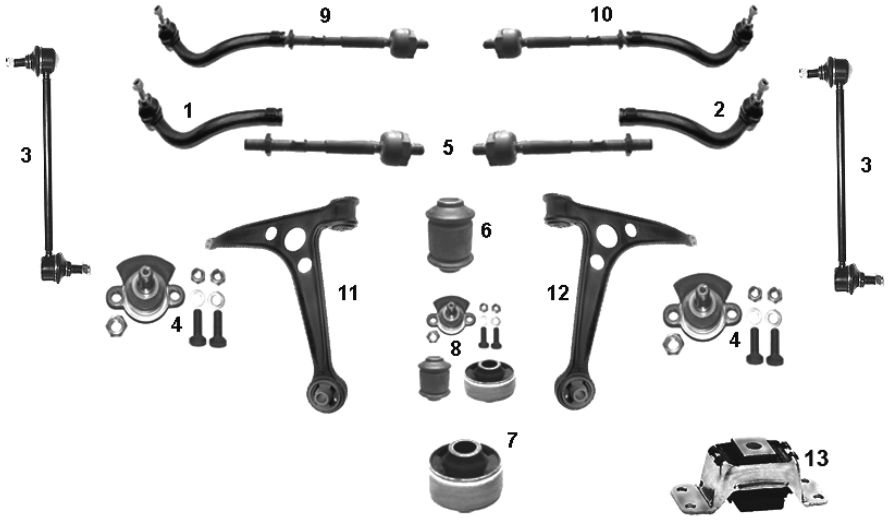

NR	MAPCO	REF								NEW	INFO
1	**49857**	1058380	✓		✓				✓	✓	M14x1,5 RHT
2	**49858**	1058378	✓			✓			✓	✓	M14x1,5 RHT
3	**49856HPS**	1009591	✓		✓	✓			✓	✓	
4	**49861**	7200946	✓		✓	✓			✓	✓	
5	**49866**	1092382	✓		✓	✓			✓	✓	
6	**33908**	7201717	✓		✓	✓			✓	✓	
7	**33928**	1044571	✓		✓	✓			✓	✓	
8	**19266**		✓		✓	✓			✓	✓	Kit
9	**49866/1**	1020497	✓		✓				✓	✓	
10	**49866/2**	1020496	✓			✓			✓	✓	
11	**49876**	1007602	✓		✓				✓	✓	
12	**49877**	1012632	✓			✓			✓	✓	
13	**33864**	7403748		✓	✓	✓			✓	✓	

FORD GALAXY 05/06→

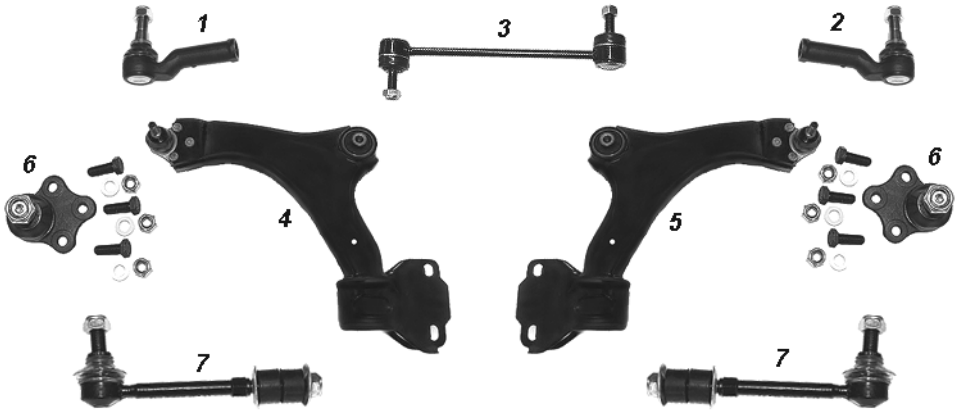

NR	MAPCO	REF									NEW	INFO
1	**51619**	1433274	✓		✓				✓	✓	✓	M18x1,5
2	**51620**	1433273	✓			✓			✓	✓	✓	M18x1,5
3	**51621**	1377849	✓		✓	✓			✓	✓	✓	
4	**51622**	1507182	✓		✓				✓	✓	✓	
5	**51623**	1507181	✓			✓			✓	✓	✓	
6	**51624**	No OE ref	✓		✓	✓			✓	✓	✓	
7	**51625**	1425853		✓	✓	✓			✓	✓	✓	

FORD KA (RB_) 09/96→

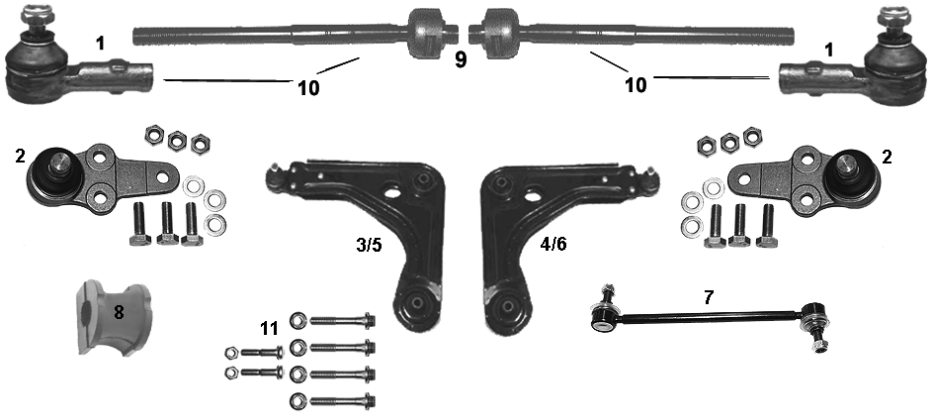

NR	MAPCO	REF									NEW	INFO
1	**19645**	1034417	✓		✓				✓	✓		½ x20 UNF RHT
2	**19763**	1047797	✓			✓			✓	✓		Ø 16,5 mm
3	**19701**	1032101	✓		✓				✓			
4	**19702**	1046444	✓		✓	✓			✓			
5	**19701/1**	1032102	✓		✓					✓		
6	**19702/1**	1046445	✓			✓				✓		
7	**19608HPS**	1004018	✓		✓	✓			✓	✓		238 mm
8	**33670**	1102771	✓		✓	✓			✓	✓		
9	**19722**	6790700	✓		✓	✓			✓	✓		
10	**19722/2**		✓		✓	✓			✓	✓		**1 + 9**
11	**95760**		✓		✓	✓			✓	✓		MS

FORD KA 02/09→

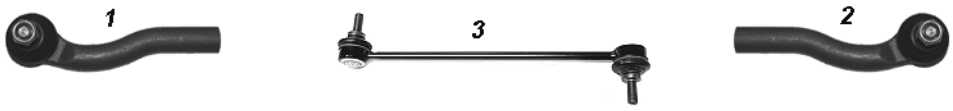

NR	MAPCO	REF									NEW	INFO
1	**49057**	1546259	✓		✓				✓	✓	✓	
2	**49058**	1546260	✓			✓			✓	✓	✓	
3	**19028HPS**	1580517	✓		✓	✓			✓	✓		

FORD MAVERICK 02/93→04/98

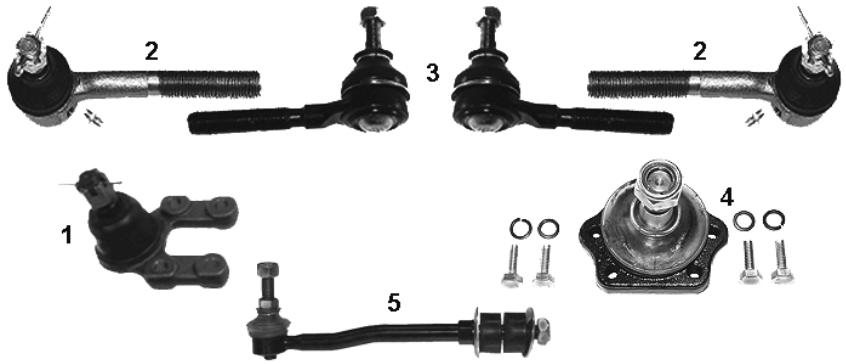

NR	MAPCO	REF									NEW	INFO
1	**59520**	1954431	✓		✓	✓		✓	✓	✓		
2	**19534**	1961668	✓		✓	✓			✓	✓		13,4mm aussen / outside M16x1.5 RHT
3	**19533**	1961669	✓		✓	✓			✓	✓		13,4mm Innen / inner M16x1.5 LHT
4	**19535**	1954430	✓		✓	✓	✓		✓	✓		
5	**49227HPS**	1954821		✓	✓	✓			✓	✓		

FORD MONDEO I 01/93→08/96

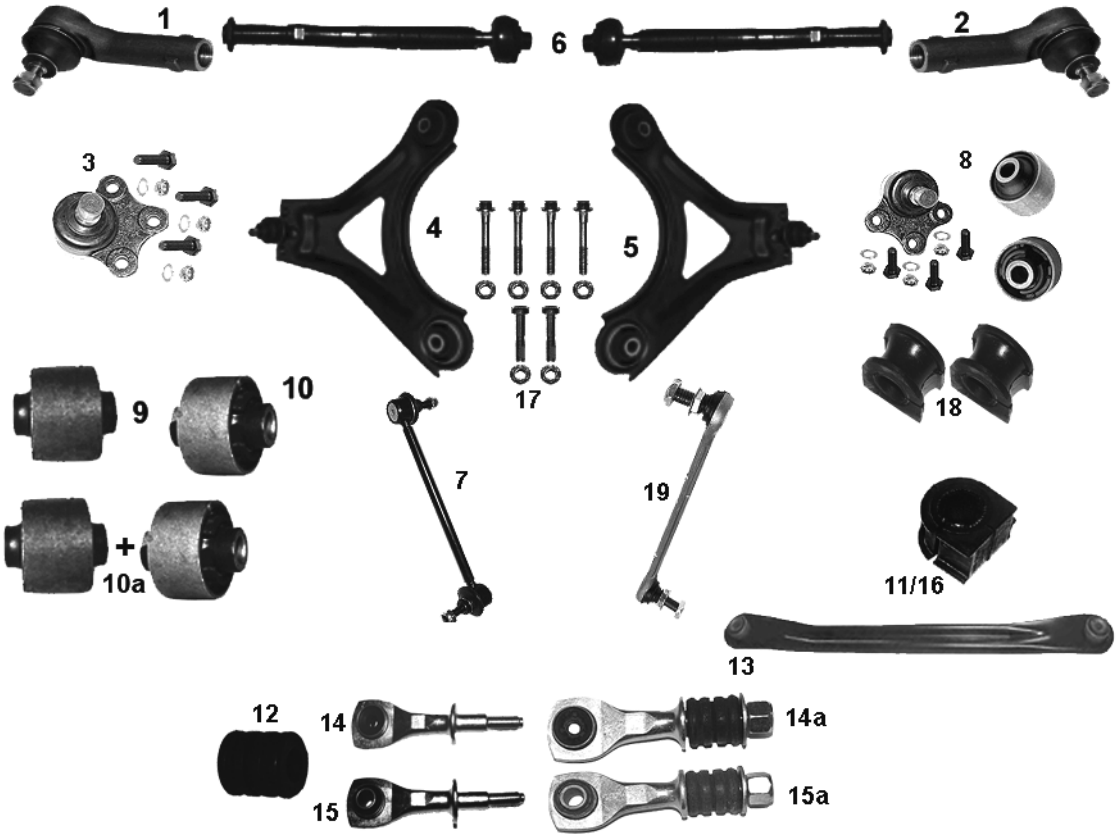

NR	MAPCO	REF			←	→	↑	↓			NEW	INFO
1	**19757**	5027451	✓		✓				✓	✓		M16x1,5RHT
2	**19758**	5027452	✓			✓			✓	✓		M16x1,5RHT
3	**19759**	93BB3395AC	✓		✓	✓			✓	✓		
4	**19768**	6954471	✓		✓				✓	✓		
5	**19769**	6954470	✓			✓			✓	✓		
6	**19647**	6737692	✓		✓	✓			✓	✓		M16x1,5RHT 14”-Rad / Wheel
7	**19605HPS**	6960036	✓		✓	✓			✓	✓		237mm
8	**19259**		✓		✓	✓			✓	✓		Kit
9	**33616**	6790115	✓		✓	✓			✓	✓		
10	**33617**	6870549	✓		✓	✓			✓	✓		
10a	**33616/7**		✓		✓	✓			✓	✓		Kit 33616 + 33617
11	**33631**	7144204		✓	✓	✓			✓	✓		
12	**33634**	6915411		✓	✓	✓			✓	✓		
13	**19658**	6867577		✓	✓	✓			✓	✓		
14	**33633**	7014210		✓	✓	✓			✓	✓		01/93→10/94
14a	**33633/1**	7014210		✓	✓	✓			✓	✓		01/93→10/94
15	**33632**	1054209		✓	✓	✓			✓	✓		11/94→ 08/96
15a	**33632/1**	1054209		✓	✓	✓			✓	✓		11/94→ 08/96
16	**33630**	7144202		✓	✓	✓			✓	✓		
17	**95768**		✓		✓	✓			✓	✓		MS
18	**33629/2**	6714194	✓		✓	✓			✓	✓		**innen/innerØ 19mm**
19	**19601**	1106269	✓		✓	✓			✓	✓		238,0 mm Aluminium

FORD MONDEO II 09/96→11/00

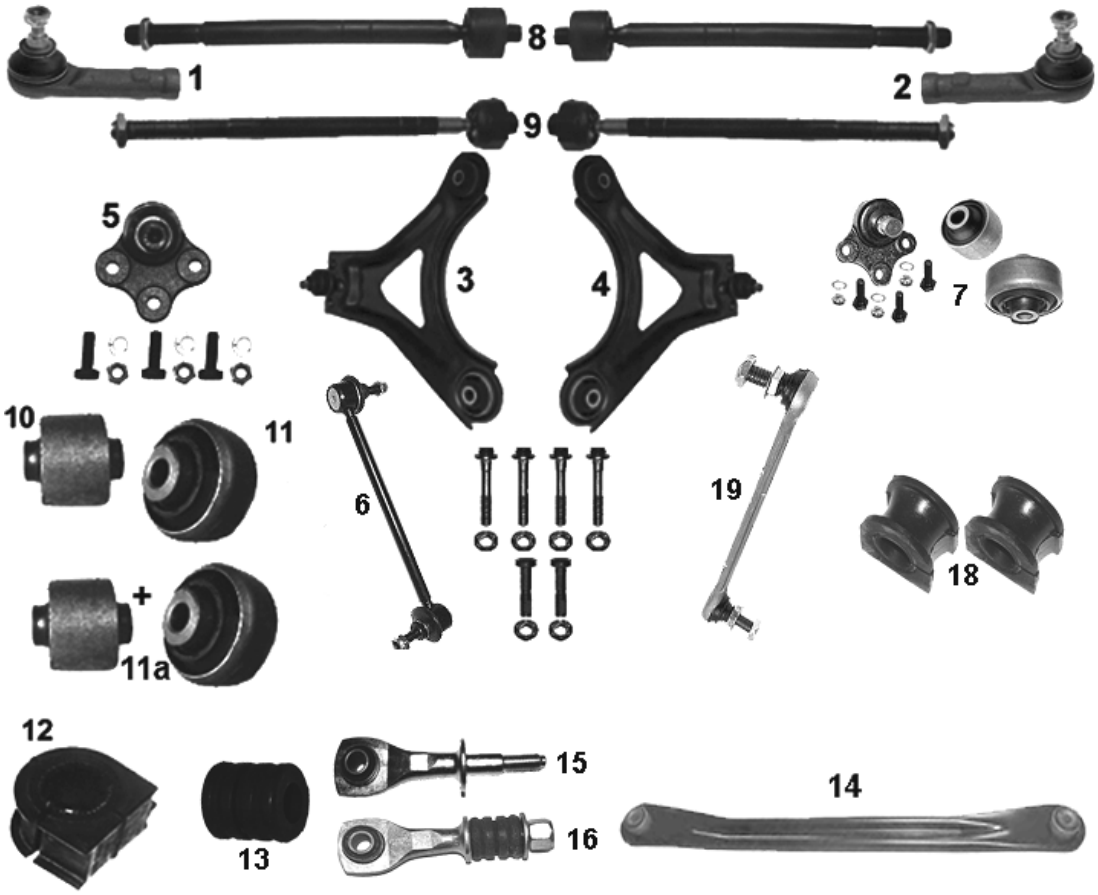

NR	MAPCO	REF								NEW	INFO
1	**49640**	1035691	✓		✓				✓	✓		M16x1,5RHT
2	**49641**	1035690	✓			✓			✓	✓		M16x1,5RHT
3	**19768**	1102949	✓		✓				✓	✓		→2000
4	**19769**	1102948	✓			✓			✓	✓		→2000
5	**19759**	93BB3395AC	✓		✓	✓			✓	✓		
6	**19605HPS**	6960036	✓		✓	✓			✓	✓		238,0 mm Stahl / steel
7	**19260**		✓		✓	✓			✓	✓		Kit
8	**49642**	3903147	✓		✓	✓			✓	✓		14”-Rad / Wheel
9	**49643**	3903149	✓		✓	✓			✓	✓		15”/16”-Rad / Wheel
10	**33616**	6790115	✓		✓	✓			✓	✓		
11	**33618**	1023058	✓		✓	✓			✓	✓		
11a	**33616/8**		✓		✓	✓			✓	✓		Kit 33616 + 33618
12	**33630**	7144202		✓	✓	✓			✓	✓		
13	**33634**	6915411		✓	✓	✓			✓	✓		
14	**19658**	6867577		✓	✓	✓			✓	✓		STOP
15	**33632**	1054209		✓	✓	✓			✓	✓		→07/98
16	**33632/1**			✓	✓	✓			✓	✓		→07/98
17	**95768**		✓		✓	✓			✓	✓		MS
18	**33629/2**	6714194	✓		✓	✓			✓	✓		**innen/innerØ 19mm**
19	**19601**	1106269	✓		✓	✓			✓	✓		238,0 mm Aluminium

FORD MONDEO III

11/00→

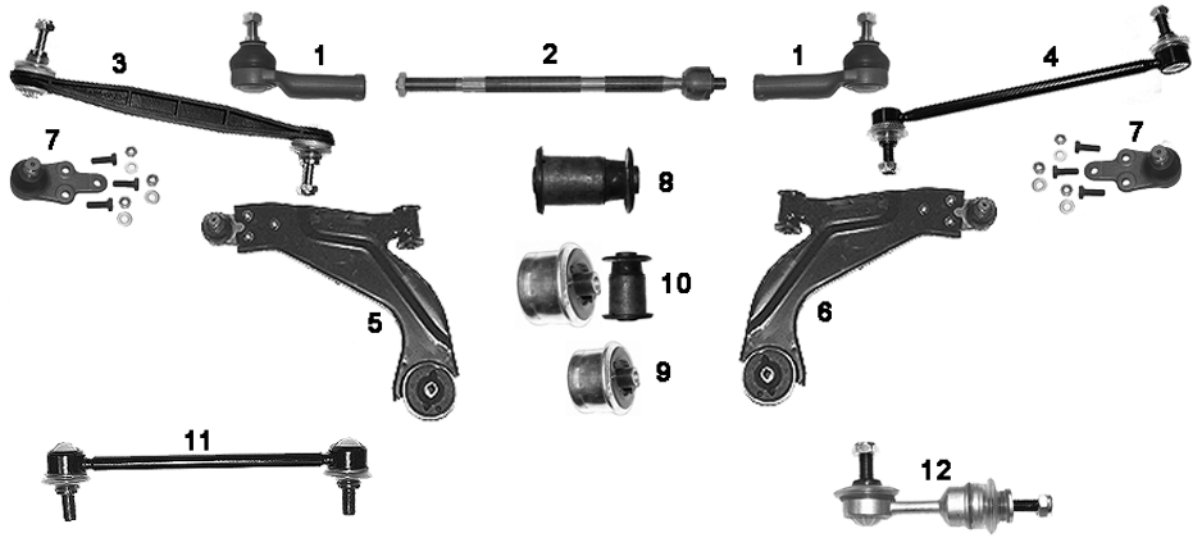

NR	MAPCO	REF			←	→	↑	↓			NEW	INFO
1	**59672**	1138313	✓		✓	✓			✓	✓		M16x1,5
2	**59666**	4111327	✓		✓	✓			✓	✓		M16x1,5RHT
3	**19777**	1219697	✓		✓	✓			✓	✓		250,0 mm Plastik
4	**19773HPS**	1127646	✓		✓	✓			✓	✓		250,0 mm Stahl/ Steel
5	**59644**	1116579	✓		✓				✓	✓		
6	**59645**	1116578	✓			✓			✓	✓		
7	**59673**	1S713395AE	✓		✓	✓		✓	✓	✓		
8	**33646**	1118476	✓		✓	✓			✓	✓		
9	**33647**	1311416	✓		✓	✓			✓	✓		
10	**33646/7**		✓		✓	✓			✓	✓		
11	**19775HPS**	1127648		✓	✓	✓			✓	✓		
12	**19776HPS**	1130452		✓	✓	✓			✓	✓		

Fortsetzung / continued (S.121)

FORD MONDEO III

Fortsetzung / continued (S.120) 11/00→



13



14



15



16



17



18



19



20

NR	MAPCO	REF									NEW	INFO
13	**51613**	1206474		✓	✓	✓			✓	✓	✓	575 mm
14	**51614**	1117859		✓	✓	✓			✓	✓	✓	hinten/ rear 550 mm
15	**51615**	1117857		✓	✓	✓			✓	✓	✓	vorn/ front 600 mm
16	**51616**	1230619		✓	✓	✓			✓	✓	✓	vorn/ front
17	**51617**	1214290		✓	✓	✓			✓	✓	✓	hinten/ rear
18	**51618**	1325326		✓	✓	✓	✓		✓	✓	✓	
19	**53614**			✓	✓	✓			✓	✓	✓	**axle Kit**
20	**53615**			✓	✓	✓			✓	✓	✓	**axle Kit**

FORD MONDEO IV 03/07→

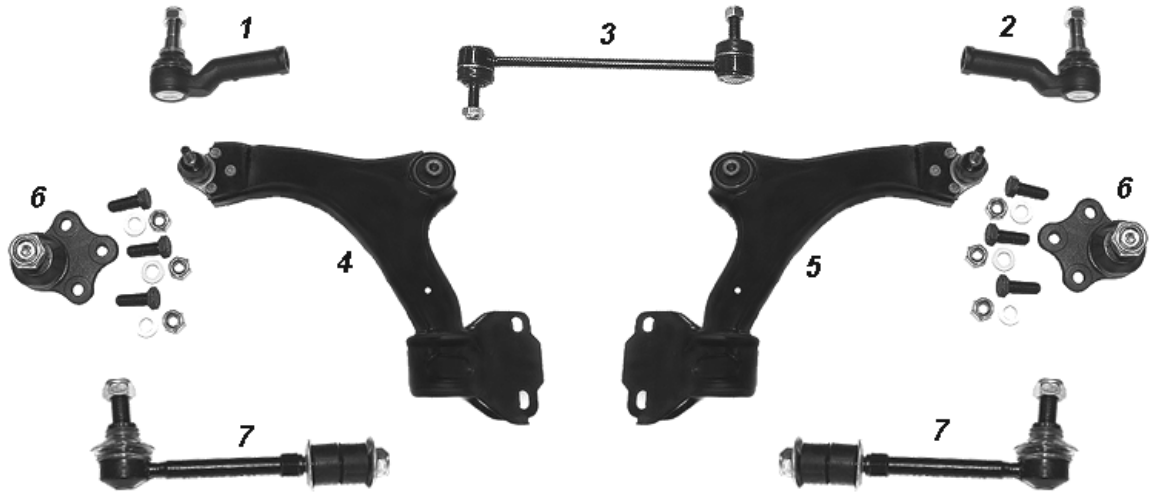

NR	MAPCO	REF			←	→	↑	↓			NEW	INFO
1	**51619**	1433274	✓ ✓		✓				✓	✓	✓	M18x1,5
2	**51620**	1433273	✓			✓			✓	✓	✓	M18x1,5
3	**51621**	1377849	✓		✓	✓			✓	✓	✓	
4	**51622**	1507182	✓		✓				✓	✓	✓	
5	**51623**	1507181	✓			✓			✓	✓	✓	
6	**51624**	No OE ref	✓		✓	✓			✓	✓	✓	
7	**51625**	1425853		✓	✓	✓			✓	✓	✓	

FORD PUMA (EC_) 03/97→

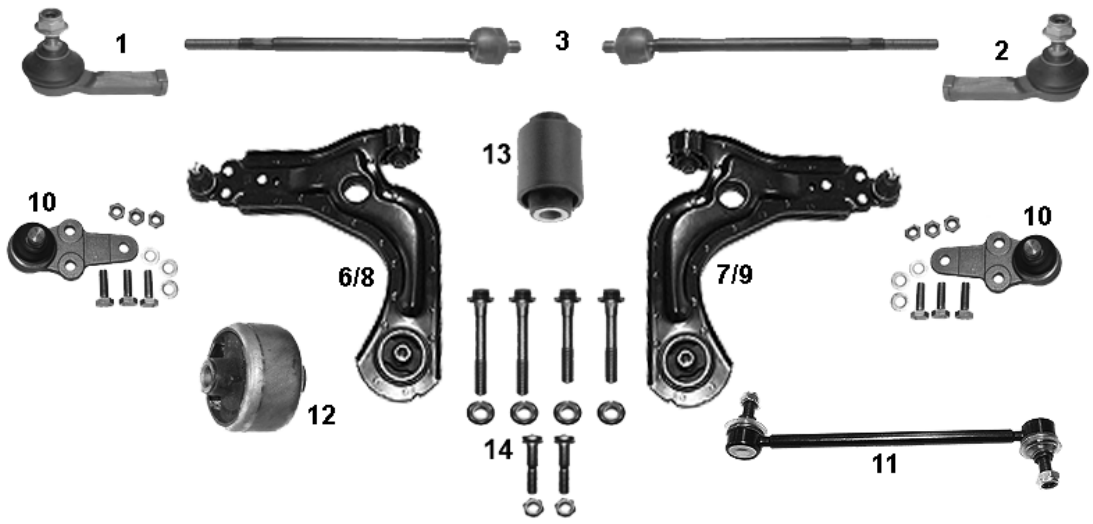

NR	MAPCO	REF								NEW	INFO
1	**19640**	1011858	✓		✓				✓	✓		M16x1,5RHT
2	**19641**	1011857	✓			✓			✓	✓		M16x1,5RHT
3	**19644**	1044014	✓		✓	✓			✓	✓		213 mm
4	**19644/1**		✓		✓				✓	✓		**3+1**
5	**19644/2**		✓			✓			✓	✓		**3+2**
6	**19642**	1020220	✓		✓	✓				✓		
7	**19643**	1020214	✓			✓				✓		
8	**19642/1**	1021220	✓			✓			✓			
9	**19643/1**	1021219	✓		✓	✓			✓			
10	**19763**	5021410	✓		✓	✓			✓	✓		16,5 mm
11	**19608HPS**	1004018	✓		✓	✓			✓	✓		238 mm
12	**33635**	1063372	✓		✓	✓			✓	✓		
13	**33636**	1055191	✓		✓	✓			✓	✓		
14	**95642**		✓		✓	✓			✓	✓		MS

FORD SCORPIO I 04/85→12/94



NR	MAPCO	REF								NEW	INFO
1	**19745**	6160988	✓		✓	✓			✓	✓		STOP 4WD, M14x2RHT
2	**19735**	6120232	✓		✓				✓	✓		✓ 4WD, M14x2RHT
3	**19736**	6120231	✓			✓			✓	✓		✓ 4WD
4	**19746/1**	6154290	✓		✓				✓	✓		
5	**19747/1**	6154289	✓			✓			✓	✓		
6	**19655**	6132991	✓		✓	✓			✓	✓		
7	**33627**	1656752	✓		✓	✓			✓	✓		
8	**33645**	6141919		✓	✓	✓			✓	✓		
9	**33677**	6192705	✓		✓	✓		✓	✓	✓		

FORD SCORPIO II 10/94→08/98

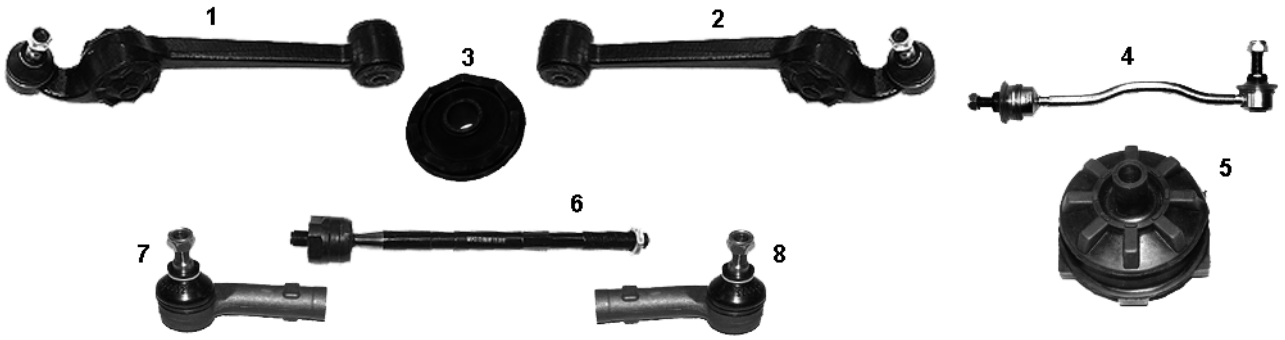

NR	MAPCO	REF								NEW	INFO
1	**19746/1**	6154290	✓		✓				✓	✓		→12/94
2	**19747/1**	6154289	✓			✓			✓	✓		→12/94
3	**33627**	1656752	✓		✓	✓			✓	✓		
4	**19659HPS**	1045413	✓		✓	✓			✓	✓		
5	**33645**	6141919		✓	✓	✓			✓	✓		
6	**19762**	7292960	✓		✓	✓			✓	✓		305 mm M16x1,5RHT
7	**59665**	5030222	✓		✓				✓	✓		M16x1,5RHT
8	**59657**	5030221	✓			✓			✓	✓		M16x1,5RHT

FORD SIERRA 1982→02/93

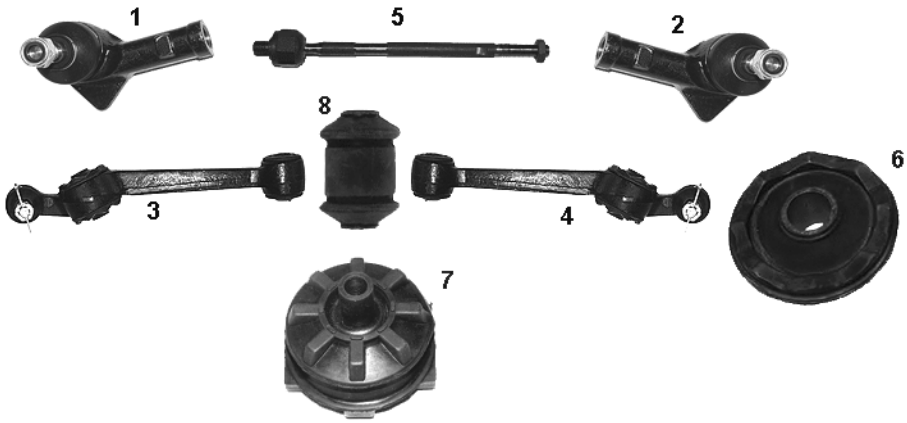

NR	MAPCO	REF								NEW	INFO
1	**19735**	6120232	✓		✓				✓	✓		M14x2,0RHT
2	**19736**	6120231	✓			✓			✓	✓		M14x2,0RHT
3	**19737/1**	6114617	✓		✓				✓	✓		
4	**19738/1**	6114616	✓			✓			✓	✓		
5	**19654**	6185336	✓		✓	✓			✓			**ZF 5019429 / 5023570**
6	**33627**	1656752	✓		✓	✓			✓	✓		
7	**33645**	6141919		✓	✓	✓			✓	✓		
8	**33677**	6192705	✓		✓	✓		✓	✓	✓		

FORD S-MAX 05/06→

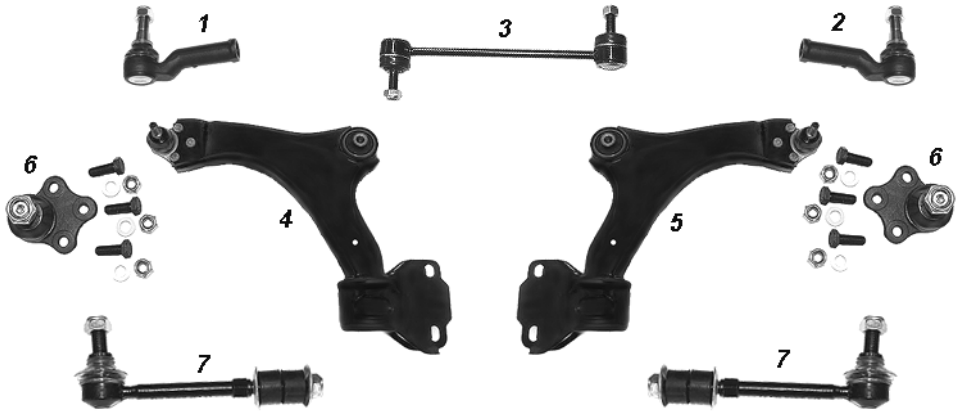

NR	MAPCO	REF								NEW	INFO
1	**51619**	1433274	✓		✓				✓	✓	✓	M18x1,5
2	**51620**	1433273	✓			✓			✓	✓	✓	M18x1,5
3	**51621**	1377849	✓		✓	✓			✓	✓	✓	
4	**51622**	1507182	✓		✓				✓	✓	✓	
5	**51623**	1507181	✓			✓			✓	✓	✓	
6	**51624**	No OE ref	✓		✓	✓			✓	✓	✓	
7	**51625**	1425853		✓	✓	✓			✓	✓	✓	

FORD TOURNEO CONNECT 06/02→



NR	MAPCO	REF								NEW	INFO
1	**59676**	4381840	✓		✓	✓			✓	✓	
2	**59674**	4366974	✓		✓			✓	✓	✓	
3	**59675**	4366973	✓			✓		✓	✓	✓	
4	**51600HPS**	1332453	✓		✓	✓			✓	✓	✓ 238,0mm
5	**51601**	1332463		✓	✓	✓			✓	✓	✓ 133,0mm

FORD TRANSIT (7__ _) 11/65→10/86

NR	MAPCO	REF								NEW	INFO
1	**59658**	1796515	✓			✓			✓	✓	M18x1,5RHT  1

FORD TRANSIT 10/85→ 03/00

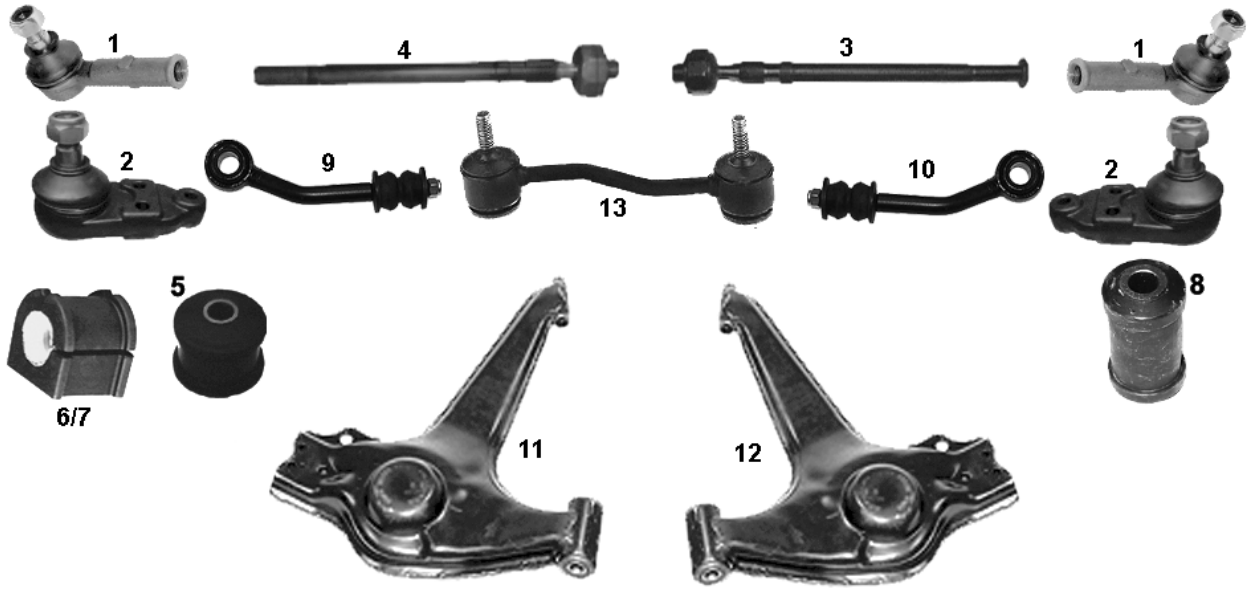

NR	MAPCO	REF									NEW	INFO
1	**19748**	6172643	✓		✓	✓				✓		→09/92 M16x1,5RHT
1	**19750**	6687191	✓		✓	✓				✓		09/91→ M16x1,5RHT
2	**19749**	6154161	✓		✓	✓				✓		85→08/91
2	**19751**	6650261	✓		✓	✓				✓		09/91→ M20x1,5
3	**19740**	6156463	✓		✓	✓				✓		→12/91
4	**49644**	6869951	✓		✓	✓				✓		01/92→
5	**33672**	6608818	✓		✓	✓				✓		1992→ 03/00
6	**33673**	6521811	✓		✓	✓				✓		**innen/innerØ 18mm** 1991→ 1994
7	**33674**	6521812	✓		✓	✓				✓		**innen/innerØ 20mm** 1994→ 03/00
8	**33675**	6517356	✓		✓	✓				✓		**innen/innerØ 16mm** 1991→ 03/00
9	**19780**	6150970	✓			✓				✓		
10	**19781**	6150971	✓		✓					✓		
11	**59654**	6608832	✓		✓					✓		1992→ 03/00
12	**59655**	6608830	✓			✓				✓		1992→ 03/00
13	**59667**	6168182	✓		✓	✓				✓		180,0 mm (T_ _) 85→09/92

FORD TRANSIT 08/87→ 03/00

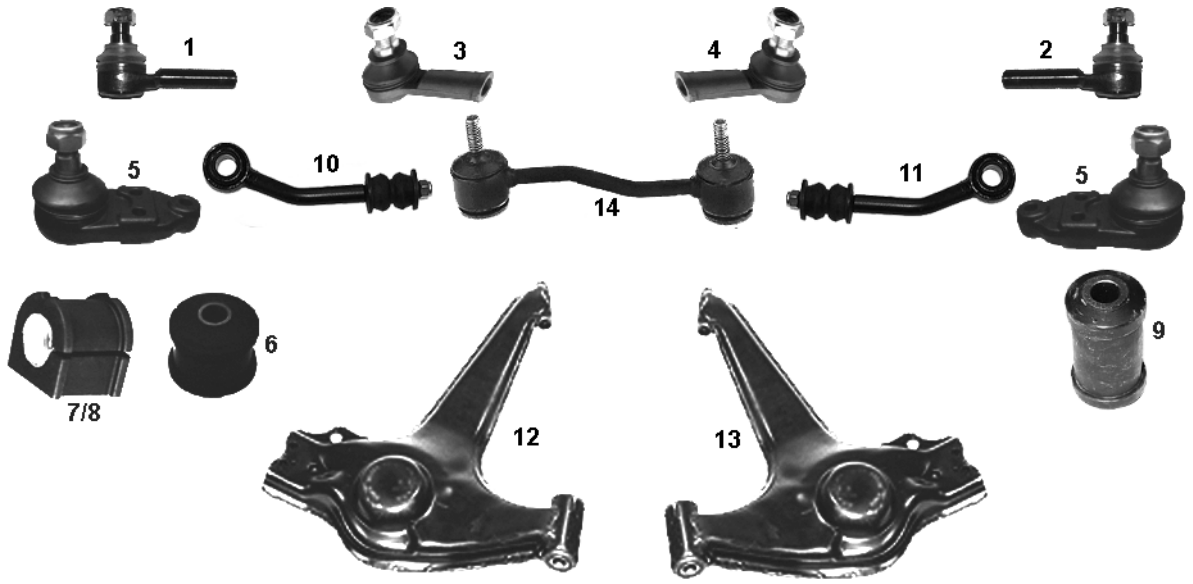

NR	MAPCO	REF			←	→	↑	↓		NEW	INFO
1	**19741**	5021447	✓		✓				✓			10/92→ M20x1,5 LHT
2	**19742**	5021446	✓			✓			✓			10/92→ M20x1,5 RHT
3	**49645**	5025557	✓		✓				✓			→ 09/92 M16x1,5 LHT
4	**49646**	5025558	✓			✓			✓			→ 09/92 M16x1,5 RHT
5	**19749**	5021430	✓		✓	✓			✓			
6	**33672**	6608818	✓		✓	✓			✓			1991→ 03/00
7	**33673**	6521811	✓		✓	✓			✓			**innen/innerØ 18mm** 1991→ 1994
8	**33674**	6521812	✓		✓	✓			✓			**innen/innerØ 20mm** 1994→ 03/00
9	**33675**	6517356	✓		✓	✓			✓			**innen/innerØ 16mm** 1991→ 03/00
10	**19780**	6150970	✓			✓			✓			
11	**19781**	6150971	✓		✓				✓			
12	**59654**	6608832	✓		✓				✓			1992→ 03/00
13	**59655**	6608830	✓			✓			✓			1992→ 03/00
14	**59667**	6168182	✓		✓	✓			✓			180,0 mm (T_ _) 85→09/92

FORD TRANSIT (F_ _) 01/00→

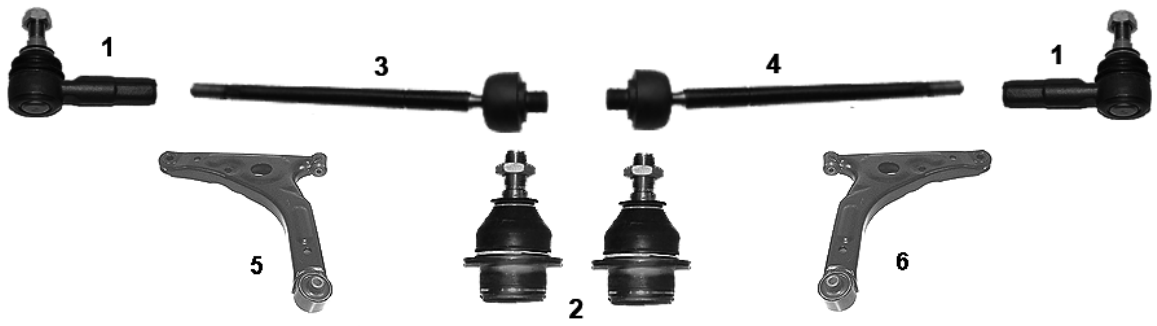

NR	MAPCO	REF									NEW	INFO
1	**59640**	1138275	✓		✓	✓			✓			M16x1,5 RHT
2	**59643**	4173761	✓		✓	✓			✓	✓		
3	**59641**	4059923	✓		✓				✓	✓		M16x1,5 RHT
4	**59642**	4059924	✓			✓			✓	✓		M16x1,5 RHT
5	**59661**	4540775	✓		✓				✓	✓		
6	**59662**	4540774	✓			✓			✓	✓		

FORD TRANSIT CONNECT 06/02→



NR	MAPCO	REF									NEW	INFO
1	**59676**	4381840	✓		✓	✓			✓	✓		
2	**59674**	4366974	✓		✓			✓	✓	✓		
3	**59675**	4366973	✓			✓		✓	✓	✓		
4	**51600HPS**	1332453	✓		✓	✓			✓	✓	✓	238,0mm
5	**51601**	1332463		✓	✓	✓			✓	✓	✓	133,0mm

FORD USA

FORD PROBE II (EPC) 10/93→03/98

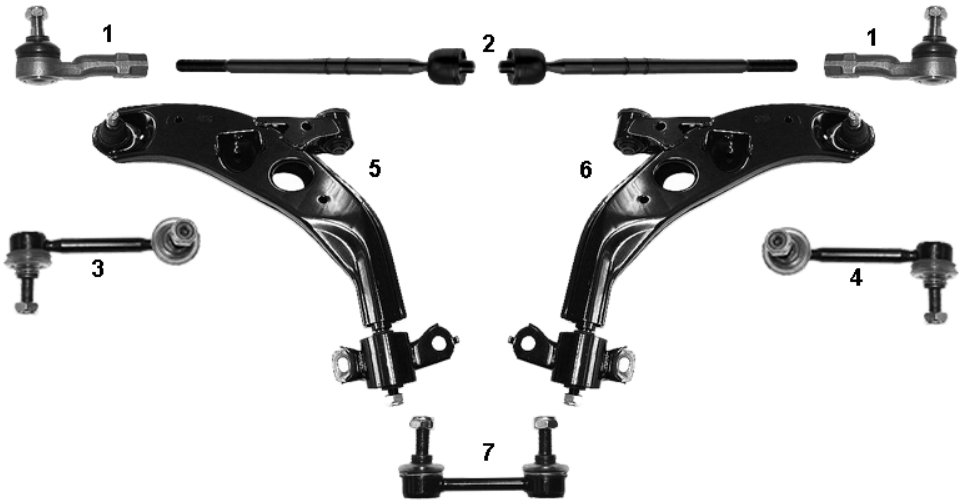

NR	MAPCO	REF									NEW	INFO
1	**19589**	3405915	✓		✓	✓			✓	✓		M14x1,5RHT
2	**19599**	3405940	✓		✓	✓			✓	✓		M14x1,5RHT
3	**19590HPS**	3410592	✓		✓				✓	✓		
4	**19591HPS**	3410591	✓			✓			✓	✓		
5	**49582**	3703255	✓		✓			✓	✓	✓		
6	**49583**	3707090	✓			✓		✓	✓	✓		
7	**19592HPS**	3799085		✓	✓	✓			✓	✓		

HONDA

HONDA ACCORD IV 1.6, 1.8, 1.9i, 2.0 — 01/92→10/98
HONDA ACCORD IV 2.0i 16V — 01/92→02/93

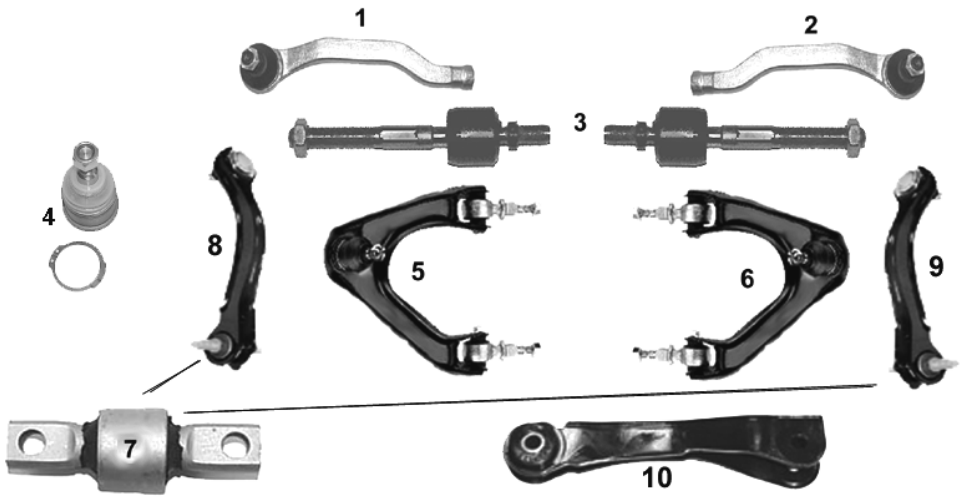

NR	MAPCO	REF			←	→	↑	↓			NEW	INFO
1	**19504**	53560-SM4-004	✓		✓				✓	✓		M14x1,5 RHT
2	**19505**	53540-SM4-004	✓			✓			✓	✓		M14x1,5 RHT
3	**19506**	53521-SM4-013	✓		✓	✓			✓	✓		
4	**19507**	51220-SM4-013	✓		✓	✓		✓	✓	✓		M12X1,25
5	**49506**	51460-SM4-023	✓		✓		✓		✓	✓		STOP **2.0i 16V**
6	**49507**	51450-SM4-023	✓			✓	✓		✓	✓		STOP **2.0i 16V**
7	**33523**	52393-SM4-004		✓	✓	✓	✓		✓	✓		✓ **2.0i 16V**
8	**49203**	52400-SM4-033		✓	✓		✓		✓	✓		✓ **2.0i 16V**
9	**49204**	52390-SM1-A03		✓		✓	✓		✓	✓		✓ **2.0i 16V**
10	**49267**	52306-SE0-030		✓	✓	✓			✓	✓		

HONDA ACCORD V Aerodeck 2.0 iLS 16V — 09/93→02/98
HONDA ACCORD V Aerodeck 2.2 iES — 09/93→02/99

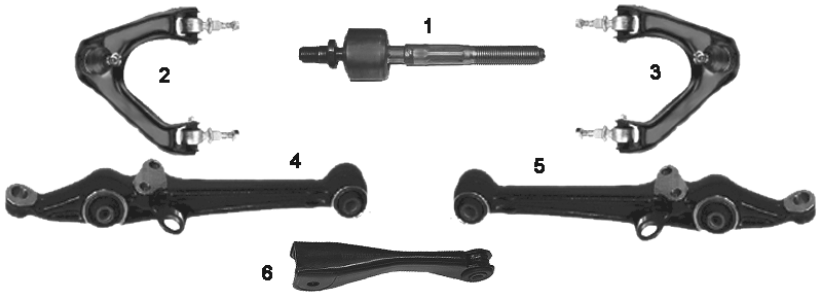

NR	MAPCO	REF			←	→	↑	↓			NEW	INFO
1	**59246**	53010-SV4-000	✓		✓	✓			✓	✓		M14x1,5 RHT 135 mm
2	**49205**	51460-SV5-000	✓		✓		✓		✓	✓		
3	**49206**	51450-SV4-000	✓			✓	✓		✓	✓		
4	**49209**	51365-SV4-000	✓		✓			✓	✓	✓		
5	**49210**	51355-SV4-000	✓			✓		✓	✓	✓		
6	**49267**	52306-SE0-030		✓	✓	✓			✓	✓		

HONDA ACCORD VI 1.8 - 2.0i_ - 2.2i VTEC, 2.0TDi 1994→10/98

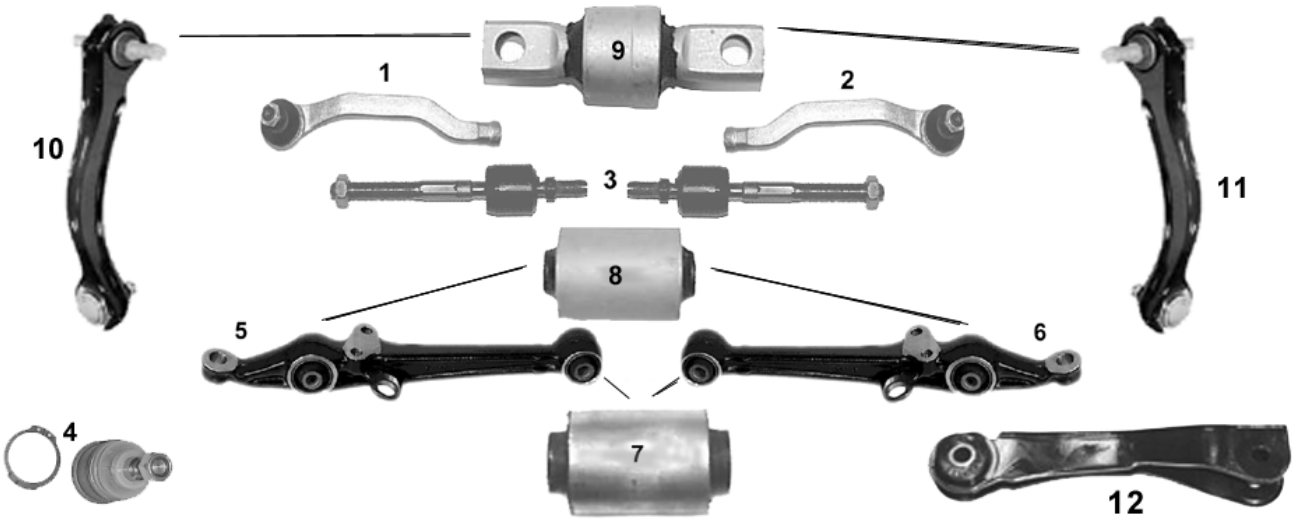

NR	MAPCO	REF								NEW	INFO
1	**19504**	53560-SM4-004	✓		✓				✓	✓		M14x1,5 RHT
2	**19505**	53540-SM4-004	✓			✓			✓	✓		M14x1,5 RHT
3	**19506**	53521-SM4-013	✓		✓	✓			✓	✓		
4	**19507**	51220-SM4-013	✓		✓	✓		✓	✓	✓		M12X1,25
5	**49508**	51365-SM4-040	✓		✓			✓	✓	✓		
6	**49509**	51355-SM4-040	✓			✓		✓	✓	✓		
7	**33222**	51393-SV1-A01	✓		✓	✓		✓	✓	✓		
8	**33522**	51393-SE0-003	✓		✓	✓		✓	✓	✓		
9	**33523**	52393-SM4-004		✓	✓	✓	✓		✓	✓		
10	**49203**	52400-SM4-033		✓	✓		✓		✓	✓		
11	**49204**	52390-SM1-A03		✓		✓	✓		✓	✓		
12	**49267**	52306-SE0-030		✓	✓	✓			✓	✓		

HONDA ACCORD VII (CG) 10/98→

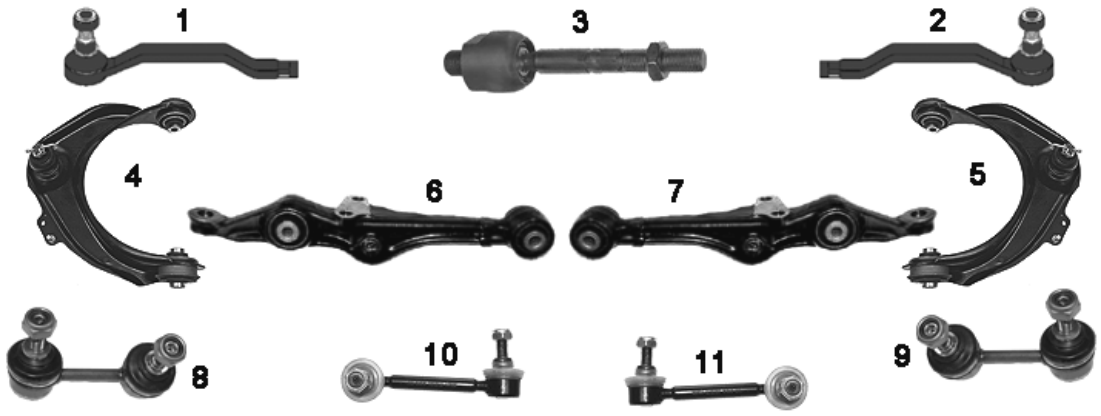

NR	MAPCO	REF								NEW	INFO
1	**49264**	53560-S1A-E01	✓		✓				✓	✓		M14x1,5RHT
2	**49265**	53540-S1A-E01	✓			✓			✓	✓		M14x1,5RHT
3	**59514**	53010-S84-A01	✓		✓	✓			✓	✓		
4	**49211**	51460-S84-A01	✓		✓		✓		✓	✓		
5	**49212**	51450-S84-A01	✓			✓	✓		✓	✓		
6	**49213**	51365-S84-A00	✓		✓			✓	✓	✓		
7	**49214**	51355-S84-A00	✓			✓		✓	✓	✓		
8	**59500**	51320-S84-A01	✓		✓				✓	✓		
9	**59501**	51321-S84-A01	✓			✓			✓	✓		
10	**59503HPS**	52325-S84-A01		✓	✓				✓	✓		
11	**59502HPS**	52320-S84-A01		✓		✓			✓	✓		

HONDA ACCORD VIII (CL) 02/03→

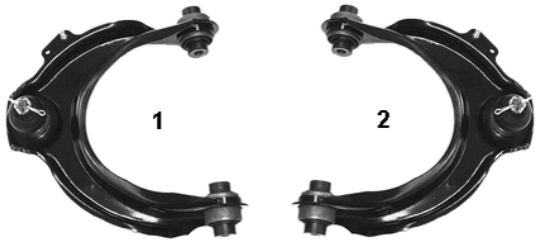

NR	MAPCO	REF								NEW	INFO
1	**51500**	51460-SDA-A01	✓		✓		✓		✓	✓		
2	**51501**	51450-SDA-A01	✓			✓	✓		✓	✓		

HONDA CIVIC II 10/83→10/87



NR	MAPCO	REF			←	→	↑	↓			NEW	INFO
1	**59330**	51361-SB2-013	✓		✓			✓	✓	✓		
2	**59331**	51351-SB2-013	✓			✓		✓	✓	✓		
3	**59319**	53540-611-020	✓		✓	✓			✓	✓		M12x1,25 RHT

HONDA CIVIC III (ED) 10/87→1991

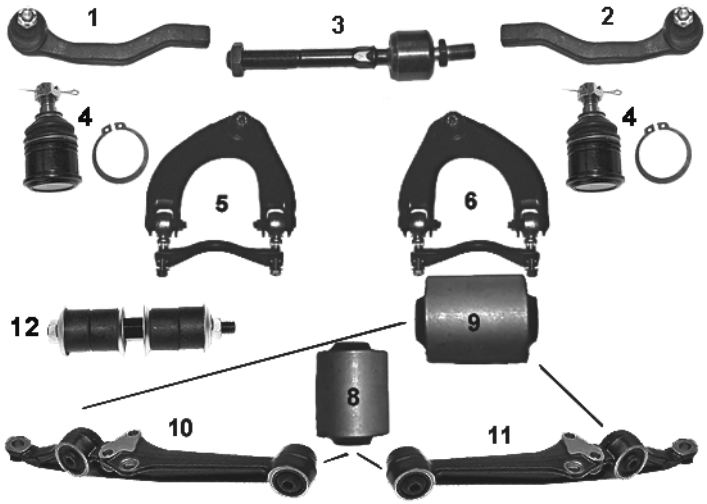

NR	MAPCO	REF			←	→	↑	↓			NEW	INFO
1	**19500**	53560-SH3-013	✓		✓				✓	✓		**M14x1,5RHT**
2	**19501**	53540-SH3-013	✓			✓			✓	✓		**M14x1,5RHT**
3	**19502**	53521-SH3-003	✓		✓	✓			✓	✓		**M14x1,5 / M12x1,5**
4	**19503**	51220-SH3-003	✓		✓	✓		✓	✓	✓		M12X1,25
5	**49511**	51460-SH3-023	✓		✓		✓		✓	✓		
6	**49512**	51450-SH3-023	✓			✓	✓		✓	✓		
8	**33521**	51810-SH3-004	✓		✓	✓		✓	✓	✓		
9	**33221**	51810-SV4-003	✓		✓	✓		✓	✓	✓		
10	**59506**	51365-SH3-020	✓		✓			✓	✓	✓		
11	**59507**	51355-SH3-020	✓			✓		✓	✓	✓		
12	**49517**	90112-SE0-000	✓		✓	✓			✓	✓		

HONDA CIVIC IV (EG,EH,EJ) 1.3 - 1.5Lsi - 1.5VEi
HONDA CIVIC IV (EG,EH,EJ) 1.6 Esi - 1.6VTi

10/91→11/95

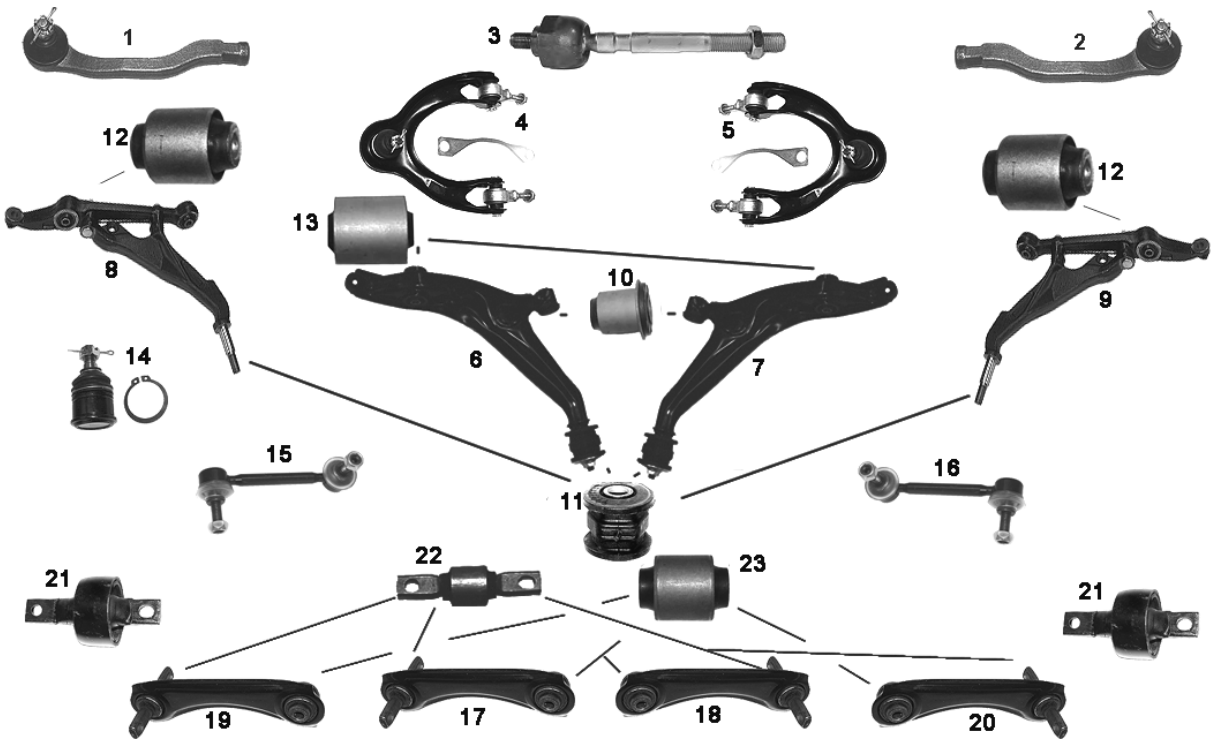

NR	MAPCO	REF			←	→	↑	↓			NEW	INFO
1	**19508**	53560-SR3-003	✓		✓				✓	✓		**M14x1,5RHT**
2	**19509**	53540-SR3-003	✓			✓			✓	✓		**M14x1,5RHT**
3	**59557**	53010-SR3-010	✓		✓	✓			✓	✓		**M14x1,5 / M12x1,5**
4	**49502**	51460-SR3-023	✓		✓		✓		✓	✓		
5	**49503**	51450-SR3-023	✓			✓	✓		✓	✓		
6	**49500**	51360-S04-G00	✓		✓			✓	✓	✓		✓**EJ** 1.5i
7	**49501**	51350-S04-G00	✓			✓		✓	✓	✓		✓**EJ** 1.5i
8	**49215**	51360-SR3-020	✓		✓			✓	✓	✓		✓**EG8,EH9,EG9**
9	**49216**	51350-SR3-020	✓			✓		✓	✓	✓		✓**EG8,EH9,EG9**
10	**33525**	52365-SH3-014	✓		✓	✓		✓	✓	✓		✓**EJ** 1.5i
11	**33526**	51395-SR3-N02	✓		✓	✓		✓	✓	✓		✓**EJ** 1.5i
12	**33527**	51392-SR3-024	✓		✓	✓		✓	✓	✓		✓**EJ** 1.5i
13	**33521**	51810-SH3-004	✓		✓	✓			✓	✓		
14	**49510**	51220-S04-003	✓		✓	✓		✓	✓	✓		
15	**49268HPS**	52320-S10-003		✓	✓				✓	✓		
16	**49269HPS**	52321-S10-003		✓		✓			✓	✓		
17	**49262**	52400-SR3-A00		✓	✓		✓		✓	✓		
18	**49263**	52390-SR3-A00		✓		✓	✓		✓	✓		
19	**49504**	52400-SR3-000		✓	✓				✓	✓		✓**EJ**
20	**49505**	52390-SR3-000		✓		✓			✓	✓		✓**EJ**
21	**33520**	52385-ST3-G01		✓	✓	✓			✓	✓		
22	**33523**	52393-SM4-003		✓	✓	✓			✓	✓		
23	**33524**	52390-SH3-000		✓	✓	✓			✓	✓		

HONDA CIVIC V (EJ9) 11/95→02/01

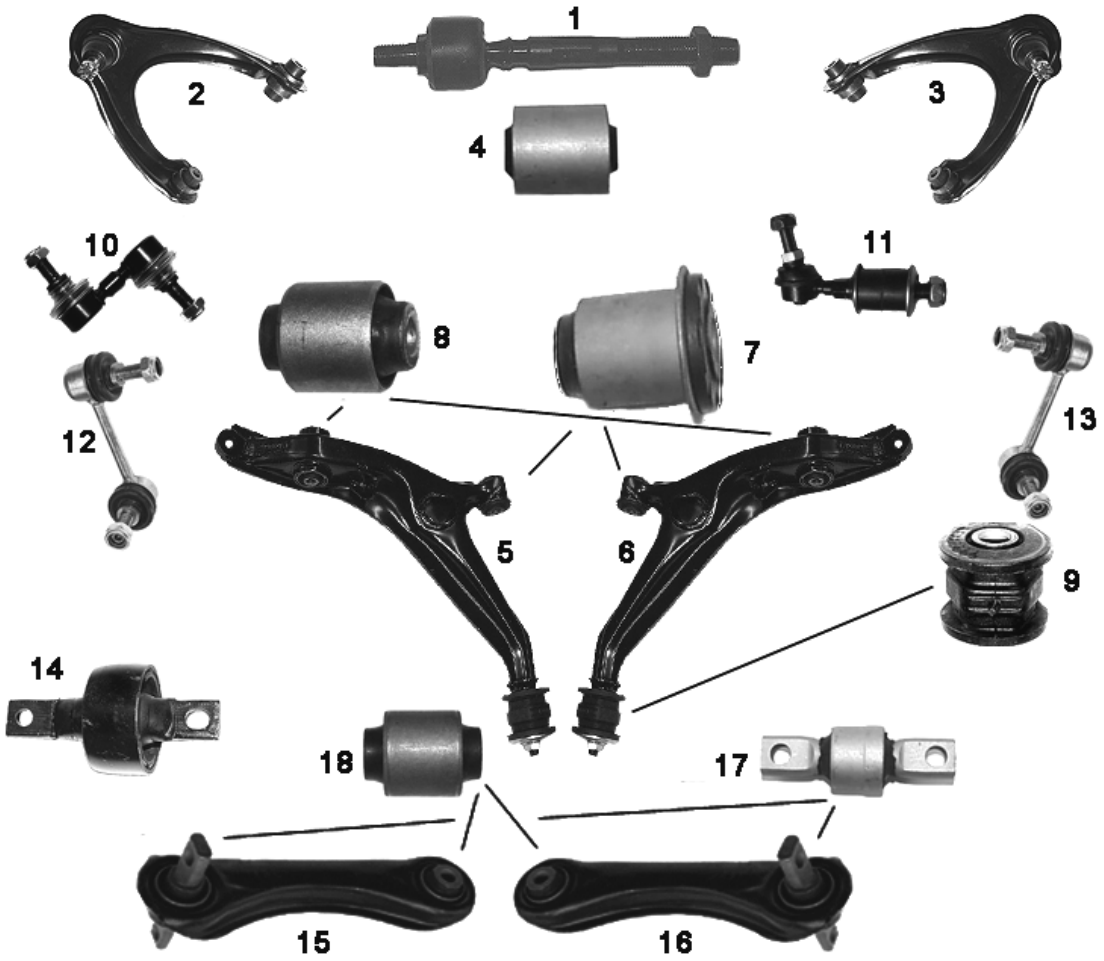

NR	MAPCO	REF								NEW	INFO
1	**59512**	53010-S04-000	✓		✓	✓			✓	✓		**M14x1,5 / M10x1,25**
2	**49513**	51460-S04-023	✓		✓		✓		✓	✓		✓CRX
3	**49514**	51450-S04-023	✓			✓	✓		✓	✓		✓CRX
4	**33521**	51810-SH3-004	✓		✓	✓			✓	✓		
5	**49500**	51360-S04-G00	✓		✓			✓	✓	✓		✓3-drs
6	**49501**	51350-S04-G00	✓			✓		✓	✓	✓		✓3-drs
7	**33525**	52365-SH3-014	✓		✓	✓		✓	✓	✓		
8	**33527**	51392-SR3-024	✓		✓	✓		✓	✓	✓		
9	**33526**	51396-SR3-N02	✓		✓	✓		✓	✓	✓		
10	**49200HPS**	51320-S04-003	✓		✓	✓			✓	✓		
11	**51505**	51320-ST7-003	✓		✓	✓			✓	✓		**M10x1,25**
12	**49202**	52320-S04-003		✓	✓				✓	✓		
13	**49201**	52230-S04-003		✓		✓			✓	✓		
14	**33520**	52385-ST3-G01		✓	✓	✓			✓	✓		
15	**49504**	52400-SR3-000		✓	✓				✓	✓		
16	**49505**	52390-SR3-000		✓		✓			✓	✓		
17	**33523**	52393-SM4-003		✓	✓	✓			✓	✓		
18	**33524**	52390-SH3-000		✓	✓	✓			✓	✓		

HONDA CIVIC VI 1.7 85KW 02/01→

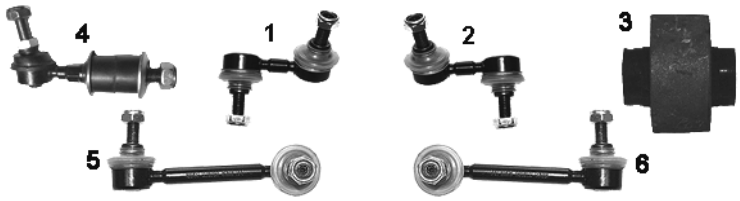

NR	MAPCO	REF								NEW	INFO
1	**59505HPS**	51321-S5A-003	✓		✓				✓	✓	
2	**59504HPS**	51320-S5A-003	✓			✓			✓	✓	
3	**33226**	51391-S5A-024	✓		✓	✓		✓	✓	✓	
4	**51505**	51320-ST7-003	✓		✓	✓			✓	✓	M10x1,25
5	**59241**	52321-S5A-013		✓	✓				✓	✓	
6	**59242**	52320-S5A-013		✓		✓			✓	✓	

HONDA CONCERTO 1.4-1.6i 16V 08/89→03/95

NR	MAPCO	REF								NEW	INFO
1	**49911**	GSV1170	✓		✓	✓			✓	✓	1 

HONDA CR-V I (RD) 10/95 → 2002

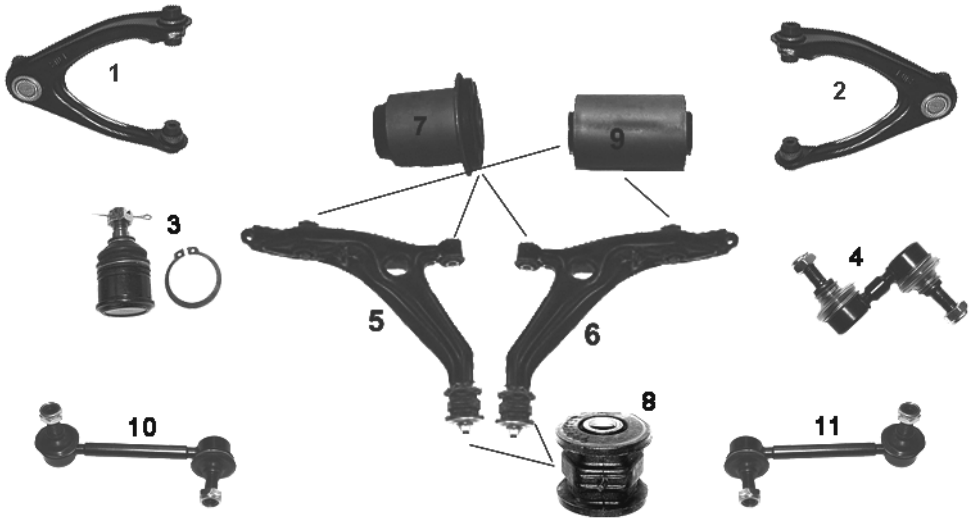

NR	MAPCO	REF								NEW	INFO
1	**49260**	51460-S10-020	✓		✓		✓		✓	✓	
2	**49261**	51450-S10-020	✓			✓	✓		✓	✓	
3	**19503**	51220-SH3-003	✓		✓	✓		✓	✓	✓	M12X1,25
4	**49200HPS**	51320-S04-003	✓		✓	✓			✓	✓	
5	**49217**	51360-S10-G00	✓		✓			✓	✓	✓	
6	**49218**	51350-S10-G00	✓			✓		✓	✓	✓	
7	**33525**	52365-SH3-014	✓		✓	✓		✓	✓	✓	
8	**33526**	51396-SR3-N02	✓		✓	✓		✓	✓	✓	
9	**33527**	51392-SR3-024	✓		✓	✓		✓	✓	✓	
10	**49269HPS**	52321-S10-003		✓	✓				✓	✓	
11	**49268HPS**	52320-S10-003		✓		✓			✓	✓	

HONDA CR-V II 07/02 →



NR	MAPCO	REF								NEW	INFO
1	**59513**	53010-S10-000	✓		✓	✓			✓	✓	
2	**51541HPS**	52321-S9A-003		✓	✓				✓	✓	
3	**51542HPS**	52320-S9A-003		✓		✓			✓	✓	

HONDA CRX I (AF, AS) 10/83→10/87



NR	MAPCO	REF									NEW	INFO
1	**59330**	51361-SB2-013	✓		✓			✓	✓	✓		
2	**59331**	51351-SB2-013	✓			✓		✓	✓	✓		
3	**59319**	53540-611-020	✓		✓	✓			✓	✓		M12x1,25 RHT

HONDA CRX II (ED, EE) 1988→1991

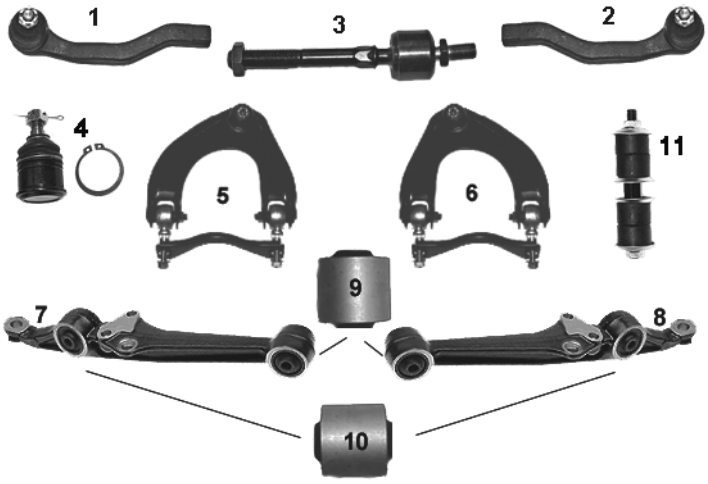

NR	MAPCO	REF									NEW	INFO
1	**19500**	53560-SH3-013	✓		✓				✓	✓		**M14x1,5RHT**
2	**19501**	53540-SH3-013	✓			✓			✓	✓		**M14x1,5RHT**
3	**19502**	53521-SH3-003	✓		✓	✓			✓	✓		**M14x1,5 / M12x1,5**
4	**19503**	51220-SH3-003	✓		✓	✓		✓	✓	✓		M12X1,25
5	**49511**	51460-SH3-023	✓		✓		✓		✓	✓		
6	**49512**	51450-SH3-023	✓			✓	✓		✓	✓		
7	**59506**	51365-SH3-020	✓		✓			✓	✓	✓		
8	**59507**	51355-SH3-020	✓			✓		✓	✓	✓		
9	**33521**	51810-SH3-004	✓		✓	✓		✓	✓	✓		
10	**33221**	51810-SV4-003	✓		✓	✓		✓	✓	✓		
11	**49517**	90112-SE0-000	✓		✓	✓			✓	✓		

HONDA HR-V (GH) 03/99→

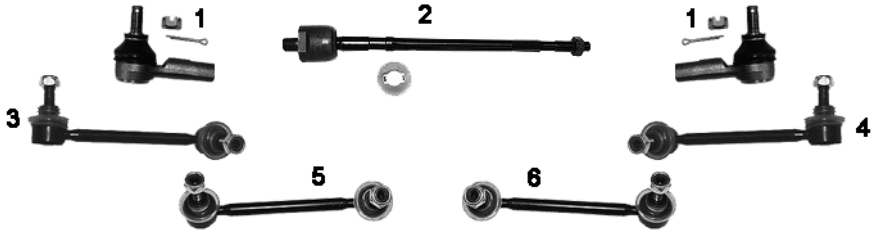

NR	MAPCO	REF								NEW	INFO
1	**59515**	53450-SX8-T01	✓		✓	✓			✓	✓		
2	**59558**	53010-S2H-J01	✓		✓	✓			✓	✓		
3	**59244**	51321-S2H-003	✓		✓				✓	✓		
4	**59243**	51320-S2H-003	✓			✓			✓	✓		
5	**51507HPS**	52321-S2H-003		✓	✓				✓	✓	✓	
6	**51508HPS**	52320-S2H-003		✓		✓			✓	✓	✓	

HONDA INTEGRA (DC2) 11/97→ 10/01

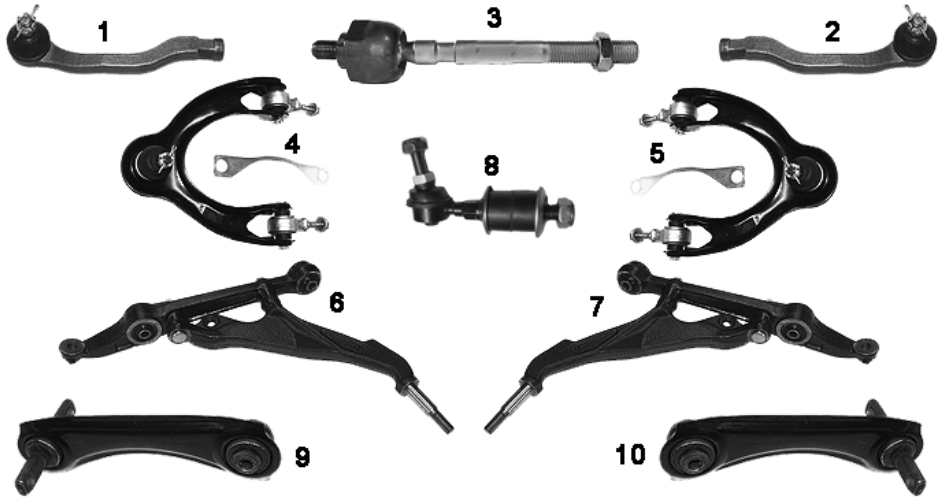

NR	MAPCO	REF								NEW	INFO
1	**19508**	53560-SR3-003	✓		✓				✓	✓		M14x1,5RHT
2	**19509**	53540-SR3-003	✓			✓			✓	✓		M14x1,5RHT
3	**59557**	53010-SR3-010	✓		✓	✓			✓	✓		**M14x1,5 / M12x1,5**
4	**49502**	51460-SR3-023	✓		✓		✓		✓	✓		
5	**49503**	51450-SR3-023	✓			✓	✓		✓	✓		
6	**49215**	51360-SR3-020	✓		✓			✓	✓	✓		
7	**49216**	51350-SR3-020	✓			✓		✓	✓	✓		
8	**51505**	51320-ST7-003	✓		✓	✓			✓	✓		M10x1,25
9	**49504**	52400-SR3-000		✓	✓				✓	✓		
10	**49505**	52390-SR3-000		✓		✓			✓	✓		

HONDA JAZZ 03/02→



NR	MAPCO	REF								NEW	INFO
1	**51502**	51360-SAA-E01	✓		✓			✓	✓	✓		
2	**51503**	51350-SAA-E01	✓			✓		✓	✓	✓		

HONDA LEGEND I 01/88→12/90

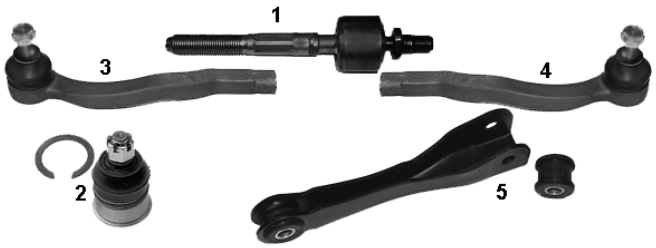

NR	MAPCO	REF								NEW	INFO
1	**59247**	53521-SD4-023	✓		✓	✓			✓	✓		M12x1,25 RHT, 125 mm
2	**59333**	51220-SD4-004	✓		✓	✓		✓	✓	✓		18mm
3	**59371**	53440-SD4-003	✓		✓				✓	✓		M12x1,25 RHT Konus 14,0 mm
4	**59372**	53540-SD4-003	✓			✓			✓	✓		M12x1,25 RHT Konus 14,0 mm
5	**51506**	52306-SE0-A00		✓	✓	✓			✓	✓		

HONDA LEGEND II 01/91→02/96



NR	MAPCO	REF								NEW	INFO
1	**59314**	53560-SP0-023	✓		✓				✓	✓		M14x1,5 RHT
2	**59249**	53540-SP0-025	✓			✓			✓	✓		M14x1,5 RHT

HONDA LEGEND III (KA9) 02/96→

NR	MAPCO	REF								NEW	INFO
1	**59333**	51220-SD4-004	✓		✓	✓		✓	✓	✓		18mm  1

HONDA LOGO 1.3 — 03/99 → 03/02

NR	MAPCO	REF								NEW	INFO
1	**59515**	53450-SX8-T01	✓		✓	✓			✓	✓	

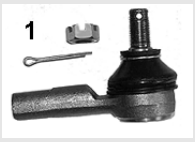

HONDA PRELUDE IV (BB) — 02/92 → 09/96

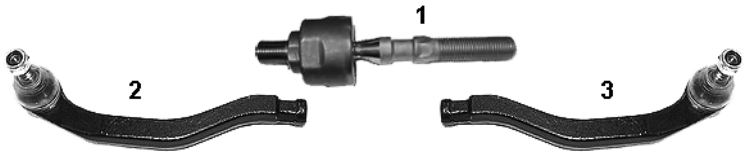

NR	MAPCO	REF								NEW	INFO
1	**59559**	53010-SS0-000	✓		✓	✓			✓	✓	
2	**59315**	53560-SS0-004	✓		✓				✓	✓	
3	**59311**	53540-SS0-004	✓			✓			✓	✓	

HONDA PRELUDE V (BB) 2.0 16V+2.2 16V — 10/96 → 10/00

NR	MAPCO	REF								NEW	INFO
1	**59245**	52320-S30-003		✓	✓	✓			✓	✓	



HONDA SHUTTLE (RA) — 10/94 → 05/01

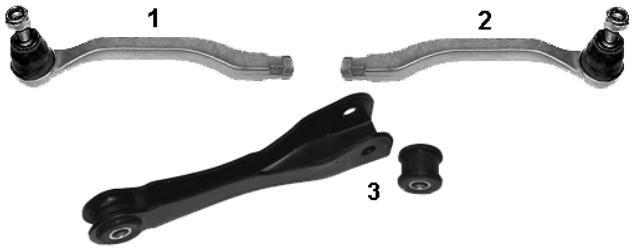

NR	MAPCO	REF								NEW	INFO
1	**59313**	53560-SV4-013	✓		✓				✓	✓	
2	**59312**	53540-SV4-013	✓			✓			✓	✓	
3	**51506**	52306-SE0-A00		✓	✓	✓			✓	✓	✓

HYUNDAI

HYUNDAI ACCENT (X-3) 10/94→01/01

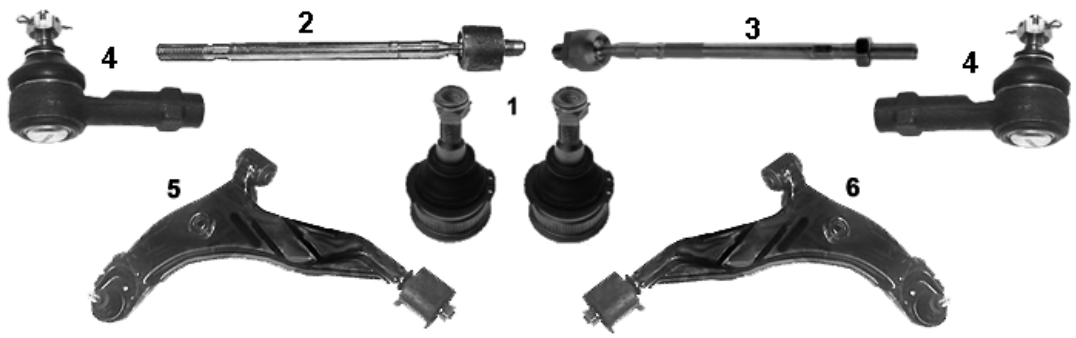

NR	MAPCO	REF								NEW	INFO
1	**49255**	54503-22A00	✓		✓	✓			✓	✓		
2	**59574**	56540-24001	✓		✓	✓				✓		
3	**59570**	57730-28500	✓		✓	✓			✓			321mm
4	**19512**	56820-28500	✓		✓	✓			✓	✓		M14x1,5RHT
5	**59292**	54500-22200	✓		✓				✓	✓		
6	**59291**	54501-22200	✓			✓			✓	✓		

HYUNDAI ACCENT (LC) 01/01→

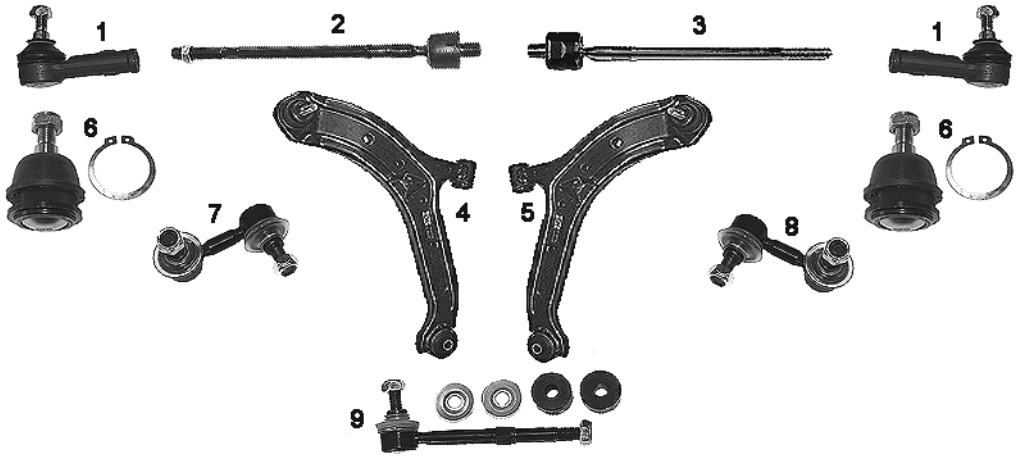

NR	MAPCO	REF								NEW	INFO
1	**59586**	56820-25000	✓		✓	✓			✓	✓		
2	**59571**	57755-25000	✓		✓	✓			✓			
3	**59572**	56540-25000	✓		✓	✓				✓		
4	**59376**	54500-25000	✓		✓				✓	✓		
5	**59377**	54501-25000	✓			✓			✓	✓		
6	**49255**	54503-22A00	✓		✓	✓			✓	✓		
7	**49250HPS**	54830-25010	✓		✓				✓	✓		
8	**49251HPS**	54830-25020	✓			✓			✓	✓		
9	**49252**	55830-25000		✓	✓	✓			✓	✓		

HYUNDAI AMICA 2000 →



NR	MAPCO	REF								NEW	INFO
1	**19540**	56820-28000	✓		✓	✓			✓	✓		M12x1,25 RHT
2	**59580**	54530-02050	✓		✓	✓			✓	✓		

HYUNDAI ATOS 02/98 →

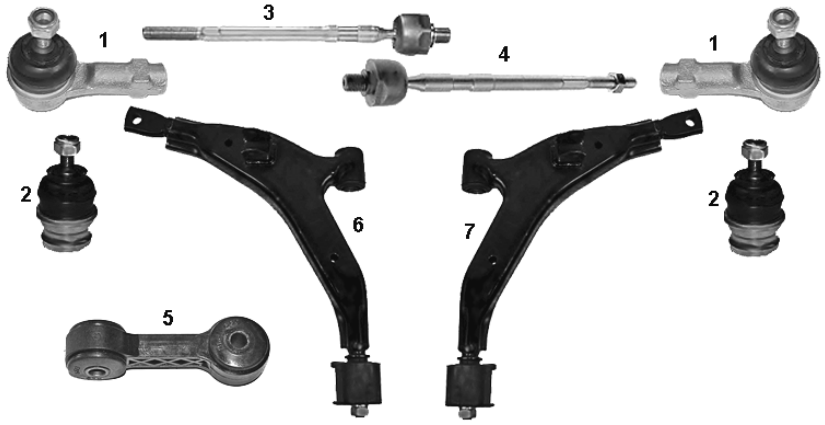

NR	MAPCO	REF								NEW	INFO
1	**59203**	56820-02500	✓		✓	✓			✓	✓		M13x1,5RHT
2	**59580**	54530-02050	✓		✓	✓			✓	✓		
3	**59719**	56540-02000	✓		✓	✓				✓		
4	**59553**	57755-02000	✓		✓	✓			✓			
5	**51209**	54820-02000	✓		✓	✓			✓	✓		
6	**51211**	54500-02051	✓		✓				✓	✓		
7	**51212**	54501-02052	✓			✓			✓	✓		

HYUNDAI COUPE (RD) 06/96→04/02

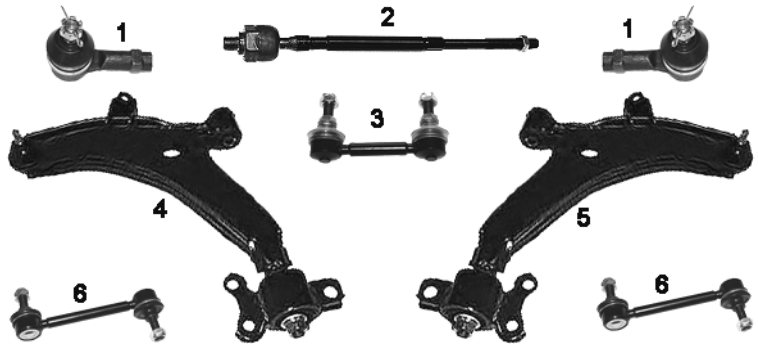

NR	MAPCO	REF								NEW	INFO
1	**19540**	56820-28000	✓		✓	✓			✓	✓		
2	**59573**	57730-29001	✓		✓	✓			✓	✓		
3	**19543HPS**	54830-28000	✓		✓				✓	✓		
4	**51234**	54500-29500	✓		✓				✓	✓	✓	
5	**51235**	54501-29500	✓			✓			✓	✓	✓	
6	**49254HPS**	55530-29000		✓	✓	✓			✓	✓		

HYUNDAI COUPE (GK) 03/02→

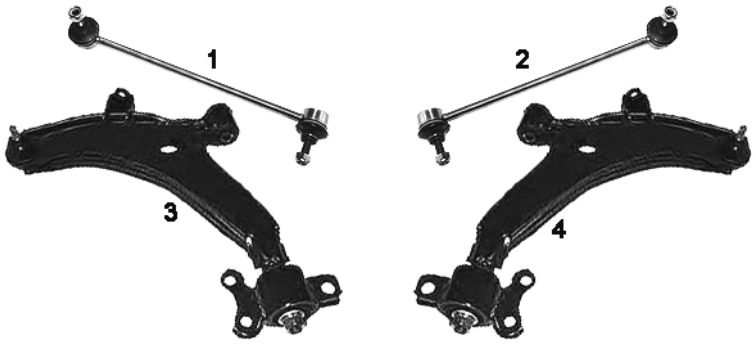

NR	MAPCO	REF								NEW	INFO
1	**59365**	54830-2C000	✓		✓				✓	✓		
2	**59366**	54840-2C000	✓			✓			✓	✓		
3	**51234**	54500-29500	✓		✓				✓	✓	✓	
4	**51235**	54501-29500	✓			✓			✓	✓	✓	

HYUNDAI ELANTRA (XD) 06/00→



NR	MAPCO	REF								NEW	INFO
1	**59554**	57724-2D000	✓		✓				✓	✓		
2	**51220**	54500-2D000	✓		✓				✓	✓	✓	
3	**51221**	54501-2D000	✓			✓			✓	✓	✓	

HYUNDAI GETZ (TB) 09/02→

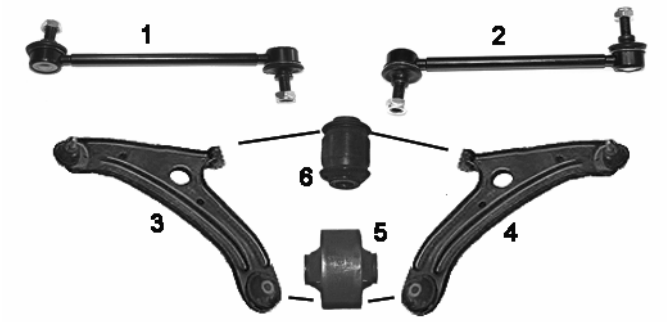

NR	MAPCO	REF								NEW	INFO
1	**59351HPS**	54830-1C000	✓		✓				✓	✓	✓	L: 200,0 mm M10x1,25
2	**59355HPS**	54840-1C000	✓			✓			✓	✓	✓	L: 200,0 mm M10x1,25
3	**59378**	54500-1C000	✓		✓				✓	✓		
4	**59379**	54501-1C010	✓			✓			✓	✓		
5	**33572**		✓		✓	✓			✓	✓		
6	**33573**		✓		✓	✓			✓	✓		

HYUNDAI H-1 Travel 05/08→



NR	MAPCO	REF									NEW	INFO
1	**51222**	56820 4H000	✓		✓				✓	✓	✓	
2	**51223**	56820 4H100	✓			✓			✓	✓	✓	
3	**51228**	54530 3J000	✓		✓	✓		✓	✓	✓	✓	

HYUNDAI H 100 1993→03/00

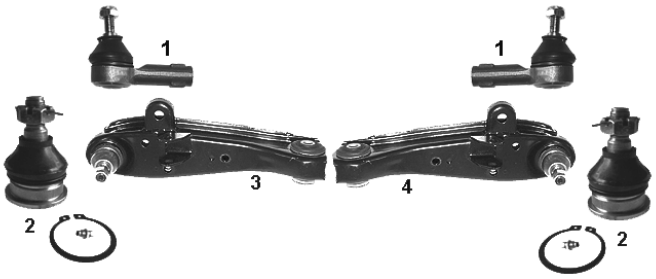

NR	MAPCO	REF									NEW	INFO
1	**19510**	56820-21110	✓		✓	✓			✓	✓		M14x1,5 RHT
2	**19551**	54524-43301	✓		✓	✓		✓	✓	✓		
3	**49940**	54510-43152	✓		✓			✓	✓	✓		
4	**49941**	54540-43150	✓			✓		✓	✓	✓		

HYUNDAI i30 , i30CW Kombi 10/07→

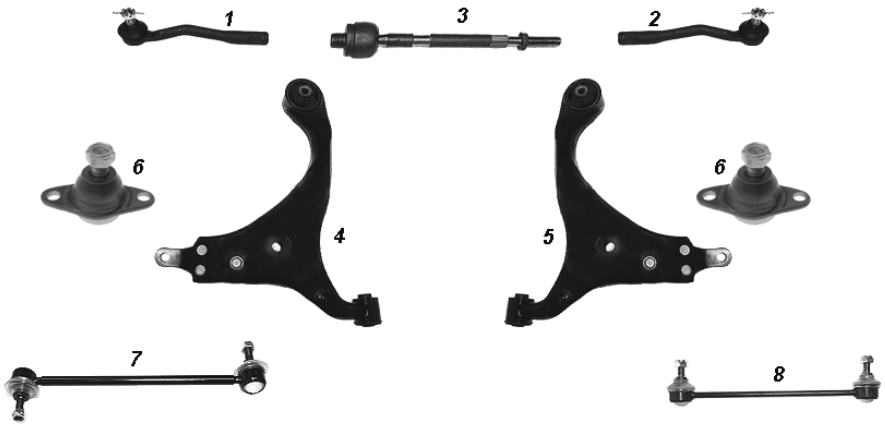

NR	MAPCO	REF									NEW	INFO
1	**51236**	56820-2H000	✓		✓				✓	✓	✓	
2	**51237**	56820-2H090	✓			✓			✓	✓	✓	
3	**51238**	56540-2H000	✓		✓	✓			✓	✓	✓	
4	**51232**	54500-2H000	✓		✓				✓	✓	✓	
5	**51233**	54501-2H000	✓			✓			✓	✓	✓	
6	**51239**	51760-2G000	✓		✓	✓		✓	✓	✓	✓	
7	**51241**	54830-2H000	✓		✓	✓			✓	✓	✓	243,0 mm
8	**51242**	55530-1H000		✓	✓	✓			✓	✓	✓	170,0 mm

HYUNDAI LANTRA I (J-1) 10/90→11/95

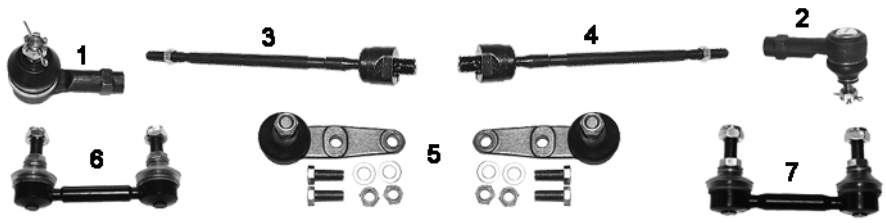

NR	MAPCO	REF								NEW	INFO
1	**19540**	56820-28000	✓		✓	✓			✓			→ 04/92 M12x1,25RHT
2	**19512**	56820-28500	✓		✓	✓			✓	✓		05/92→ M14x1,5RHT
3	**59339**	57730-28000	✓		✓	✓			✓			→04/92 M12x1,25RHT 301mm
4	**59336**	56540-28020	✓		✓	✓			✓			05/92→ M14x1,5RHT 317mm
5	**19513**	54530-28A00	✓		✓	✓			✓	✓		M12x1,25RHT
6	**19543HPS**	54830-37020	✓		✓	✓			✓	✓		STOP **1.5i**
7	**59204**	54830-37010	✓		✓	✓			✓	✓		**✓1.5 i.e. , 1.6 i.e. 16V**

HYUNDAI LANTRA II (J-2) 11/95→09/00

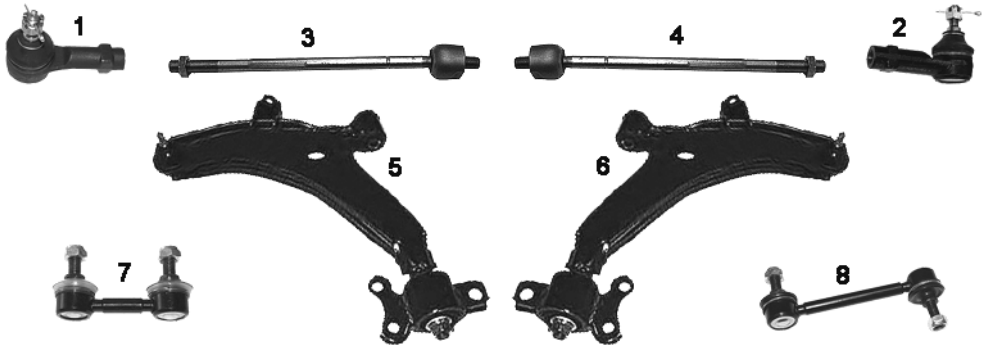

NR	MAPCO	REF									NEW	INFO
1	**49256**	56820-36000	✓		✓	✓			✓	✓		
2	**59202**	56850-28520	✓		✓	✓			✓	✓		✓
3	**59573**	57730-29001	✓		✓	✓			✓	✓		300mm
4	**59336**	56540-28020	✓		✓	✓			✓			M14x1,5RHT 317mm
5	**51234**	54500-29500	✓		✓				✓	✓	✓	
6	**51235**	54501-29500	✓			✓			✓	✓	✓	
7	**49253**	54830-29000	✓		✓	✓			✓	✓		
8	**49254HPS**	55530-29000		✓	✓	✓			✓	✓		

HYUNDAI MATRIX (FC) 06/01→

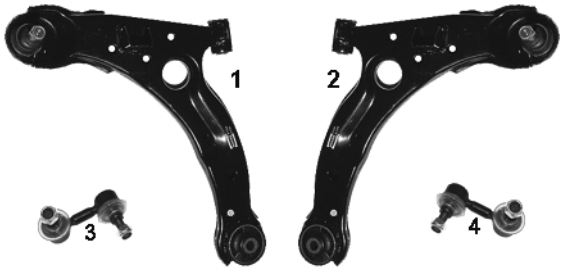

NR	MAPCO	REF								NEW	INFO
1	**51218**	54500-17000	✓		✓			✓	✓	✓		
2	**51219**	54501-17000	✓			✓		✓	✓	✓		
3	**49250HPS**	54830-25010	✓		✓				✓	✓		
4	**49251HPS**	54830-25020	✓			✓			✓	✓		

HYUNDAI PONY - EXCEL 1990→1994

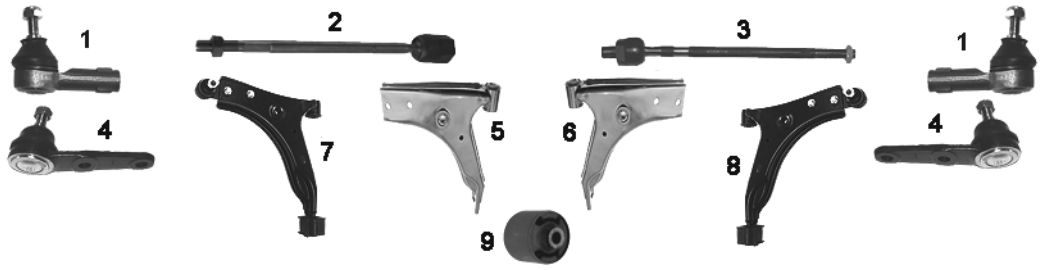

NR	MAPCO	REF								NEW	INFO
1	**19510**	56820-21110	✓		✓	✓			✓	✓		M14x1,5 RHT
2	**59575**	57730-24100	✓		✓	✓			✓			TRW 305mm
3	**19515**	57730-24000	✓		✓	✓			✓			05/92→05/93
4	**19511**	54530-24A00	✓		✓	✓			✓	✓		
5	**59576**	54502-24001	✓		✓				✓	✓		
6	**59577**	54503-24001	✓			✓			✓	✓		
7	**59576/1**	54502-24001	✓		✓				✓	✓		
8	**59577/1**	54503-24001	✓			✓			✓	✓		
9	**33510**	55541-28310		✓	✓	✓			✓	✓		

HYUNDAI SANTA-FE (SM) 02/01→



NR	MAPCO	REF								NEW	INFO
1	**51205HPS**	54830-26000	✓		✓				✓	✓		
2	**51206HPS**	54840-26000	✓			✓			✓	✓		
3	**51208**	55530-26600		✓	✓				✓	✓		
4	**51207**	55540-26600		✓		✓			✓	✓		

HYUNDAI SANTA-FE (CM) 03/06→



NR	MAPCO	REF			←	→	↑	↓			NEW	INFO
1	**51226**	54830-2B000	✓		✓				✓	✓	✓	
2	**51227**	54840-2B000	✓			✓			✓	✓	✓	

HYUNDAI SANTAMO 05/99→



NR	MAPCO	REF			←	→	↑	↓			NEW	INFO
1	**51201**	54830-M2000	✓		✓				✓	✓		
2	**51202**	54840-M2000	✓			✓			✓	✓		

HYUNDAI S-COUPE 07/91→05/96

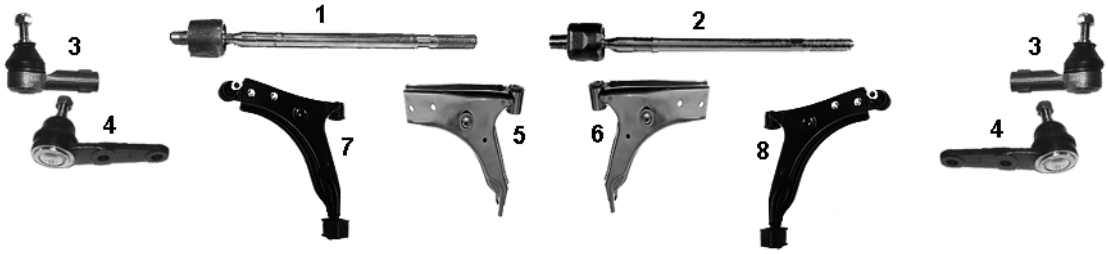

NR	MAPCO	REF			←	→	↑	↓			NEW	INFO
1	**59574**	56540-24001	✓		✓	✓				✓		
2	**59571**	57755-25000	✓		✓	✓			✓			
3	**19510**	56820-21110	✓		✓	✓			✓	✓		M14x1,5 RHT
4	**19511**	54530-24A00	✓		✓	✓			✓	✓		
5	**59576**	54502-24001	✓		✓				✓	✓		
6	**59577**	54503-24001	✓			✓			✓	✓		
7	**59576/1**	54502-24001	✓		✓				✓	✓	✓	
8	**59577/1**	54503-24001	✓			✓			✓	✓	✓	

HYUNDAI SONATA I (Y-2) 01/91→10/93

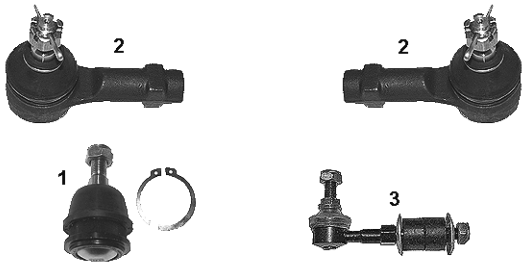

NR	MAPCO	REF			←	→	↑	↓			NEW	INFO
1	**49255**	54503-22A00	✓		✓	✓			✓	✓		
2	**49256**	56820-36000	✓		✓	✓			✓	✓		
3	**59552HPS**	54830-36101		✓	✓	✓			✓	✓		

HYUNDAI SONATA II (Y-3) 05/93→ 06/98

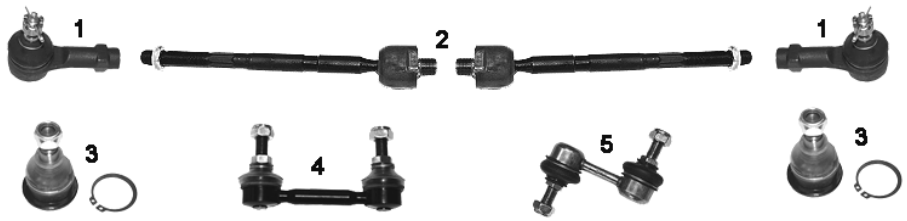

NR	MAPCO	REF								NEW	INFO
1	**49256**	56820-36000	✓		✓	✓			✓		
2	**59555**	57716-34000	✓		✓	✓			✓	✓	M14x1,5 RHT
3	**59585**	54503-34A00	✓		✓	✓			✓	✓	
4	**59551**	54830-34000	✓		✓	✓			✓	✓	
5	**59581**	55580-37020		✓	✓	✓			✓	✓	

HYUNDAI SONATA III (EF) 06/98→10/01

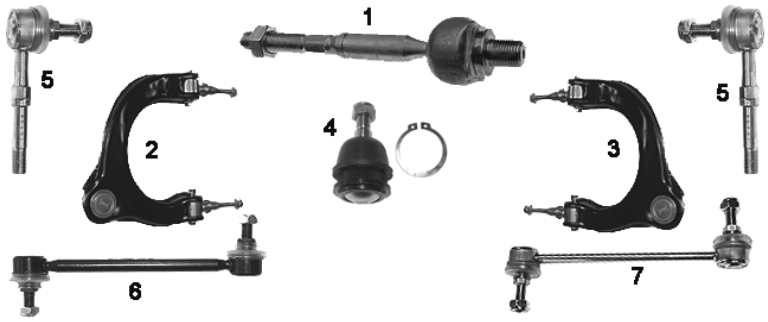

NR	MAPCO	REF								NEW	INFO
1	**59556**	57724-38000	✓		✓	✓			✓		1999→ M14x1,5RHT
2	**59382**	54410-38000	✓		✓		✓		✓	✓	
3	**59383**	54420-38000	✓			✓	✓		✓	✓	
4	**49255**	54503-22A00	✓		✓	✓		✓	✓	✓	
5	**59583**	54830-38100	✓		✓	✓			✓	✓	1999→
6	**59582HPS**	55530-38000		✓	✓	✓			✓	✓	1998→99
7	**59584**	55530-38600		✓	✓	✓			✓	✓	1999→

HYUNDAI SONATA IV 10/01→

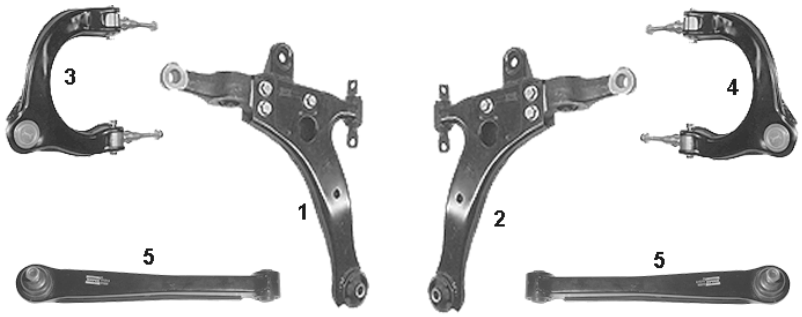

NR	MAPCO	REF								NEW	INFO
1	**59384**	54500-38011	✓		✓			✓	✓	✓	
2	**59385**	54501-38011	✓			✓		✓	✓	✓	
3	**59382**	54410-38000	✓		✓		✓		✓	✓	
4	**59383**	54420-38000	✓			✓	✓		✓	✓	
5	**51215**	55210-38000		✓	✓	✓			✓	✓	

HYUNDAI SONATA V (NF) 01/05→



NR	MAPCO	REF									NEW	INFO
1	**51224**	54500-3K000	✓		✓			✓	✓	✓	✓	LEA
2	**51225**	54501-3K000	✓			✓		✓	✓	✓	✓	LEA

HYUNDAI STAREX 06/97 →
HYUNDAI H-1 10/97 →

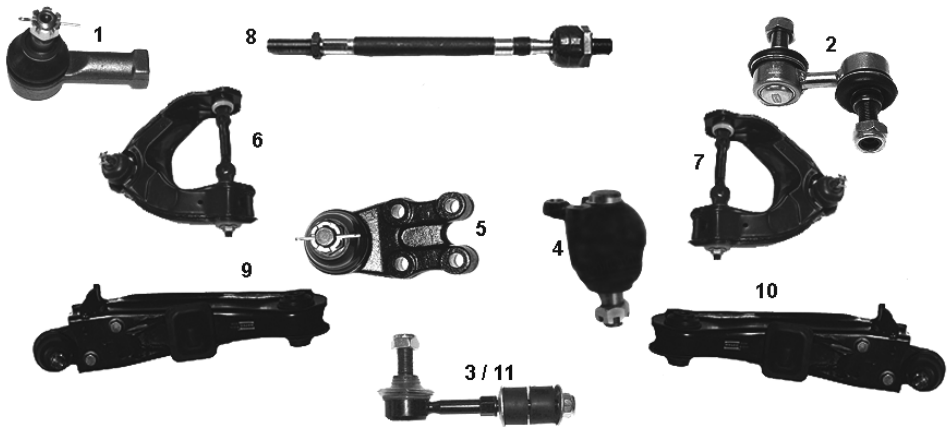

NR	MAPCO	REF									NEW	INFO
1	**59205**	56872-43010	✓		✓	✓			✓	✓		10/97→
2	**59578**	54830-4A002	✓		✓	✓			✓	✓		
3	**59579HPS**	55530-4A000		✓	✓	✓			✓	✓		
4	**59327**	54417-4AA00	✓		✓	✓	✓		✓	✓		
5	**59329**	54530-4AA00	✓		✓	✓		✓	✓	✓		
6	**59386**	54400-4A000	✓		✓		✓		✓	✓		
7	**59387**	54401-4A000	✓			✓	✓		✓	✓		
8	**51210**	57729-4A000	✓		✓	✓			✓	✓		M14x1,5 292 mm
9	**51216**	54500-4A000	✓		✓			✓	✓	✓		
10	**51217**	54501-4A000	✓			✓		✓	✓	✓		
11	**59545HPS**	MR 267875		✓	✓	✓			✓	✓		

HYUNDAI TRAJET (FO) 04/01→



NR	MAPCO	REF									NEW	INFO
1	**51203**	54830-3A000	✓		✓				✓	✓		
2	**51204**	54840-3A000	✓			✓			✓	✓		

HYUNDAI XG 12/98→

NR	MAPCO	REF			←	→	↑	↓			NEW	INFO
1	**59556**	57724-38000	✓		✓	✓			✓	✓		M14x1,5RHT  1

ISUZU

ISUZU CAMPO (KB) 01/83→12/90

NR	MAPCO	REF			←	→	↑	↓			NEW	INFO
1	**49616**	8-94459-464-1	✓		✓	✓		✓	✓	✓		 1

ISUZU TROOPER (UBS) 03/84→12/91





NR	MAPCO	REF			←	→	↑	↓			NEW	INFO
1	**59290**	89422-45503	✓		✓	✓	✓		✓	✓		
2	**49616**	8-94459-464-1	✓		✓	✓		✓	✓	✓		

ISUZU TROOPER (_B_) 08/91 →



NR	MAPCO	REF			←	→	↑	↓			NEW	INFO
1	**19811HPS**	8-97018-228-2	✓		✓				✓	✓		
2	**59849**	8-97018-227-2	✓			✓			✓	✓		

ISUZU TROOPER 04/00 →

NR	MAPCO	REF			←	→	↑	↓			NEW	INFO
1	**51594HPS**	8-97018-125-2		✓	✓	✓			✓	✓	✓	 1

IVECO

IVECO DAILY I — 01/78→04/99

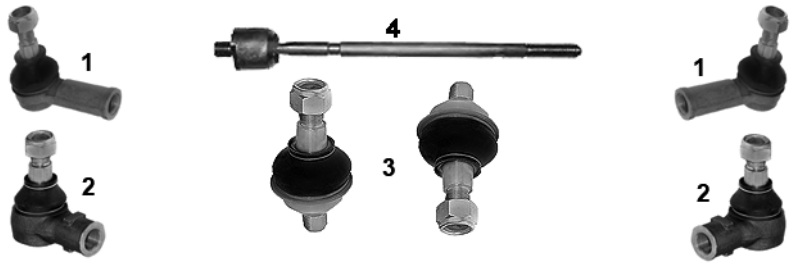

NR	MAPCO	REF									NEW	INFO
1	**19406**	93800662	✓		✓	✓			✓	✓		ø 16mm / M16x1,5RHT
2	**19407**	93802209	✓		✓	✓			✓	✓		ø 21mm / M20x1,5RHT
3	**19408**	93802242	✓		✓	✓	✓	✓	✓	✓		ø 21,5 mm
4	**19404**	998 3325	✓		✓	✓			✓	✓		330,0mm

IVECO DAYLY II — 05/99→



NR	MAPCO	REF									NEW	INFO
1	**19423**	4253 4911	✓		✓	✓			✓	✓	✓	
2	**19404**	998 3325	✓		✓	✓			✓	✓		330,0mm
3	**19424**	299 2593	✓		✓	✓			✓	✓	✓	325,0mm

IVECO DAYLY CITY — 01/00→



NR	MAPCO	REF									NEW	INFO
1	**59025**	4253 2977	✓		✓	✓			✓	✓	✓	

JAGUAR

JAGUAR XJ SERIE III — →1988
JAGUAR XJ SERIE 40 — →1997



NR	MAPCO	REF									NEW	INFO
1	**49648**	CAC 9938	✓		✓	✓	✓		✓	✓		
2	**49649**	CAC 9937	✓		✓	✓		✓	✓	✓		

JAGUAR X-TYPE (CF1) 06/01→
JAGUAR X-TYPE ESTATE 02/04→

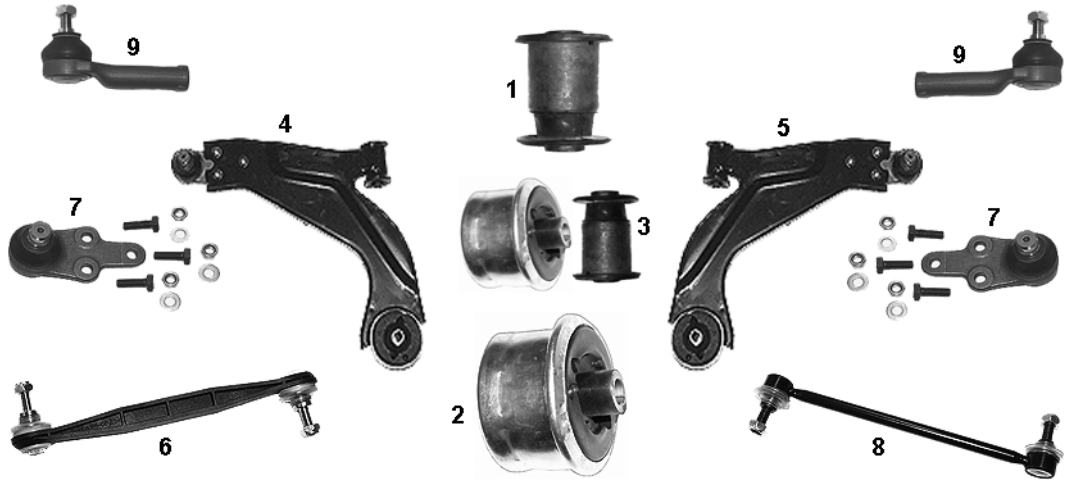

NR	MAPCO	REF			←	→	↑	↓			NEW	INFO
1	**33646**	1118476	✓		✓	✓			✓	✓		
2	**33647**	1311416	✓		✓	✓			✓	✓		
3	**33646/7**		✓		✓	✓			✓	✓		
4	**59644**	C2S 39662	✓		✓				✓	✓		
5	**59645**	C2S 39661	✓			✓			✓	✓		
6	**19777**	C2S 26883	✓		✓	✓			✓	✓		250,0 mm Plastik
7	**59673**	C2S 396612	✓		✓	✓		✓	✓	✓		
8	**19773HPS**	C2S 3248	✓		✓	✓			✓	✓		250,0 mm Stahl/steel
9	**59672**	CS2 47357	✓		✓	✓			✓	✓		M16x1,5

JEEP

JEEP CHEROKEE (XJ) 10/84→



NR	MAPCO	REF			←	→	↑	↓			NEW	INFO
1	**49932**	52087710	✓		✓	✓	✓		✓	✓		
2	**49933**	52088312	✓		✓	✓		✓	✓	✓		

JEEP GRAND CHEROKEE I (Z) 09/91→04/99



NR	MAPCO	REF									NEW	INFO
1	**49932**	52087710	✓		✓	✓	✓		✓	✓		
2	**49933**	52088312	✓		✓	✓		✓	✓	✓		
3	**49934**	52088520		✓	✓	✓	✓		✓	✓		
4	**49935**	52088521		✓	✓	✓		✓	✓	✓		

JEEP WRANGLER II (TJ) 08/96→



NR	MAPCO	REF									NEW	INFO
1	**49934**	52088520		✓	✓	✓	✓		✓	✓		

KIA

KIA CARNIVAL (UP) 08/99→10/01



NR	MAPCO	REF									NEW	INFO
1	**51230**	0K552-34-160B	✓		✓	✓			✓	✓	✓	

KIA CARNIVAL II 10/01→



NR	MAPCO	REF									NEW	INFO
1	**51230**	0K552-34-160B	✓		✓	✓			✓	✓	✓	

KIA CEE'D 09/07→

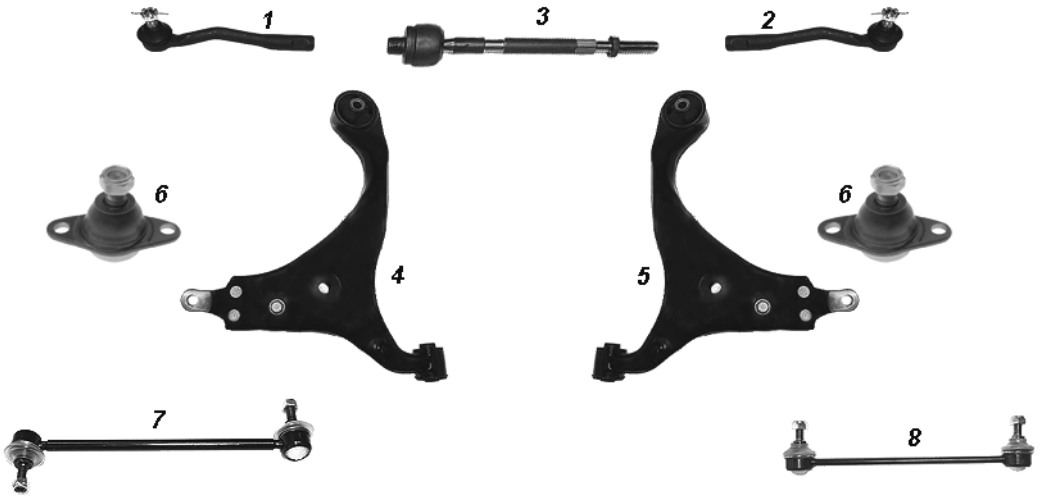

NR	MAPCO	REF			←	→	↑	↓			NEW	INFO
1	**51236**	56820-2H000	✓		✓				✓	✓	✓	
2	**51237**	56820-2H090	✓			✓			✓	✓	✓	
3	**51238**	56540-2H000	✓		✓	✓			✓	✓	✓	
4	**51232**	54500-2H000	✓		✓				✓	✓	✓	
5	**51233**	54501-2H000	✓			✓			✓	✓	✓	
6	**51239**	51760-2G000	✓		✓	✓		✓	✓	✓	✓	
7	**51241**	54830-2H000	✓		✓	✓			✓	✓	✓	243,0 mm
8	**51242**	55530-1H000		✓	✓	✓			✓	✓	✓	170,0 mm

KIA CLARUS (K9A) 07/96→



NR	MAPCO	REF			←	→	↑	↓			NEW	INFO
1	**59342**	0K9A2-32-280	✓		✓	✓			✓	✓		
2	**59590**	KGA2A-34-170A	✓		✓				✓	✓		
3	**59591**	KGA2A-34-150A	✓			✓			✓	✓		
4	**51231**	KGA2C-28-170A		✓	✓	✓			✓	✓		88,0 mm

KIA JOICE 2.0 02/00→



NR	MAPCO	REF			←	→	↑	↓			NEW	INFO
1	**51201**	54830-M2000	✓		✓				✓	✓		
2	**51202**	54840-M2000	✓			✓			✓	✓		

KIA MAGENTIS (GD) 05/01→



NR	MAPCO	REF								NEW	INFO
1	**51215**	55210-38000		✓	✓	✓			✓	✓	

KIA PRIDE (DA) 01/90→

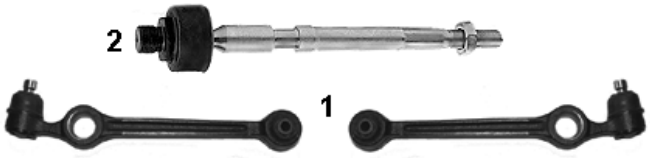

NR	MAPCO	REF								NEW	INFO
1	**51531**	KKY01-34-390A	✓		✓		✓		✓	✓	
2	**51533**	KK150-32-240	✓		✓	✓			✓	✓	M12x1,5RHT

KIA PRO CEE'D 02/08→

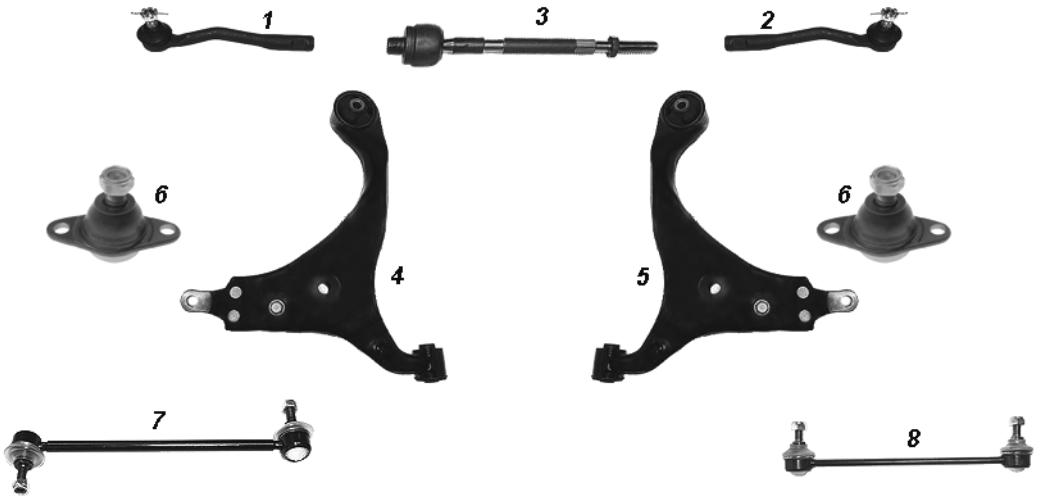

NR	MAPCO	REF									NEW	INFO
1	**51236**	56820-2H000	✓		✓				✓	✓	✓	
2	**51237**	56820-2H090	✓			✓			✓	✓	✓	
3	**51238**	56540-2H000	✓		✓	✓			✓	✓	✓	
4	**51232**	54500-2H000	✓		✓				✓	✓	✓	
5	**51233**	54501-2H000	✓			✓			✓	✓	✓	
6	**51239**	51760-2G000	✓		✓	✓		✓	✓	✓	✓	
7	**51241**	54830-2H000	✓		✓	✓			✓	✓	✓	243,0 mm
8	**51242**	55530-1H000		✓	✓	✓			✓	✓	✓	170,0 mm

KIA SEPHIA (FA) 09/93→

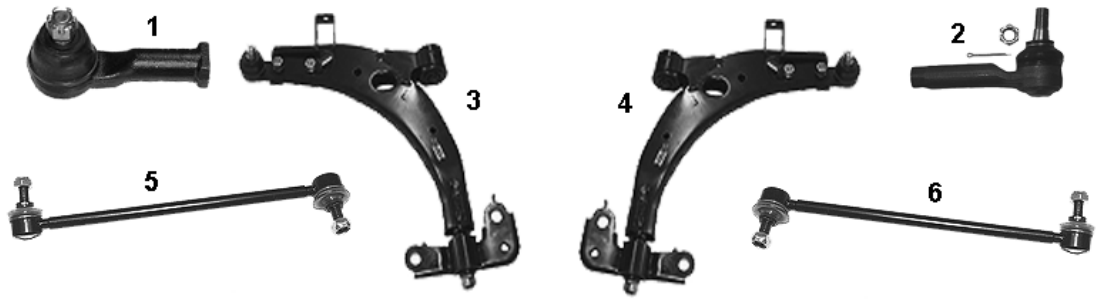

NR	MAPCO	REF								NEW	INFO
1	**49518**	0K201-32-280	✓		✓	✓			✓	✓		→ 04/97
2	**59342**	0K9A2-32-280	✓		✓	✓			✓	✓		05/97→
3	**51582**	0K2A1-34-350B	✓		✓				✓	✓		
4	**51583**	0K2A1-34-300B	✓			✓			✓	✓		
5	**59344HPS**	0K2N1-34-170A	✓		✓				✓	✓		
6	**59341HPS**	0K2N1-34-150A	✓			✓			✓	✓		

KIA SHUMA (FB) 10/97→12/01

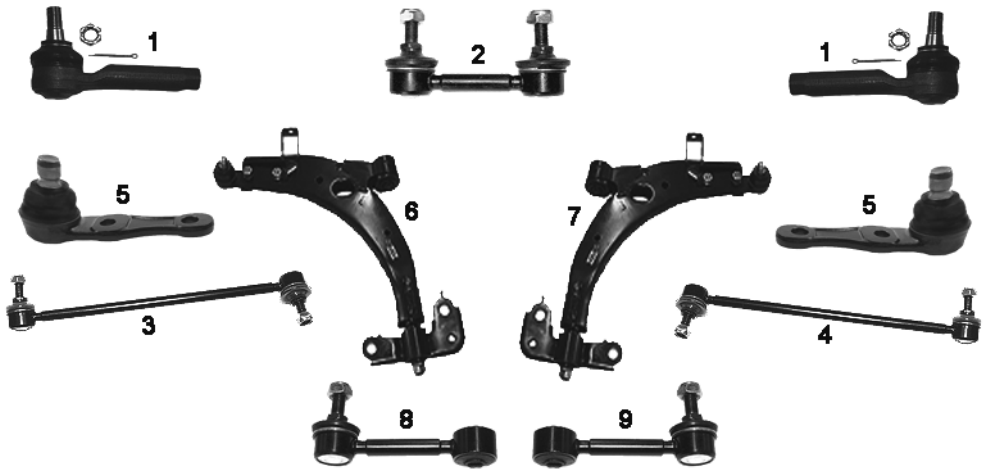

NR	MAPCO	REF								NEW	INFO
1	**59342**	0K9A2-32-280	✓		✓	✓			✓	✓		
2	**59589**	0K2A5-34-150A	✓		✓	✓			✓	✓		**80mm**
3	**59344HPS**	0K2N1-34-170A	✓		✓				✓	✓		
4	**59341HPS**	0K2N1-34-150A	✓			✓			✓	✓		
5	**59346**	0K2A1-34-550A	✓		✓	✓		✓	✓	✓		
6	**51582**	0K2A1-34-350	✓		✓				✓	✓		
7	**51583**	0K2A1-34-300B	✓			✓			✓	✓		
8	**59594HPS**	0K2A1-34-150A		✓	✓	✓			✓	✓		
9	**59343HPS**	0K2A1-28-150B		✓	✓	✓			✓	✓		

KIA SHUMA II (FB) 05/01→08/04

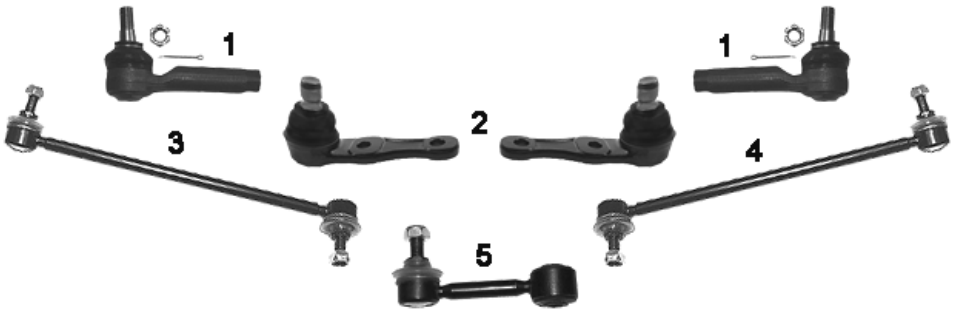

NR	MAPCO	REF										INFO
1	**59342**	0K9A2-32-280	✓		✓	✓			✓	✓		
2	**59346**	0K2A1-34-550A	✓		✓	✓		✓	✓	✓		
3	**59344HPS**	0K2N1-34-170A	✓		✓				✓	✓		
4	**59341HPS**	0K2N1-34-150A	✓			✓			✓	✓		
5	**59343HPS**	0K2A1-28-150B		✓	✓	✓			✓	✓		

KIA SORENTO (JC) 08/02→



NR	MAPCO	REF									NEW	INFO
1	**51532**	54810 3E000	✓		✓	✓			✓	✓		

KIA SPORTAGE (K00) 04/94→

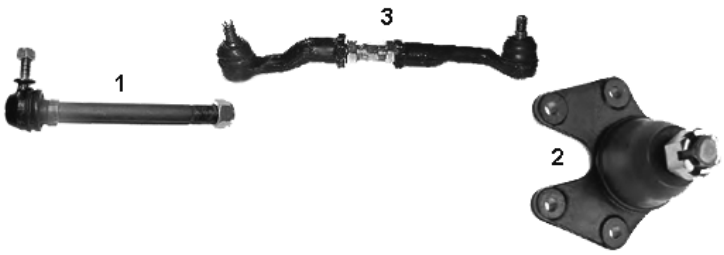

NR	MAPCO	REF									NEW	INFO
1	**59345**	0K011-34-160A	✓		✓	✓			✓	✓		
2	**59337**	0K011-34-510B	✓		✓	✓			✓	✓		
3	**59230**	0K011-32-270A	✓		✓	✓			✓	✓		

LADA

LADA SHIGULI 1200-1300-1500-1600
LADA VAZ 2101-1200

1972→02/93

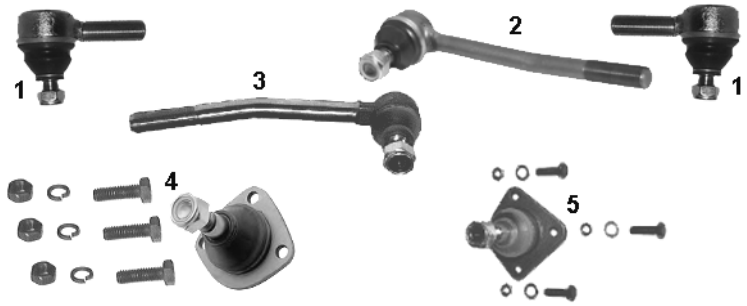

NR	MAPCO	REF									NEW	INFO
1	**19080**	21013003057	✓		✓	✓				✓		M16x1RHT aussen/ outside
2	**19082**	21013003064	✓		✓	✓				✓		M16x1RHT innen/ inner
3	**19081**	21013003050	✓		✓	✓				✓		M16x1RHT innen/ inner
4	**19085**	21012904185	✓		✓	✓				✓		
5	**19084**	21012904063	✓		✓	✓				✓		

LADA NIVA

1975→



NR	MAPCO	REF									NEW	INFO
1	**19080**	21013003057	✓		✓	✓				✓		M16x1RHT aussen/ outside
2	**19085**	21012904185	✓		✓	✓	✓	✓		✓		

LADA SAMARA

1985→

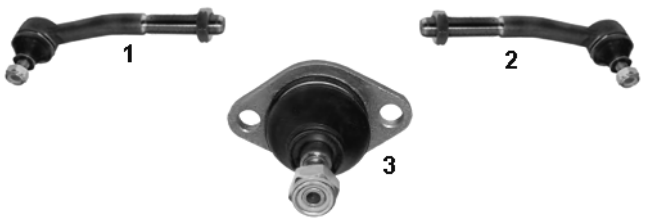

NR	MAPCO	REF									NEW	INFO
1	**19090**	21083414057	✓		✓					✓		M18x1,5LHT
2	**19089**	21083414056	✓			✓				✓		M18x1,5LHT
3	**19091**	21082904185	✓		✓	✓	✓			✓		

LADA 110, 111, 112 — 01/95→



NR	MAPCO	REF			←	→	↑	↓			NEW	INFO
1	**19092**	21103414057	✓		✓				✓	✓		M18x1,5 LHT
2	**19093**	21103414056	✓			✓			✓	✓		M18x1,5 LHT

LANCIA

LANCIA Y10 — 1985→12/95

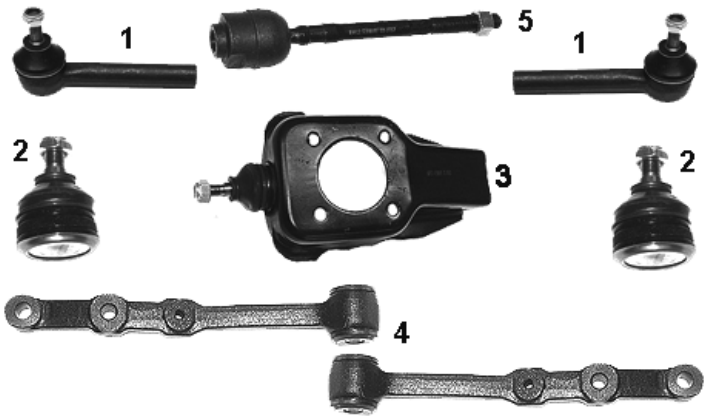

NR	MAPCO	REF			←	→	↑	↓			NEW	INFO
1	**19047**	5958246	✓		✓	✓				✓		M12x1,5RHT
2	**19044**	4402649	✓		✓	✓				✓		
3	**19048**	4403138	✓		✓	✓				✓		
4	**19045**	4402672	✓		✓	✓				✓		
5	**19452**	5960321	✓		✓	✓				✓	✓	M12x1,5RH

LANCIA DEDRA 1990→07/99
LANCIA DELTA II (836) 1993→08/99

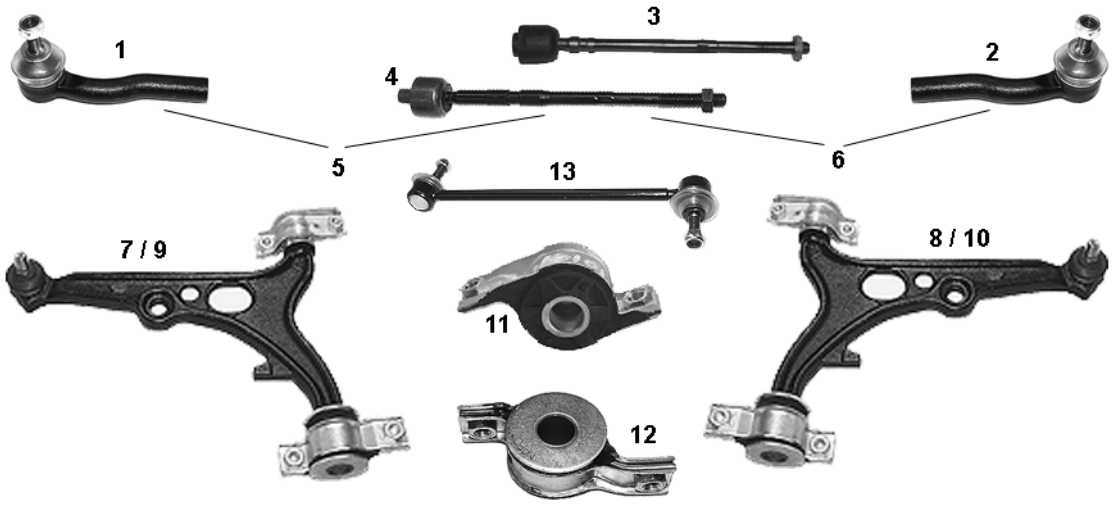

NR	MAPCO	REF								NEW	INFO
1	**19052**	7591216	✓		✓				✓	✓		M12x1,5RHT
2	**19053**	7591215	✓			✓			✓	✓		M12x1,5RHT
3	**19043**	7633221	✓		✓	✓				✓		M12x1,5RHT
4	**19022**	9941625	✓		✓	✓			✓			M12x1,5RHT
5	**19022/1**		✓		✓				✓			**1 + 4**
6	**19022/2**		✓			✓			✓			**2 + 4**
7	**19056**	82461081	✓		✓				✓	✓		Ø 17 mm ✓ TD
8	**19057**	82461082	✓			✓			✓	✓		Ø 17 mm ✓ TD
9	**19009**	46423822	✓		✓				✓	✓		STOP TD
10	**19010**	46423823	✓			✓			✓	✓		STOP TD
11	**33019**	7601065	✓		✓				✓	✓		
12	**33035**	7601068	✓			✓			✓	✓		
13	**19026HPS**	46413122	✓		✓	✓			✓	✓		

LANCIA DELTA III 09/08→

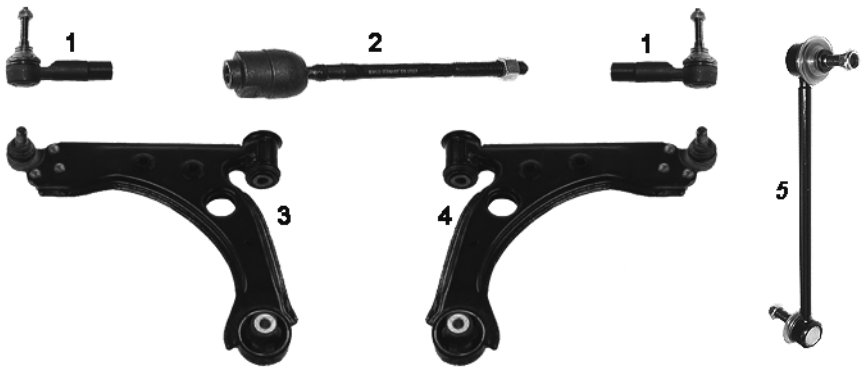

NR	MAPCO	REF								NEW	INFO
1	**49040**	9949218	✓		✓	✓			✓	✓		
2	**49043**	9949217	✓		✓	✓			✓	✓		
3	**49094**	50705464	✓		✓				✓	✓	✓	
4	**49095**	50705465	✓			✓			✓	✓	✓	
5	**19028HPS**	50700941	✓		✓	✓			✓	✓	✓	

LANCIA KAPPA 1994→10/01

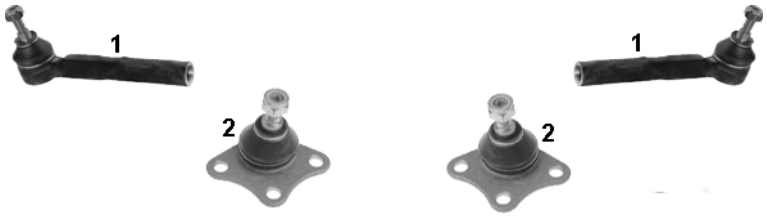

NR	MAPCO	REF								NEW	INFO
1	**19059**	82387676	✓		✓	✓			✓	✓		M14x1,5RHT
2	**49014**	82480099	✓		✓	✓			✓	✓		

LANCIA LYBRA 07/99→



NR	MAPCO	REF								NEW	INFO
1	**49098**	9947926	✓		✓	✓			✓	✓	✓	M14x1,5RHT
2	**59011**	9948296	✓		✓	✓			✓	✓	✓	

LANCIA MUSA 10/04→



NR	MAPCO	REF								NEW	INFO
1	**49059**	77362503	✓		✓	✓			✓	✓		M14x1,5RHT
2	**49071**	77362380	✓		✓	✓			✓	✓		
3	**49078**	50703232	✓		✓				✓	✓		
4	**49079**	50703231	✓			✓			✓	✓		

LANCIA PHEDRA (179) 09/02→



NR	MAPCO	REF								NEW	INFO
1	**19376HPS**	13312 09080	✓		✓	✓			✓	✓		
2	**19492**	773 662 79	✓		✓	✓			✓	✓		M14x1,5

LANCIA THEMA 03/84→07/94

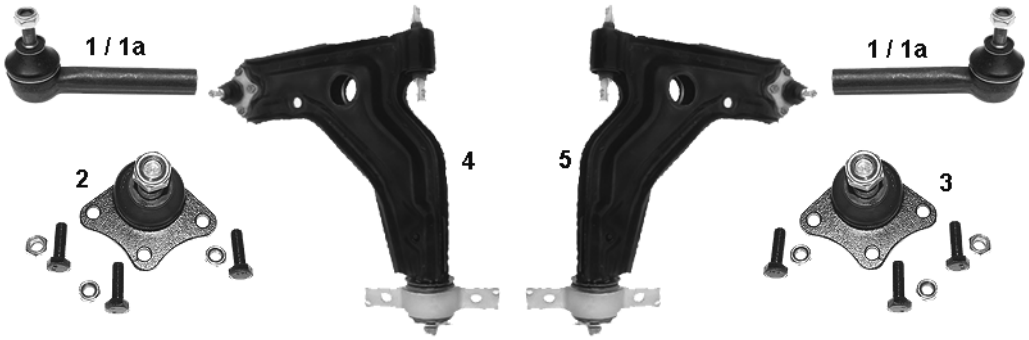

NR	MAPCO	REF									NEW	INFO
1	**19058**	82392503	✓		✓	✓			✓	✓		M12x1,5RHT, →03/86
1a	**19059**	82387676	✓		✓	✓			✓	✓		M14x1,5RHT, 04/86→
2	**19060**	82398170	✓		✓	✓			✓	✓		Ø 13 mm, →12/91
3	**19008**	82420623	✓		✓	✓			✓	✓		Ø 15 mm, 01/92→
4	**19020**	82480039	✓		✓				✓	✓		Ø 15 mm, 01/92→
5	**19021**	82480038	✓			✓			✓	✓		Ø 15 mm, 01/92→

LANCIA Y (840A) 11/95→



NR	MAPCO	REF									NEW	INFO
1	**19066**	7750977	✓		✓	✓			✓	✓		
2	**19067**	7750978	✓		✓	✓			✓	✓		
3	**33005**	46476755		✓	✓	✓			✓	✓		
4	**34053**	17736515		✓	✓	✓			✓	✓		
5	**33039**	7755671		✓	✓	✓			✓	✓		**vorn/front**
6	**33040**	7756218		✓	✓	✓			✓	✓		**hinten/rear**

LANCIA YPSILON 10/03→



NR	MAPCO	REF									INFO
1	**59010**	77362381	✓		✓	✓			✓	✓	✓	
2	**49071**	77362380	✓		✓	✓			✓	✓		
3	**49078**	50703232	✓		✓				✓	✓		
4	**49079**	50703231	✓			✓			✓	✓		

LANCIA ZETA 1994→09/02



NR	MAPCO	REF									INFO
1	**19078**	1306003080	✓		✓	✓			✓	✓		M14x1,5RHT
2	**19023**	9566950880	✓		✓	✓			✓	✓		M14x1,5
3	**19431**	1313083080	✓		✓				✓	✓		✓ D, TD
4	**19432**	1313084080	✓			✓			✓	✓		✓ D, TD
5	**33017**	1312317080	✓		✓	✓			✓	✓		

LAND ROVER

LAND ROVER 90/110 (DHMC) 09/85→07/90



NR	MAPCO	REF								NEW	INFO
1	**59680**	RTC 5870	✓		✓				✓	✓		11/16"x16 LHT
2	**59681**	RTC 5869	✓			✓			✓	✓		11/16"x16 RHT
3	**59682**	575 882		✓	✓	✓	✓		✓	✓		-12/00
4	**59683**	ANR 1799		✓	✓	✓		✓	✓	✓		

LAND ROVER DEFENDER (LD) 2.5 90TDI 09/90→
LAND ROVER DEFENDER (LD) 2.5 + 3.9 V8 09/90→

NR	MAPCO	REF								NEW	INFO
1	**59678**	NTC 1888	✓	✓	✓	✓			✓	✓		 1

LAND ROVER DISCOVERY I 09/89→06/94



NR	MAPCO	REF								NEW	INFO
1	**59680**	RTC 5870	✓		✓				✓	✓		11/16"x16 LHT
2	**59681**	RTC 5869	✓			✓			✓	✓		11/16"x16 LHT
3	**59682**	575 882		✓	✓	✓	✓		✓	✓		
4	**59683**	ANR 1799		✓	✓	✓		✓	✓	✓		

LAND ROVER DISCOVERY II (LJ, LT) 06/94→

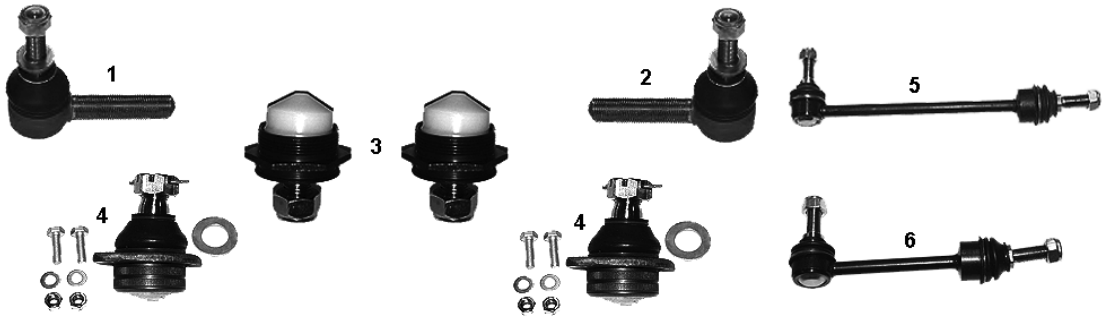

NR	MAPCO	REF								NEW	INFO
1	**59680**	RTC 5870	✓		✓				✓	✓		11/16''x16 LHT
2	**59681**	RTC 5869	✓			✓			✓	✓		11/16''x16 LHT
3	**59682**	575 882		✓	✓	✓	✓		✓	✓		→12/98
4	**59683**	ANR 1799		✓	✓	✓		✓	✓	✓		→12/97
5	**59697**	RBM 100223	✓		✓	✓			✓	✓	✓	
6	**59698**	RGD 100682		✓	✓	✓			✓	✓	✓	

LAND ROVER DISCOVERY III (TAA) 10/04→



NR	MAPCO	REF								NEW	INFO
1	**51684**	QJB 500010	✓		✓	✓			✓	✓	✓	
2	**51685**	RBK 500300	✓		✓	✓			✓	✓	✓	
3	**51681**	RBM 500190	✓		✓	✓			✓	✓	✓	330,0mm
4	**51682**	RGD 000312		✓	✓	✓			✓	✓	✓	

LAND ROVER FREELANDER 02/98→



NR	MAPCO	REF									NEW	INFO
1	**59684**	QJB 100230	✓		✓				✓	✓		M16x1,5LHT
2	**59685**	QJB 100220	✓			✓			✓	✓		M16x1,5LHT
3	**59686**		✓		✓	✓		✓	✓	✓		
4	**59687**	RBM 100172	✓		✓	✓			✓	✓		
5	**59688**	RBJ 102450	✓		✓				✓	✓		
6	**59689**	RBJ 102440	✓			✓			✓	✓		

LAND ROVER FREELANDER 2 (FA) 10/06→



NR	MAPCO	REF									NEW	INFO
1	**51619**	LR0 02610	✓		✓				✓	✓	✓	M18x1,5
2	**51620**	LR0 02609	✓			✓			✓	✓	✓	M18x1,5

LAND ROVER RANGE ROVER I 04/86→ 07/94



NR	MAPCO	REF									NEW	INFO
1	**59680**	RTC 5870	✓		✓				✓	✓		11/16"x16 LHT
2	**59681**	RTC 5869	✓			✓			✓	✓		11/16"x16 LHT
3	**59682**	575 882		✓	✓	✓	✓		✓	✓		
4	**59683**	ANR 1799		✓	✓	✓		✓	✓	✓		

LAND ROVER RANGE ROVER II (LP) 07/94→ 03/02



NR	MAPCO	REF			←	→	↑	↓			NEW	INFO
1	**59679**	ANR 3304	✓		✓	✓			✓	✓		

LAND ROVER RANGE ROVER III (LM) 03/02→

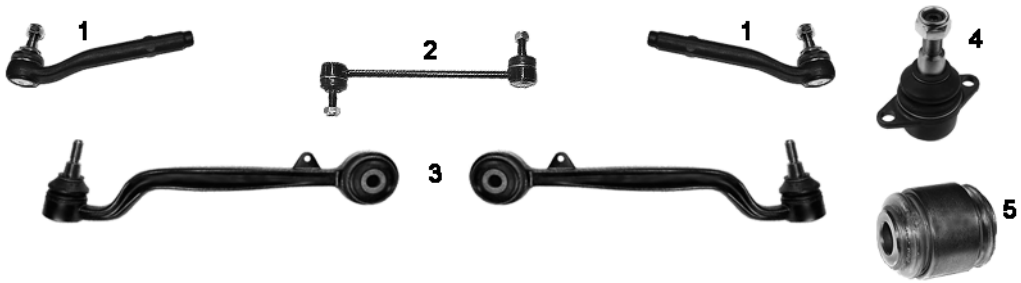

NR	MAPCO	REF			←	→	↑	↓			NEW	INFO
1	**51683**	QJB 500050	✓		✓	✓			✓	✓	✓	Ø 18,0 mm
2	**51686**	RBM 500200	✓		✓	✓			✓	✓	✓	380,0 mm
3	**51687**	RBJ 500920	✓		✓	✓		✓	✓	✓	✓	
4	**51688**	RBK 500210	✓		✓	✓			✓	✓	✓	
5	**36690**	RHF 000260		✓	✓	✓	✓		✓	✓	✓	

LAND ROVER RANGE ROVER SPORT (LS) 02/05→

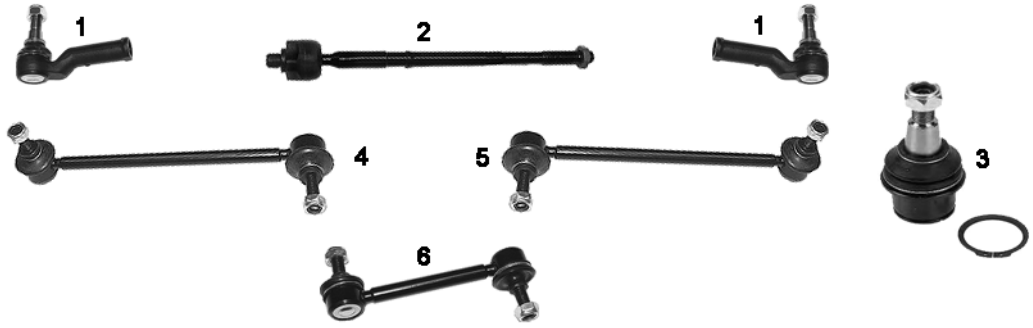

NR	MAPCO	REF			←	→	↑	↓			NEW	INFO
1	**51689**	QJB 500040	✓		✓	✓			✓	✓	✓	M16x1,5 Ø 20,0 mm
2	**51692**	QFK 500030	✓		✓	✓			✓	✓	✓	M16x1,5
3	**51685**	RBK 500300	✓		✓	✓			✓	✓	✓	Ø 26,0 mm
4	**51693**	RBM 500150	✓		✓				✓	✓	✓	
5	**51694**	RBM 500140	✓			✓			✓	✓	✓	
6	**51682**	RGD 000312		✓	✓	✓			✓	✓	✓	

LEXUS

LEXUS ES (F1,F2) 09/91→12/97



NR	MAPCO	REF								NEW	INFO
1	**51552**	48069-33050	✓		✓			✓	✓	✓		
2	**51553**	48068-33070	✓			✓		✓	✓	✓		

LEXUS GS 300 08/97→

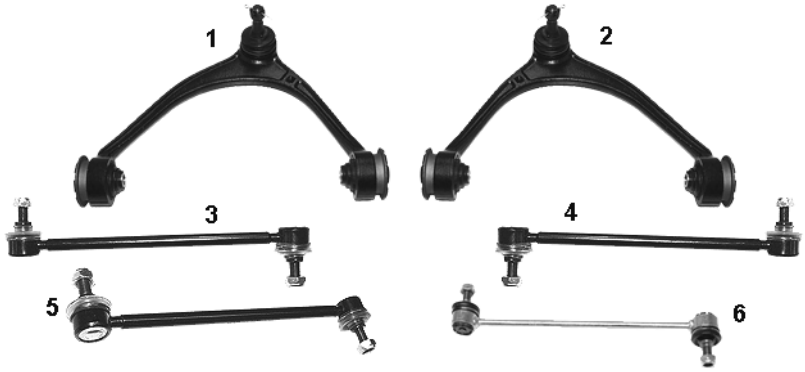

NR	MAPCO	REF								NEW	INFO
1	**49950**	48630-39055	✓		✓		✓		✓	✓		
2	**49951**	48610-39085	✓			✓	✓		✓	✓		
3	**49280HPS**	48810-33010	✓		✓				✓	✓		
4	**49281HPS**	48820-33020	✓			✓			✓	✓		
5	**49282HPS**	48830-32040		✓	✓	✓			✓	✓		250,0 mm
6	**49285**	48830-33010		✓	✓	✓			✓	✓		165,0 mm

LEXUS RX (MCU) 05/03→



NR	MAPCO	REF								NEW	INFO
1	**51388**	43330-29405	✓		✓				✓	✓	✓	17,5 mm
2	**51389**	45503-39225	✓			✓			✓	✓	✓	17,5 mm

MAZDA

MAZDA 21 DA - DB3 10/87→10/90

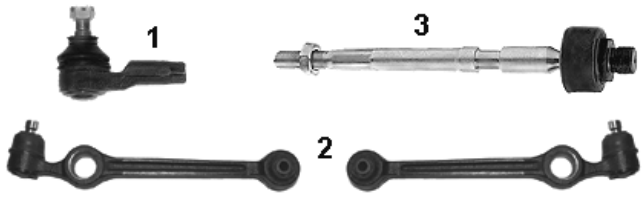

NR	MAPCO	REF			←	→	↑	↓			NEW	INFO
1	**19580**	8AB1-32-280	✓		✓	✓			✓	✓		
2	**51531**	KKY01-34-390A	✓		✓	✓		✓	✓	✓		
3	**51533**	KK150-32-240	✓		✓	✓			✓	✓		✓ DA M12x1,5RHT

MAZDA 121 DB1 11/90→03/96



NR	MAPCO	REF			←	→	↑	↓			NEW	INFO
1	**19583**	8AB2-32-280	✓		✓	✓			✓	✓		

MAZDA 21 III (ZQ) 03/96→

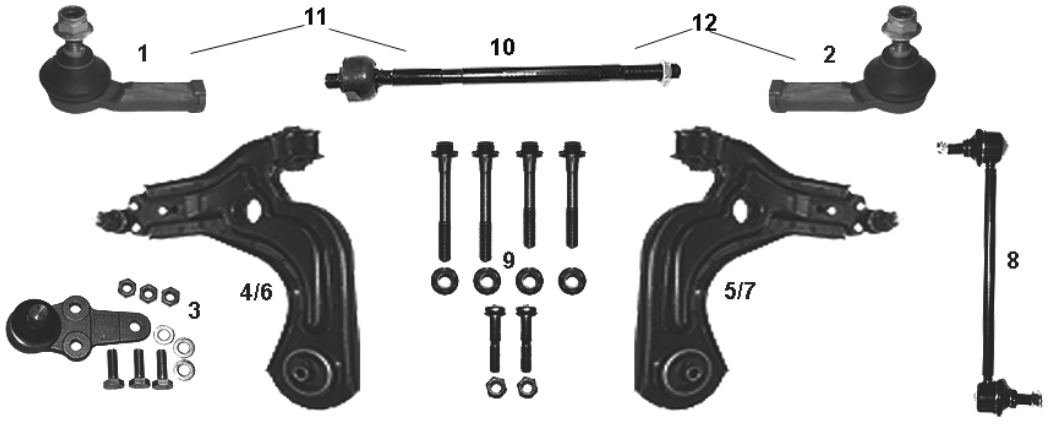

NR	MAPCO	REF			←	→	↑	↓			NEW	INFO
1	**19640**	1E01-32-280A	✓		✓				✓	✓		M16x1,5RHT
2	**19641**	1E00-32-280A	✓			✓			✓	✓		M16x1,5RHT
3	**19763**	1E00-34-550	✓		✓	✓			✓	✓		
4	**19642**	1E00-34-350A	✓		✓					✓		
5	**19643**	1E03-34-300A	✓			✓				✓		
6	**19642/1**	1E01-34-350A	✓		✓				✓			
7	**19643/1**	1E01-34-300A	✓			✓			✓			
8	**19604HPS**	1E01-34-170	✓		✓	✓			✓	✓		
9	**95642**		✓		✓	✓			✓	✓		MS
10	**19644**	1E00-32-240	✓		✓	✓			✓	✓		320 mm
11	**19644/1**		✓		✓				✓	✓		**10+1**
12	**19644/2**		✓			✓			✓	✓		**10+2**

MAZDA 2 — 04/03→

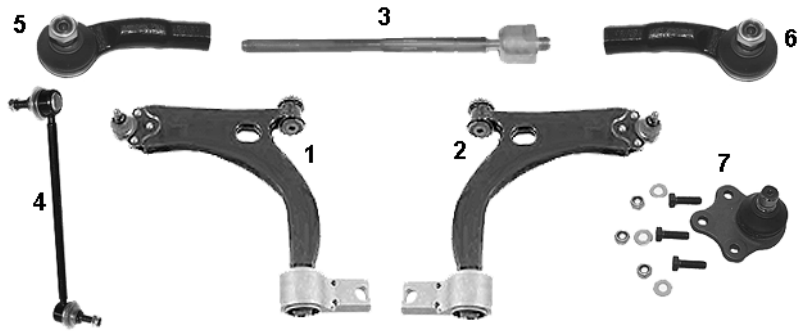

NR	MAPCO	REF									NEW	INFO
1	**59650**	DD32-34-350	✓		✓				✓	✓		
2	**59651**	DD32-34-300	✓			✓			✓	✓		
3	**59663**	DE90-32-240	✓		✓	✓			✓	✓		M14x1,5
4	**19774HPS**	DD32-34-170	✓		✓	✓			✓	✓		
5	**59669**	DE90-32-290	✓		✓				✓	✓		M10x1,5 / M14X1,5
6	**59670**	DE90-32-280	✓			✓			✓	✓		M10x1,5 / M14X1,5
7	**59671**	2S613395AB	✓		✓	✓			✓	✓		Ø 16,5mm

MAZDA 323 (BD1) — 11/80→01/85

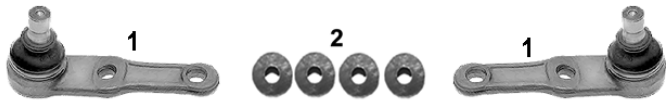

NR	MAPCO	REF									NEW	INFO
1	**19582**	B092-34-550	✓		✓	✓			✓	✓		
2	**33532/4**		✓		✓	✓			✓	✓		

MAZDA 323 (BF) - (BW) — 02/85→10/89

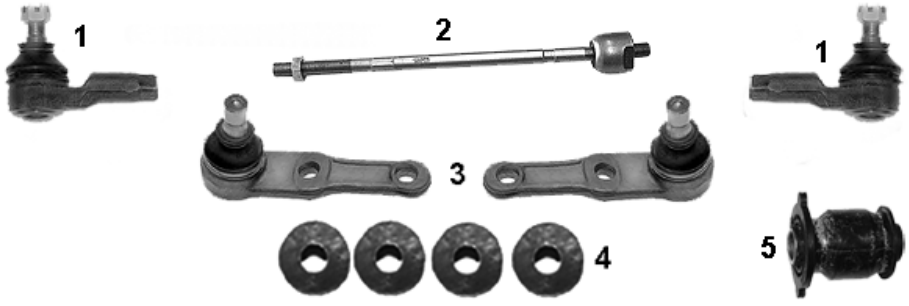

NR	MAPCO	REF									NEW	INFO
1	**19580**	8AB1-32-280	✓		✓	✓			✓	✓		M12x1,25RHT
2	**19581**	BF67-32-240	✓		✓	✓				✓		
3	**19582**	B092-34-550	✓		✓	✓			✓	✓		
4	**33532/4**		✓		✓	✓			✓	✓		
5	**33541**	B097-34-470A	✓		✓	✓			✓	✓		

MAZDA 323 (BG) 09/89→07/94

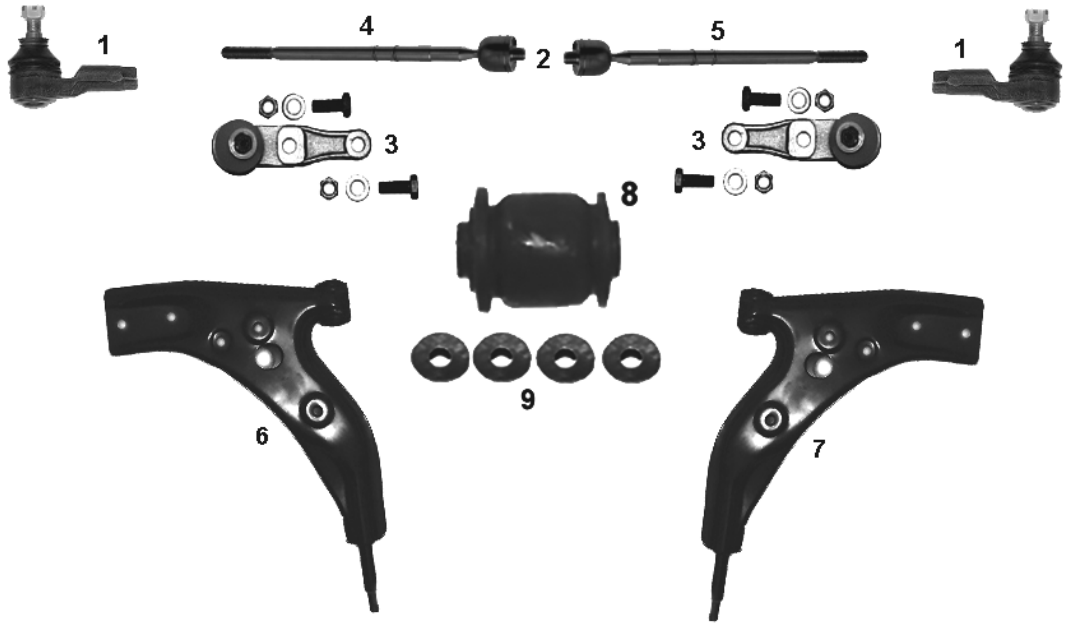

NR	MAPCO	REF			←	→	↑	↓			NEW	INFO
1	**19583**	8AB2-32-280	✓		✓	✓			✓	✓		M12,5x1,25 RHT
2	**19584**	B455-32-24X	✓		✓	✓				✓		340,0mm
3	**19585**	B455-34-550	✓		✓	✓			✓	✓		**Ø 16,0mm**
4	**19594**	B456-32-25X	✓		✓				✓			
5	**59231**	B456-32-24X	✓			✓			✓			
6	**49230**	BR70-34-350B	✓		✓			✓	✓	✓		
7	**49231**	BR70-34-300B	✓			✓		✓	✓	✓		
8	**33533**	B210-34-470	✓		✓	✓		✓	✓	✓		
9	**33532/4**		✓		✓	✓			✓	✓		

MAZDA 323 (BA) 08/94→09/98

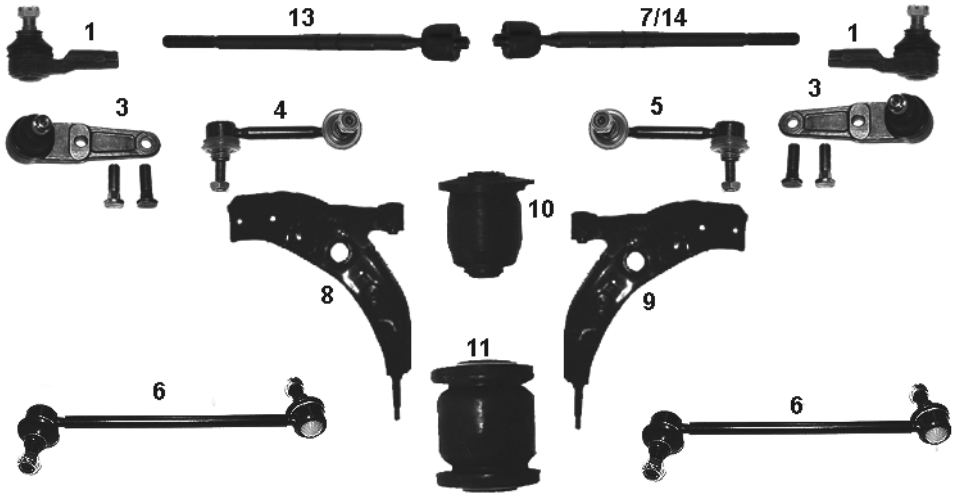

NR	MAPCO	REF			←	→	↑	↓			NEW	INFO
1	**19583**	B21H-32-280	✓		✓	✓			✓	✓		M12,5x1,25 RHT
3	**49589**	BTDA-34-550	✓		✓	✓			✓	✓		
4	**19590HPS**	GA2A-34-170	✓		✓				✓	✓		
5	**19591HPS**	GA2A-34-150	✓			✓			✓	✓		
6	**19593HPS**	BC1D-28-170		✓					✓	✓		
7	**59711**	B21H-32-25X	✓		✓	✓			✓			M12x1,25RHT / ✓1.5 16V
8	**49580**	B01A-34-350E	✓		✓				✓	✓		✓1.7D - 2.0
9	**49581**	B01A-34-300E	✓			✓			✓	✓		✓1.7D - 2.0
10	**33535**	BC1D-34-470	✓		✓	✓			✓	✓		
11	**33540**	LB41-34-460	✓		✓	✓			✓	✓		
13	**49586**	E016-32-25X	✓		✓	✓			✓			M12x1,25RHT / 310,0mm / ✓1.8 16V
14	**59232**	E016-32-250	✓		✓	✓				✓		335,0mm

MAZDA 323 VI (BJ) 09/98→05/04



NR	MAPCO	REF			←	→	↑	↓			NEW	INFO
1	**49584**	B25D-34-350B	✓		✓			✓	✓	✓		
2	**49585**	B25D-34-300B	✓			✓		✓	✓	✓		
3	**33538**	B25D-34-460	✓		✓	✓			✓	✓		
4	**33539**	B25D-34-470	✓		✓	✓			✓	✓		
5	**49590HPS**	B26R-34-170	✓		✓	✓			✓	✓		**190,0 mm / Chassis → JMZBJ304194**
6	**59388HPS**	LC62-34-170B	✓		✓	✓			✓	✓		**265,0 mm**
7	**33532/4**		✓		✓	✓			✓	✓		
8	**49591HPS**	B26R-28-170		✓	✓	✓			✓	✓		**190,0 mm / →10/00**
9	**51332HPS**	B30H-28-170B		✓	✓	✓			✓	✓	✓	**160,0 mm / 10/00→**

MAZDA 3 (BK__) 10/03→

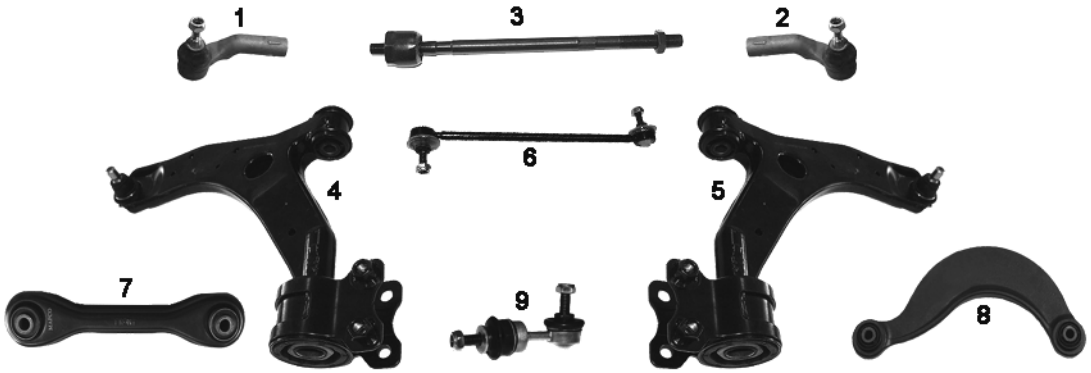

NR	MAPCO	REF			←	→	↑	↓			NEW	INFO
1	**51342**	BP4L-32-290	✓		✓				✓	✓	✓	M17x1,5
2	**51343**	BP4L-32-280	✓			✓			✓	✓	✓	M17x1,5
3	**51344**	BP4L-32-240	✓		✓	✓			✓	✓	✓	M17x1,5
4	**51330**	B32H-34-350	✓		✓			✓	✓	✓		
5	**51331**	B32H-34-300	✓			✓		✓	✓	✓		
6	**59664HPS**	BP4K-34-170C	✓		✓	✓			✓	✓		298,0 mm
7	**59668**	C236-28-500A		✓	✓	✓			✓	✓		
8	**59646**	BP4K-28-C10B		✓	✓	✓			✓	✓		
9	**51610**	BP4K-28-170C		✓	✓	✓			✓	✓	✓	76,5 mm

MAZDA 5 (CR19) 03/05→



NR	MAPCO	REF								NEW	INFO
1	**51342**	BP4L-32-290	✓		✓				✓	✓	✓	M17x1,5
2	**51343**	BP4L-32-280	✓			✓			✓	✓	✓	M17x1,5
3	**51344**	BP4L-32-240	✓		✓	✓			✓	✓	✓	M17x1,5
4	**59664HPS**	BP4K-34-170C	✓		✓	✓			✓	✓		298,0 mm
5	**59668**	C236-28-500A		✓	✓	✓			✓	✓		
6	**59646**	BP4K-28-C10B		✓	✓	✓			✓	✓		
7	**51610**	BP4K-28-170C		✓	✓	✓			✓	✓	✓	76,5 mm

MAZDA 626 III GV 09/87→09/97
MAZDA 626 III GD 07/87→05/92



NR	MAPCO	REF								NEW	INFO
1	**19595**	8AH1-32-280	✓		✓	✓			✓	✓		Chassis → 561648 / M12x1,25RHT
2	**19588**	GJ22-32-240	✓		✓	✓			✓	✓		
3	**19587**	G030-99-356	✓		✓	✓			✓	✓		**Ø 18,0mm**
4	**19590HPS**	GA2A-34-170	✓		✓				✓	✓		
5	**19591HPS**	GA2A-34-150	✓			✓			✓	✓		
6	**19592HPS**	GA2C-28-170B		✓	✓	✓			✓	✓		
7	**33532/4**		✓		✓	✓			✓	✓		
8	**59350**	8AG3-32-280	✓		✓	✓			✓	✓		Chassis 561649→
9	**51538**	GF22-34-350A	✓		✓				✓	✓		
10	**51539**	GJ83-34-300A	✓			✓			✓	✓		

MAZDA 626 IV GE

08/91→ 04/97

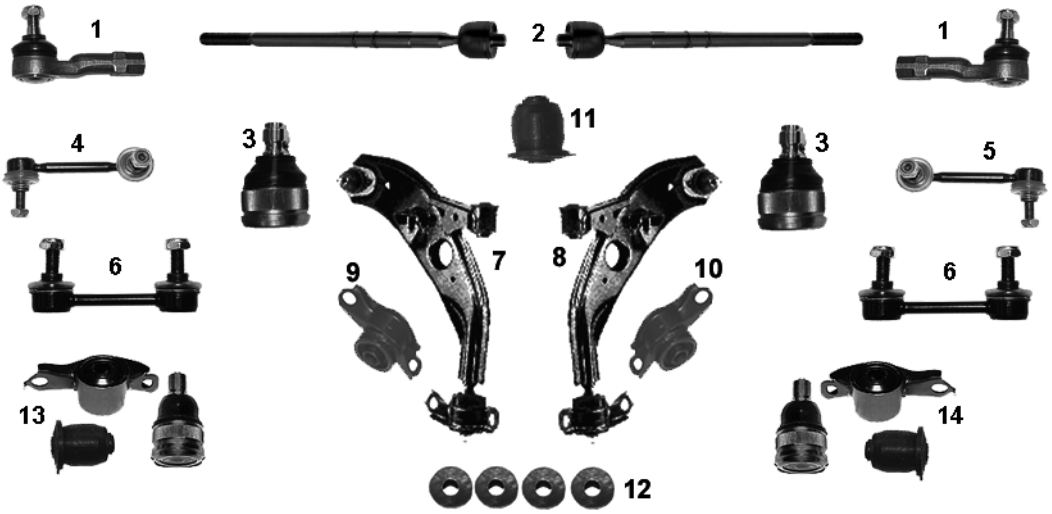

NR	MAPCO	REF								NEW	INFO
1	**19589**	8AG4-32-280	✓		✓	✓			✓	✓		M14x1,5RHT
2	**19599**	GA2A-32-250	✓		✓	✓			✓	✓		M14x1,5RHT
3	**19587**	G030-99-356	✓		✓	✓			✓	✓		**Ø 18,0mm**
4	**19590HPS**	GA2A-34170	✓		✓				✓	✓		
5	**19591HPS**	GA2A-34150	✓			✓			✓	✓		
6	**19592HPS**	GA2B-28-170		✓	✓	✓			✓	✓		
7	**49582**	GA6B-34-350	✓		✓				✓	✓		
8	**49583**	GA6B-34-300	✓			✓			✓	✓		
9	**33530**	GA2A-34-46YE	✓		✓				✓	✓		
10	**33531**	GA2A-34-46XE	✓			✓			✓	✓		
11	**33534**	GA2B-34-470	✓		✓	✓			✓	✓		
12	**33532/4**		✓		✓	✓			✓	✓		
13	**19287**		✓		✓				✓	✓		Kit
14	**19288**		✓			✓			✓	✓		Kit

MAZDA 626 V GF

05/97→ 10/02

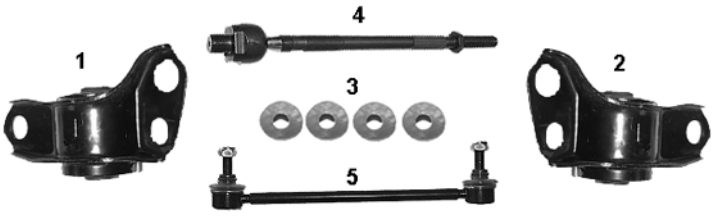

NR	MAPCO	REF								NEW	INFO
1	**33536**	GD7A-34-46X	✓		✓				✓	✓		
2	**33537**	GD7A-34-46Y	✓			✓			✓	✓		
3	**33532/4**		✓		✓	✓			✓	✓		
4	**59712**	GE4T-32-240	✓		✓	✓			✓	✓		
5	**59535HPS**	GE4T-28-170		✓	✓	✓			✓	✓		

MAZDA 6 (GG, GY) 06/02→

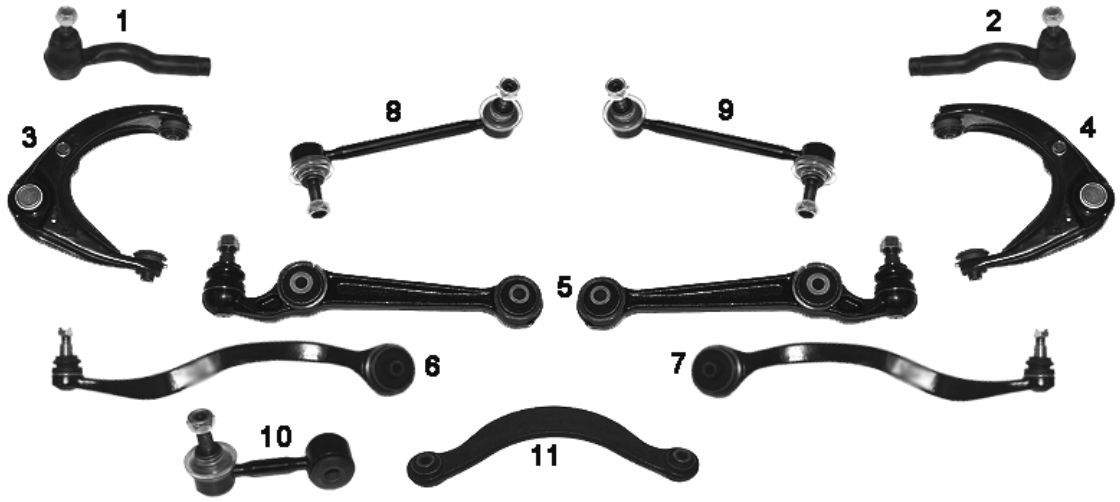

NR	MAPCO	REF								NEW	INFO
1	**51340**	G26A-32-290	✓		✓				✓	✓	✓	M14x1,5
2	**51341**	G26A-32-280	✓			✓			✓	✓	✓	M14x1,5
3	**49235**	GJ6A-37-250B	✓		✓		✓		✓	✓		
4	**49234**	GJ6A-34-200B	✓			✓	✓		✓	✓		
5	**49233**	GJ6A-34-300B	✓		✓	✓		✓	✓	✓		
6	**59368**	GJ6A-34-J50C	✓		✓				✓	✓		**hinten / rear / arrière**
7	**59369**	GJ6A-34-J00C	✓			✓			✓	✓		**hinten / rear / arrière**
8	**51334HPS**	GJ6A-34-170A	✓		✓				✓	✓		155,0 mm
9	**51335HPS**	GJ6A-34-150A	✓			✓			✓	✓		155,0 mm
10	**51336**	GJ6A-28-170		✓	✓	✓			✓	✓		77,0 mm
11	**59370**	GJ6A-28-C10A		✓	✓	✓			✓	✓		

MAZDA MP-V I 03/95→ 09/99

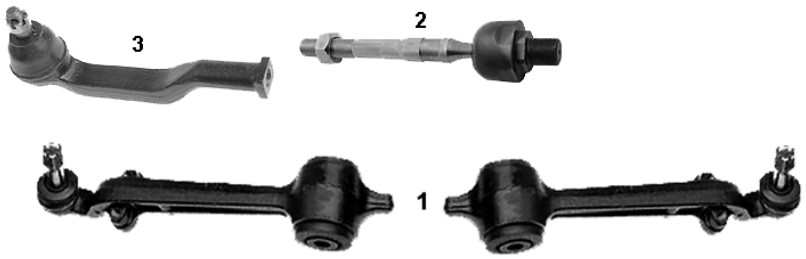

NR	MAPCO	REF								NEW	INFO
1	**49236**	LB82-34-300	✓		✓	✓		✓	✓	✓		
2	**59349**	LA01-32-115	✓		✓	✓			✓	✓		M17x1RHT
3	**59338**	8AL1-32-280	✓		✓				✓	✓		M14x1,50RHT

MAZDA MP-V II (LW) 10/99→ 07/02

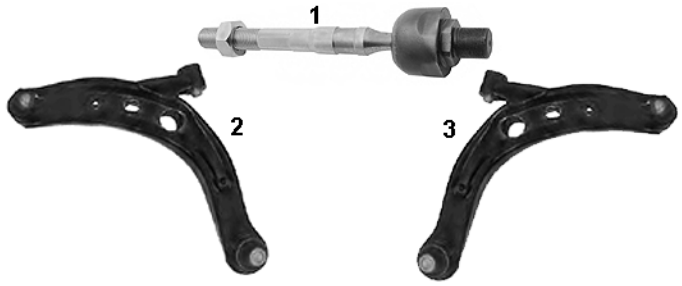

NR	MAPCO	REF			←	→	↑	↓			NEW	INFO
1	**59349**	LA01-32-115	✓		✓	✓			✓	✓		M17x1RHT
2	**59394**	LC62-34-350C	✓		✓			✓	✓	✓		
3	**59395**	LC62-34-300C	✓			✓		✓	✓	✓		

MAZDA MX-3 (EC) 01/94→

NR	MAPCO	REF			←	→	↑	↓			NEW	INFO
1	**59534**	EA01-28-170D		✓	✓	✓			✓	✓		 1

MAZDA MX-5 I (NA) 1.6-1.8 05/90→04/98

NR	MAPCO	REF			←	→	↑	↓			NEW	INFO
1	**59713**	NA01-32-240	✓		✓	✓			✓	✓		 1

MAZDA MX-5 II (NB) 1.6 16V, 1.8 16V 05/98 →
MAZDA MX-5 II 1.9 16V 11/00 →

NR	MAPCO	REF			←	→	↑	↓			NEW	INFO
1	**49232**	NA01-34-170	✓		✓	✓			✓	✓		 1

MAZDA MX-6 (GE6) 02/92 →

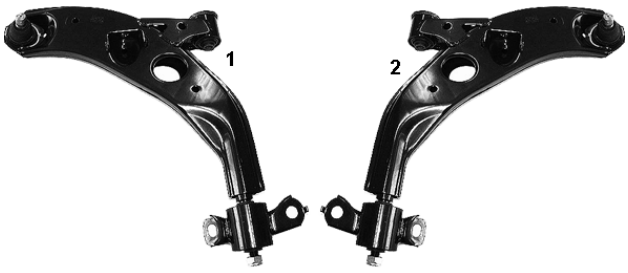

NR	MAPCO	REF			←	→	↑	↓			NEW	INFO
1	**49582**	GA2B-34-350A	✓		✓			✓	✓	✓		
2	**49583**	GA6B-34-300A	✓			✓		✓	✓	✓		

MAZDA PREMACY (CP) 1.9
MAZDA PREMACY (CP) 2.0TD

07/99→
10/99→07/00

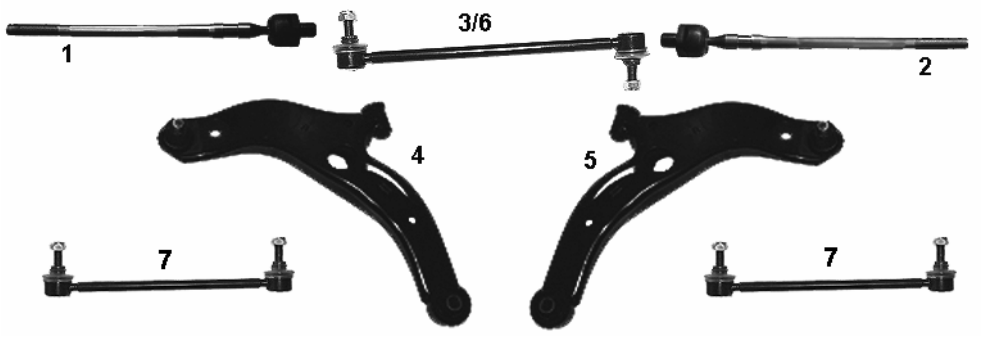

NR	MAPCO	REF									NEW	INFO
1	**59715**	B25D-32-240	✓		✓				✓	✓		
2	**59714**	B25D-32-250	✓			✓			✓	✓		
3	**49590HPS**	B26R-34-170	✓		✓	✓			✓	✓		**Chassis → 151177, 190,0 mm**
4	**59389**	C100-34-350B	✓		✓				✓	✓		
5	**59390**	C100-34-300B	✓			✓			✓	✓		
6	**59388HPS**	LC62-34-170B	✓		✓	✓			✓	✓		**Chassis 151177→, 265,0 mm**
7	**51332HPS**	B30H-28-170B		✓	✓	✓			✓	✓	✓	**160,0 mm / 10/00→**

MAZDA XEDOS 9 (TA)

07/93→07/00

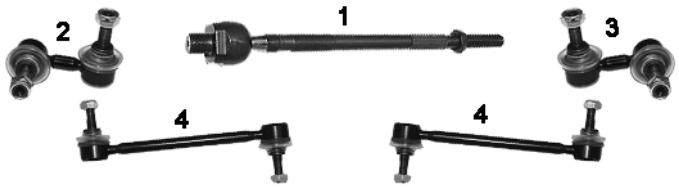

NR	MAPCO	REF									NEW	INFO
1	**59716**	T001-32-240	✓		✓	✓			✓	✓		M13x1,5RHT
2	**51337**	T001-34-17XA	✓		✓				✓	✓	✓	
3	**51338**	T001-34-170A	✓			✓			✓	✓	✓	
4	**51339HPS**	T001-28-170A		✓	✓	✓			✓	✓	✓	

MERCEDES-BENZ

MERCEDES-BENZ A-Klasse (W168) 07/97→08/04

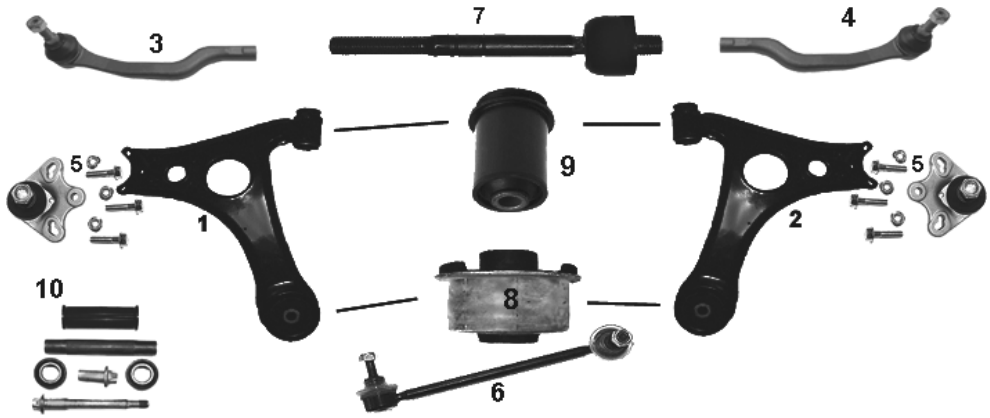

NR	MAPCO	REF			←	→	↑	↓			NEW	INFO
1	**49814/1**	1683300827	✓		✓				✓	✓		
2	**49814/2**	1683300927	✓			✓			✓	✓		
3	**49823**	1683301135	✓		✓				✓	✓		
4	**49824**	1683301235	✓			✓			✓	✓		
5	**49825**	1683330127	✓		✓	✓			✓	✓		
6	**49834HPS**	1683200789	✓		✓	✓			✓	✓		
7	**49894**	1683301335	✓		✓	✓			✓	✓		✓1.6, 1.7, 1.9
8	**33943**	1683330614	✓		✓	✓			✓	✓		
9	**33944**	1683330714	✓		✓	✓			✓	✓		
10	**59846**			✓	✓	✓			✓	✓		

MERCEDES-BENZ A-Klasse (W169) 09/04 →



NR	MAPCO	REF			←	→	↑	↓			NEW	INFO
1	**52806HPS**	1693200989	✓		✓	✓			✓	✓		244,0 mm M20x1,5LHT

MERCEDES-BENZ B-Klasse (W245) 03/05 →



NR	MAPCO	REF			←	→	↑	↓			NEW	INFO
1	**52806HPS**	1693200989	✓		✓	✓			✓	✓		244,0 mm M20x1,5LHT

MERCEDES-BENZ	C123 230–280 (C/CE) T123 200–230–240–250–280–300 (T/TD/TE) W123 200–220–230–240–250–280–300 D/E	01/76→10/84

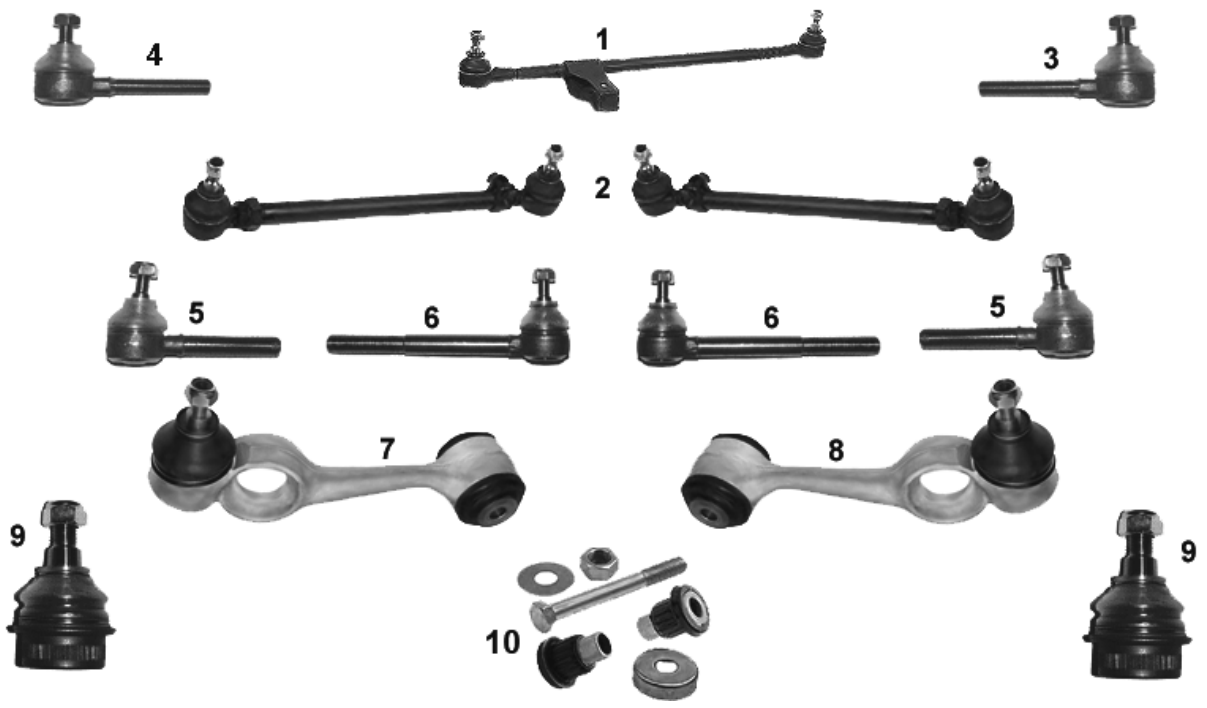

NR	MAPCO	REF								NEW	INFO
1	**19838**	1234601505	✓		✓	✓			✓	✓		innen/inner
2	**19829**	1233301803	✓		✓	✓			✓	✓		
3	**19836**	0003385010	✓		✓	✓			✓	✓		M14x1,5LHT
4	**19846**	0003385110	✓		✓	✓			✓	✓		M14x1,5RHT
5	**19841**	1233380210	✓		✓	✓			✓	✓		M16x1,5LHT
6	**19840**	1233380110	✓		✓	✓			✓	✓		M16x1,5RHT
7	**19842**	1233305207	✓		✓				✓	✓		
8	**19843**	1233305307	✓			✓			✓	✓		
9	**19844**	1163330927	✓		✓	✓			✓	✓		
10	**33972**	1234600050	✓		✓	✓			✓	✓		

MERCEDES-BENZ		
	C124 200 – 230 – 300 (CE)	1987→06/95
	T124 200 – 230 – 250 – 300 (TD-TE)	09/85→06/95
	W124 200 – 230 – 250 – 260 – 300 (D/E)	11/84→06/95

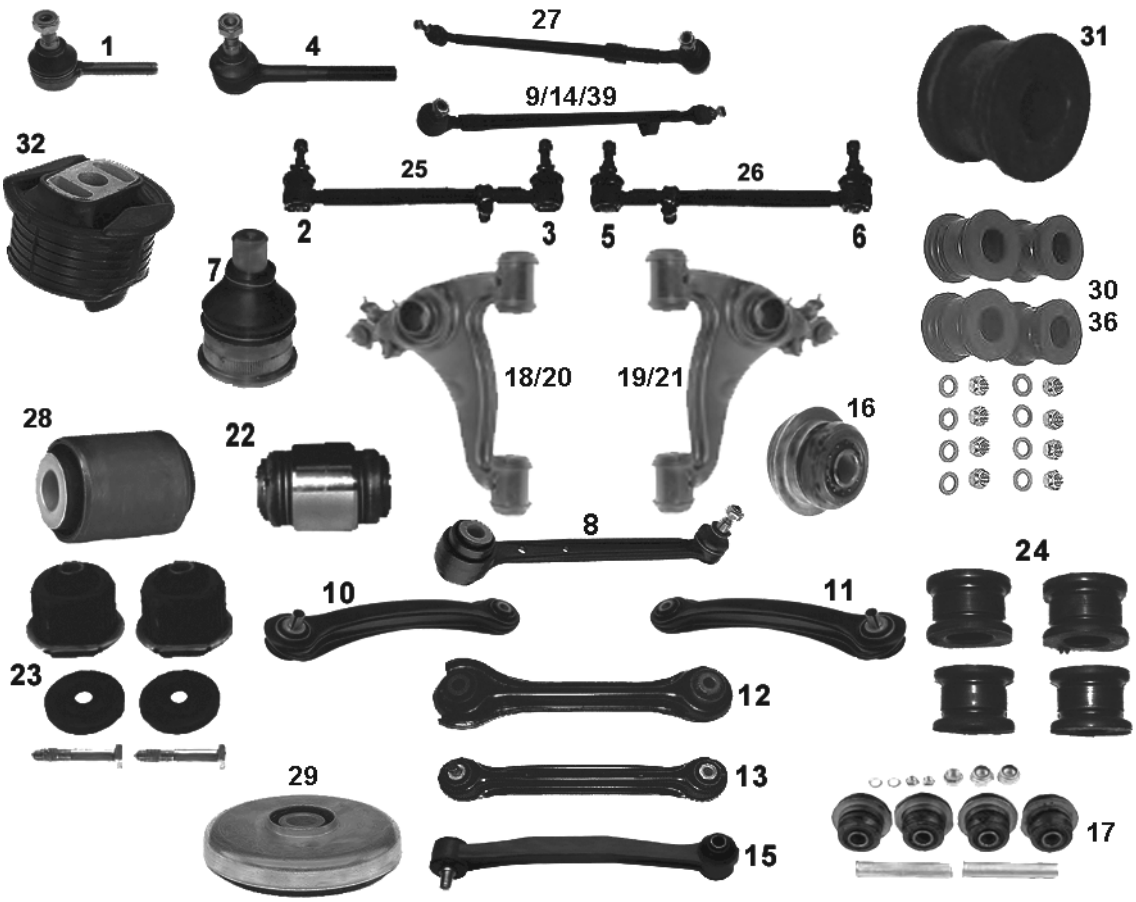

NR	MAPCO	REF								NEW	INFO
1	**59866**	0013305235	✓		✓	✓			✓	✓		M14x1,5RHT innen/inner
2	**19846**	0003385110	✓		✓	✓			✓	✓		M14x1,5RHT
3	**19847**	0003385610	✓		✓	✓			✓	✓		M14x1,5LHT
4	**59867**	0013305335	✓		✓	✓			✓	✓		M14x1,5LHT aussen/outside
5	**19848**	0003385410	✓		✓	✓			✓	✓		M14x1,5RHT
6	**19849**	0003385910	✓		✓	✓			✓	✓		M14x1,5LHT
7	**19828**	1243330327	✓		✓	✓			✓	✓		
8	**19832**	2013503253		✓	✓	✓			✓	✓		
9	**19845**	1244600805		✓					✓	✓		Chassis →1BO221104 / 2BO051198
10	**19817**	1243507606		✓	✓				✓	✓		
11	**19818**	1243507706		✓		✓			✓	✓		
12	**19820**	2013505606		✓	✓	✓			✓	✓		
13	**19819**	1243500129		✓	✓	✓			✓	✓		
14	**49813**	1244601205	✓		✓	✓			✓	✓		
15	**19839**	1243200289	✓		✓	✓			✓	✓		
16	**33841**	2013335114	✓		✓	✓			✓	✓		
17	**33841/4**	1243300575	✓		✓	✓			✓	✓		
18	**49817**	1243303007	✓		✓			✓	✓	✓		Chassis →124028
19	**49818**	1243303107	✓			✓		✓	✓	✓		Chassis →124028
20	**49828**	1243303407	✓		✓			✓	✓	✓		Chassis 124029→
21	**49829**	1243303507	✓			✓		✓	✓	✓		Chassis 124029→
22	**33870**	2013520027	✓		✓	✓			✓	✓		

MERCEDES-BENZ	C124 200 – 230 – 300 (CE) T124 200 – 230 – 250 – 300 (TD-TE) W124 200 – 230 – 250 – 260 – 300 (D/E)	Fortsetzung / continued	1987→06/95 09/85→06/95 11/84→06/95



NR	MAPCO	REF								NEW	INFO
23	33910	1243506408		✓	✓	✓			✓	✓		
24	33889/4	1243200447	✓		✓	✓			✓	✓		
25	19830/1	1243300803	✓		✓	✓			✓	✓		
26	19831/1	1243300903	✓		✓	✓			✓	✓		
27	59800	1244601405	✓		✓	✓			✓	✓		
28	33973	2013528765		✓	✓	✓			✓	✓		(✓ 19832)
29	36899	1243511342		✓	✓	✓			✓	✓		
30	33868	2013200047	✓		✓	✓			✓	✓		
31	33845	1243233785	✓		✓	✓			✓	✓		24mm
32	33942	1243510242		✓	✓	✓			✓	✓		
33	33865	1243527765		✓	✓	✓			✓	✓		
34	59830			✓	✓	✓			✓	✓		
35	59831	1244630066	✓		✓	✓			✓	✓		
36	36913	1243201947	✓		✓	✓			✓	✓		
37	33889/2	1243232385	✓		✓	✓			✓	✓		Ø innen/inner 18,5 mm
38	33889/3	1243231785	✓		✓	✓			✓	✓		Ø innen/inner 24,0 mm
39	59830/1			✓	✓	✓			✓	✓		
40	95830			✓	✓	✓			✓	✓		MS
41	95831			✓	✓	✓			✓	✓		MS
42	95832			✓	✓	✓			✓	✓		MS

VERGLEICHSNUMMERN DIENEN NUR ZUR BESSEREN IDENTIFIKATION UND DÜRFEN NICHT AUF RECHNUNGEN ERSCHEINEN!!!
Reference numbers are used for better identification only !
Références d'origine pour meilleure identification seulement !

MERCEDES-BENZ (W201) 190D/E 11/82→06/93

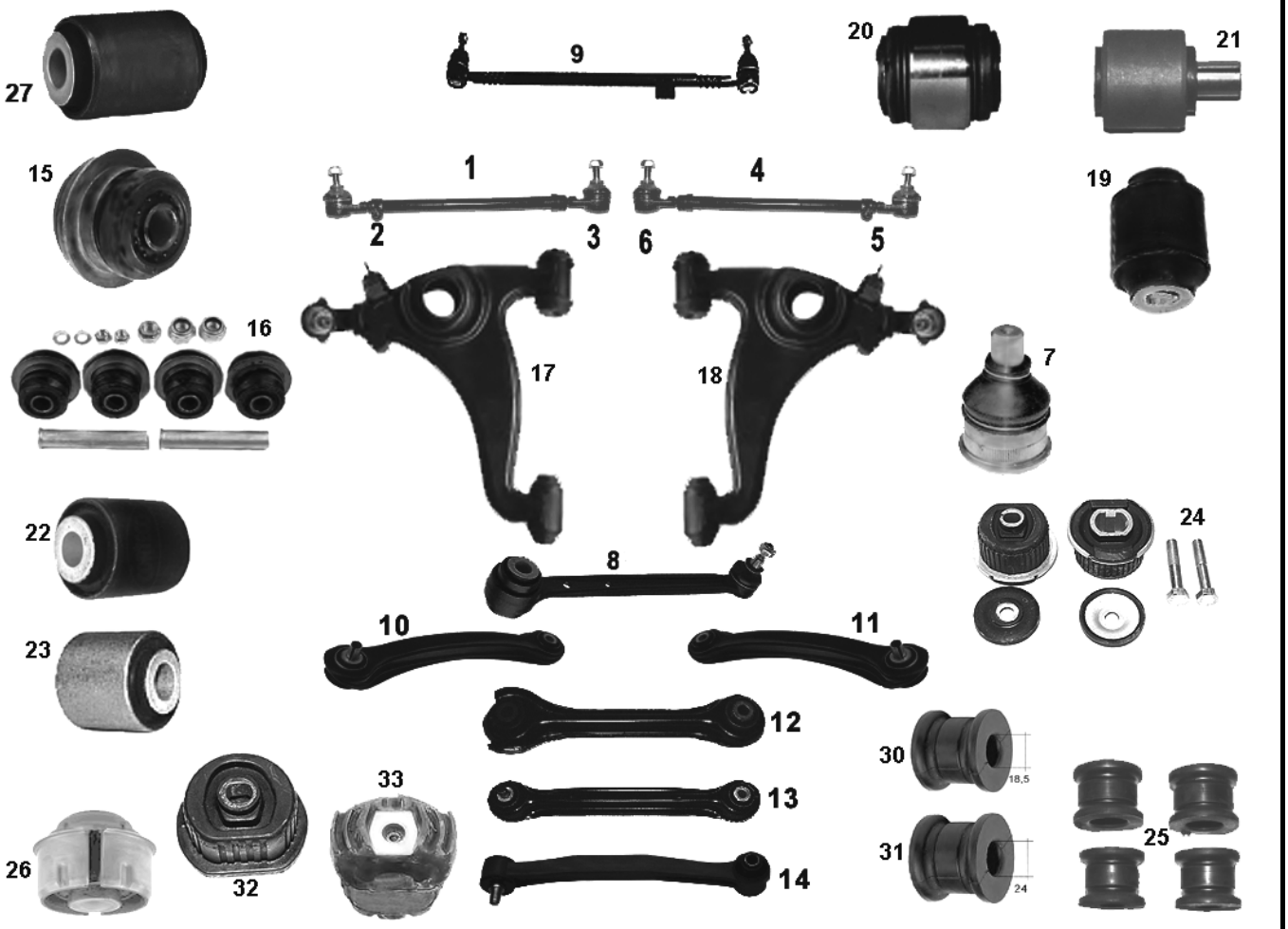

NR	MAPCO	REF								NEW	INFO
1	**19822**	2013300703	✓		✓	✓			✓	✓		
2	**19824**	0003386010	✓		✓	✓			✓	✓		M12x1,5LHT
3	**19823**	0003386110	✓		✓	✓			✓	✓		M12x1,5RHT
4	**19825**	2013301603	✓		✓	✓			✓	✓		
5	**19827**	0003386210	✓		✓	✓			✓	✓		M12x1,5LHT
6	**19826**	0003386310	✓		✓	✓			✓	✓		M12x1,5RHT
7	**19828**	1243330327	✓		✓	✓			✓	✓		
8	**19832**	2013503253		✓	✓	✓			✓	✓		
9	**19821**	2014601505	✓		✓	✓			✓	✓		
10	**19817**	1243507606		✓	✓				✓	✓		
11	**19818**	2103502506		✓		✓			✓	✓		
12	**19820**	2013505606		✓	✓	✓			✓	✓		
13	**19819**	1243500129		✓	✓	✓			✓	✓		
14	**19839**	1243200289		✓	✓	✓			✓	✓		
15	**33841**	2013335114	✓		✓	✓			✓	✓		
16	**33841/4**	1243300575	✓		✓	✓			✓	✓		
17	**49815**	1243303807	✓		✓				✓	✓		
18	**49816**	1243303907	✓			✓			✓	✓		
19	**33874**	2013523665	✓		✓	✓			✓	✓		
20	**33870**	2013520027	✓		✓	✓			✓	✓		
21	**33838**	1243529065	✓		✓	✓			✓	✓		Ø 10 mm
22	**33836**	1243500575		✓	✓	✓			✓	✓		

MERCEDES-BENZ (W201) 190D/E — Fortsetzung / continued — 11/82 →06/93

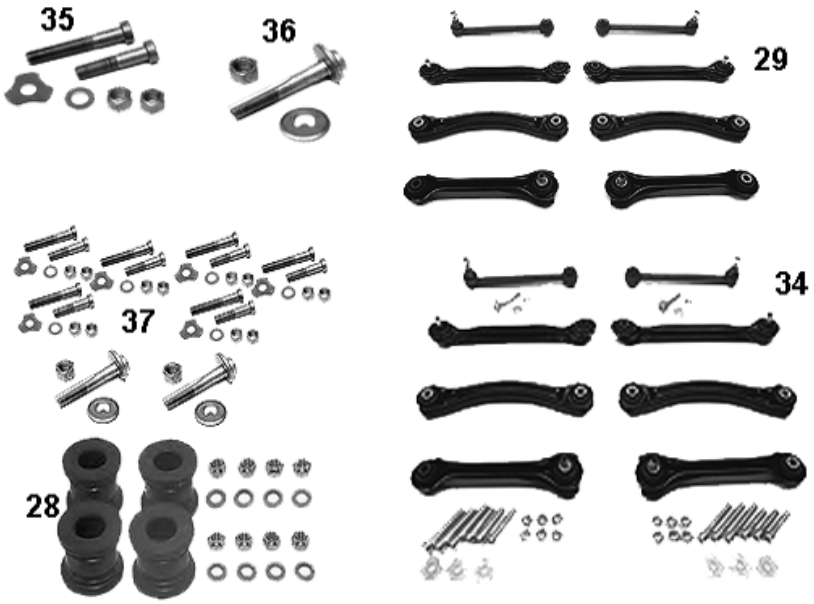

NR	MAPCO	REF								NEW	INFO
23	33837	1243528665		✓	✓	✓			✓	✓		(✓19820)
24	33910	1243506408		✓	✓	✓			✓	✓		
25	33889/4	1243200447	✓		✓	✓			✓	✓		
26	33936	2013334514	✓		✓	✓			✓	✓		Ø 14,3 mm
27	33973	2013528765	✓		✓	✓			✓	✓		
28	33868	2013200047	✓		✓	✓			✓	✓		✓2.0, D2.0,D2.5, E2.0, E2.3
29	59830			✓	✓	✓			✓	✓		
30	33889/2	1243232385	✓		✓	✓			✓	✓		Ø innen/inner 18,5 mm
31	33889/3	1243231785	✓		✓	✓			✓	✓		Ø innen/inner 24,0 mm
32	36924	2013512742		✓	✓	✓			✓	✓		
33	33978	2023510842		✓	✓	✓			✓	✓		
34	59830/1			✓	✓	✓			✓	✓		
35	95830			✓	✓	✓			✓	✓		MS
36	95831			✓	✓	✓			✓	✓		MS
37	95832			✓	✓	✓			✓	✓		MS

MERCEDES-BENZ W202 C180- C200 - C220 - C280 06/93→05/00
MERCEDES-BENZ W202 C200D - C220D - C250D 06/93→05/00

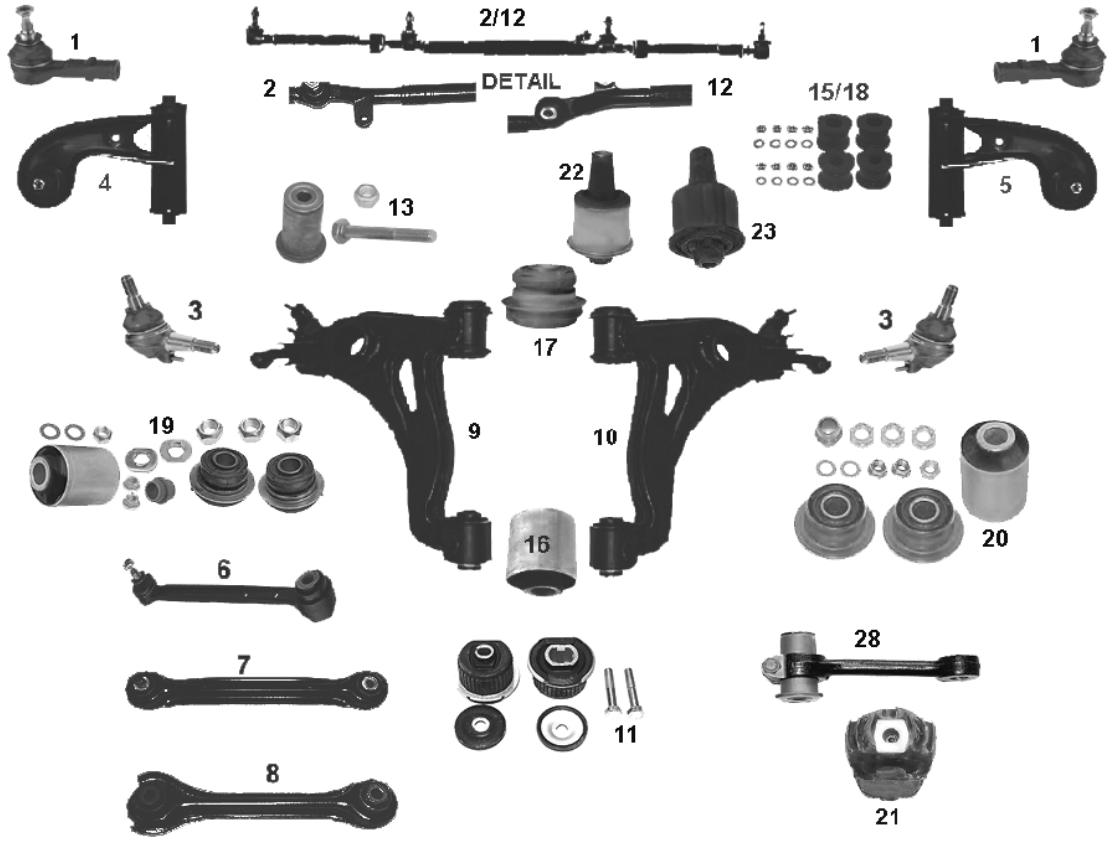

NR	MAPCO	REF								NEW	INFO
1	**49800**	0013307435	✓		✓	✓			✓	✓		M12x1,5RHT
2	**49801**	2024600405	✓		✓	✓			✓	✓		Rohr Ø:**28mm**
3	**49802**	2023330027	✓		✓	✓			✓	✓		
4	**49803**	2103308707	✓		✓		✓		✓	✓		
5	**49804**	2103308807	✓			✓	✓		✓	✓		
6	**19832**	2013503253		✓	✓	✓			✓	✓		
7	**19819**	1243500129		✓	✓	✓			✓	✓		
8	**19820**	2013505606		✓	✓	✓			✓	✓		
9	**49821**	2023302607	✓		✓			✓	✓	✓		
10	**49822**	2023302707	✓			✓		✓	✓	✓		
11	**33910**	1243506408		✓	✓	✓			✓	✓		
12	**59862**	2024600505	✓		✓	✓			✓	✓		Rohr Ø:**28mm**
13	**33974**	2024600319	✓		✓	✓			✓	✓		
14	**59830**			✓	✓	✓			✓	✓		
15	**36908**	1243200147	✓		✓	✓			✓	✓		
16	**36911**	2023336414	✓		✓	✓		✓	✓	✓		
17	**36912**	2023336714	✓		✓	✓		✓	✓	✓		
18	**36913**	1243201947	✓		✓	✓			✓	✓		
19	**36916**	2023300075	✓		✓	✓			✓	✓		Chassis ->A443812, ->F 500865
20	**36917**	1703300075	✓		✓	✓			✓	✓		Chassis A443813->, F 500866->
21	**33978**	2023510842		✓	✓	✓			✓	✓		
22	**33976**	2023336214	✓		✓	✓	✓		✓	✓		
23	**33977**	2023337714	✓		✓	✓	✓		✓	✓		

MERCEDES-BENZ W202 C180- C200 - C220 - C280 — 06/93→05/00
MERCEDES-BENZ W202 C200D - C220D - C250D — 06/93→05/00

Fortsetzung / continued

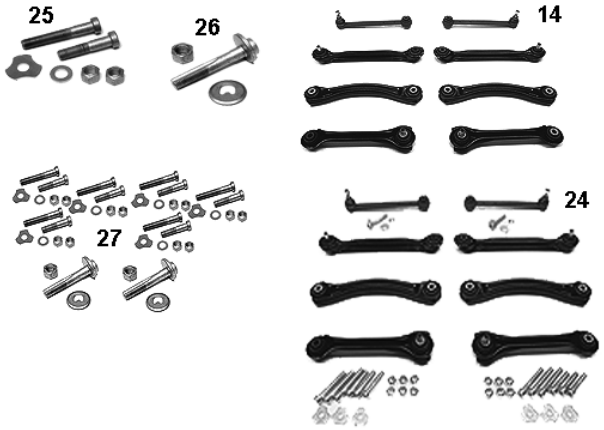

NR	MAPCO	REF								NEW	INFO
24	59830/1			✓	✓	✓			✓	✓	
25	95830			✓	✓	✓			✓	✓	MS
26	95831			✓	✓	✓			✓	✓	MS
27	95832			✓	✓	✓			✓	✓	MS
28	59869	2024600219	✓		✓	✓			✓	✓	

MERCEDES-BENZ C-Klasse W203 — 05/00→
MERCEDES-BENZ C-Klasse C203, T203 — 03/01→
MERCEDES-BENZ CLK C209 — 06/02→

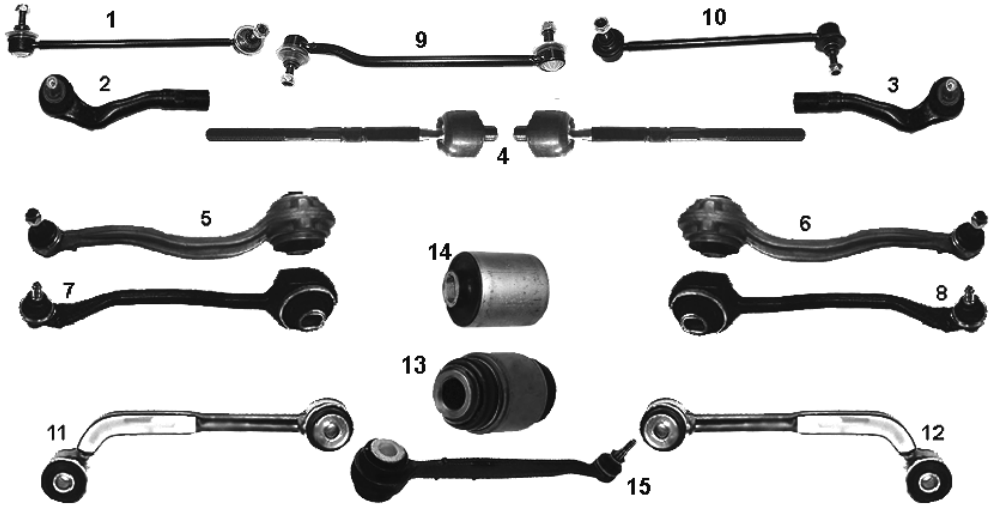

NR	MAPCO	REF								NEW	INFO
1	49895HPS	2033202489	✓		✓	✓			✓	✓	
2	59840	2033302303	✓		✓				✓	✓	18mm M14X1,5RHT
3	59841	2033302403	✓			✓			✓	✓	18mm M14X1,5RHT
4	59844	2203380715	✓		✓	✓			✓	✓	
5	59885	2033301711	✓		✓		✓		✓	✓	Aluminium
6	59884	2033301611	✓			✓	✓		✓	✓	Aluminium
7	59881	2033301911	✓		✓			✓	✓	✓	
8	59882	2033302011	✓			✓		✓	✓	✓	
9	59861HPS	2033201889	✓		✓	✓			✓	✓	✓ 4 matic
10	59857HPS	2033202189	✓		✓	✓			✓	✓	✓
11	59859	2033200789		✓	✓				✓	✓	
12	59860	2033200889		✓		✓			✓	✓	
13	59864	2203520227		✓	✓	✓			✓	✓	
14	36987	2033331014	✓		✓	✓		✓	✓	✓	
15	51851	2033500353		✓	✓	✓			✓	✓	

MERCEDES-BENZ E- KLASSE T- Model (S210) 1996→03/03

NR	MAPCO	REF										NEW	INFO
1	**59847HPS**	1243200489		✓	✓	✓			✓	✓			200,0 mm  1

MERCEDES-BENZ E- KLASSE (W210) 1995→03/02

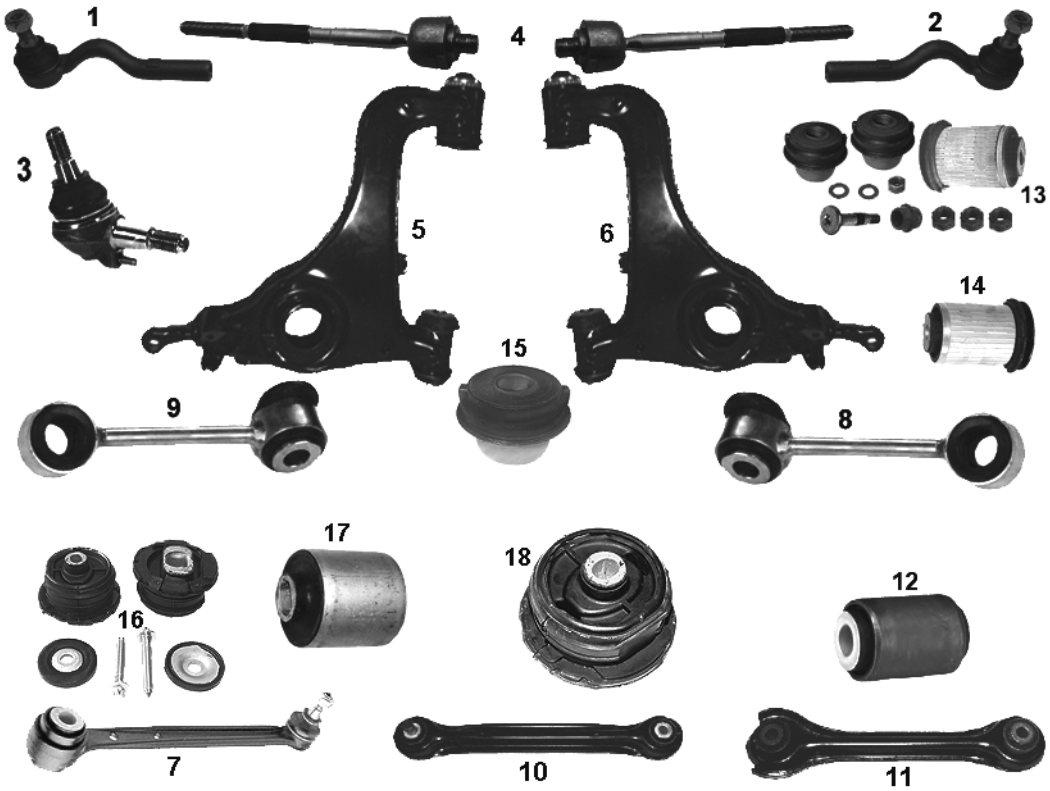

NR	MAPCO	REF										NEW	INFO
1	**49805**	2103380515	✓		✓	✓			✓	✓			M14x1,5RHT
2	**49806**	2103380615	✓		✓				✓	✓			M14x1,5RHT
3	**49802**	2103330427	✓			✓			✓	✓			
4	**49807**	2103380415	✓		✓	✓			✓	✓			M14x1,5RHT
5	**49808**	2103306107	✓		✓				✓	✓			
6	**49809**	2103306207	✓			✓			✓	✓			
7	**19832**	2103500953		✓	✓	✓			✓	✓			
8	**49811HPS**	2103203789	✓			✓			✓	✓			
9	**49812HPS**	2103203689	✓		✓				✓	✓			
10	**19819**	1243500129		✓	✓	✓			✓	✓			
11	**19820**	2013505606		✓	✓	✓			✓	✓			
12	**33973**	2013528765		✓	✓	✓			✓	✓			
13	**36909**	2103300475	✓		✓	✓			✓	✓			
14	**36910**	2103336814	✓		✓	✓			✓	✓			
15	**33979**	2103335514	✓		✓	✓		✓	✓	✓			
16	**36973**	2103505808		✓	✓	✓			✓	✓			
17	**36987**	2033331014	✓		✓	✓		✓	✓	✓			
18	**36796**	2103510842		✓	✓	✓			✓	✓			

MERCEDES-BENZ E- KLASSE W 211/ S 211 03/02→

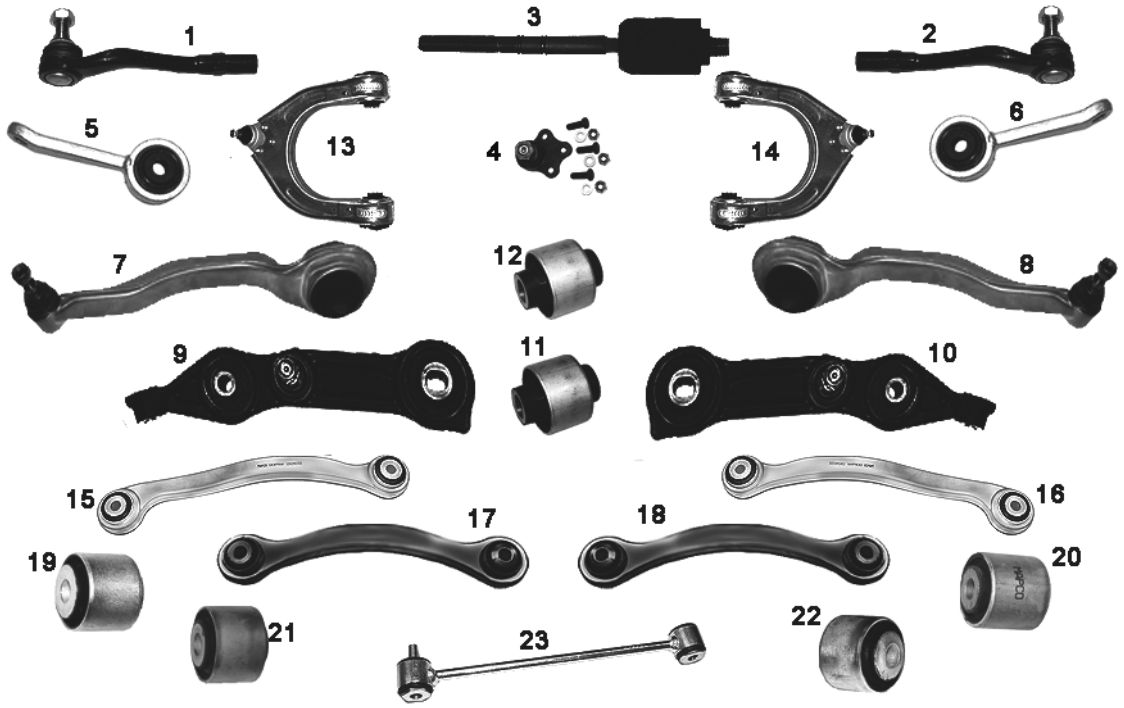

NR	MAPCO	REF								NEW	INFO
1	**51840**	2113302503	✓		✓				✓	✓		M14x1,5RHT
2	**51841**	2113300203	✓			✓			✓	✓		M14x1,5RHT
3	**51839**	2113380015	✓		✓	✓			✓			**✓ 4 matic**
4	**51882**	2113309907	✓		✓	✓	✓		✓	✓	✓	
5	**59833**	2113200989	✓		✓				✓	✓		
6	**59834**	2113201089	✓			✓			✓	✓		
7	**51835**	2303301711	✓		✓				✓	✓		
8	**51836**	2303301811	✓			✓			✓	✓		
9	**51837**	2113308107	✓		✓				✓	✓		hinten / rear
10	**51838**	2113308207	✓			✓			✓	✓		hinten / rear
11	**33883**	2113331114	✓		✓	✓		✓	✓	✓		
12	**36988**	2113332914	✓		✓	✓		✓	✓	✓		
13	**51852**	2113306707	✓		✓			✓	✓	✓		
14	**51853**	2113306807	✓			✓		✓	✓	✓		
15	**51856**	2303502706		✓	✓		✓		✓	✓	✓	
16	**51857**	2303502806		✓		✓	✓		✓	✓	✓	
17	**51858**	2303503506		✓	✓		✓		✓	✓	✓	
18	**51859**	2303503606		✓		✓	✓		✓	✓	✓	
19	**36838**	2303521565		✓	✓	✓	✓		✓	✓		
20	**36989**	2113520865		✓	✓	✓			✓	✓		
21	**37830**	2303521665		✓	✓	✓	✓		✓	✓	✓	
22	**37831**	2303521465		✓	✓	✓	✓		✓	✓	✓	
23	**59858HPS**	2113200889		✓	✓	✓			✓	✓		

MERCEDES-BENZ GL-KLASSE (X164) 09/06→



NR	MAPCO	REF								NEW	INFO
1	**52807**	2513300707	✓		✓		✓		✓	✓	✓	
2	**52808**	2513300807	✓			✓	✓		✓	✓	✓	

MERCEDES-BENZ M-KLASSE (W163) 02/98→06/05

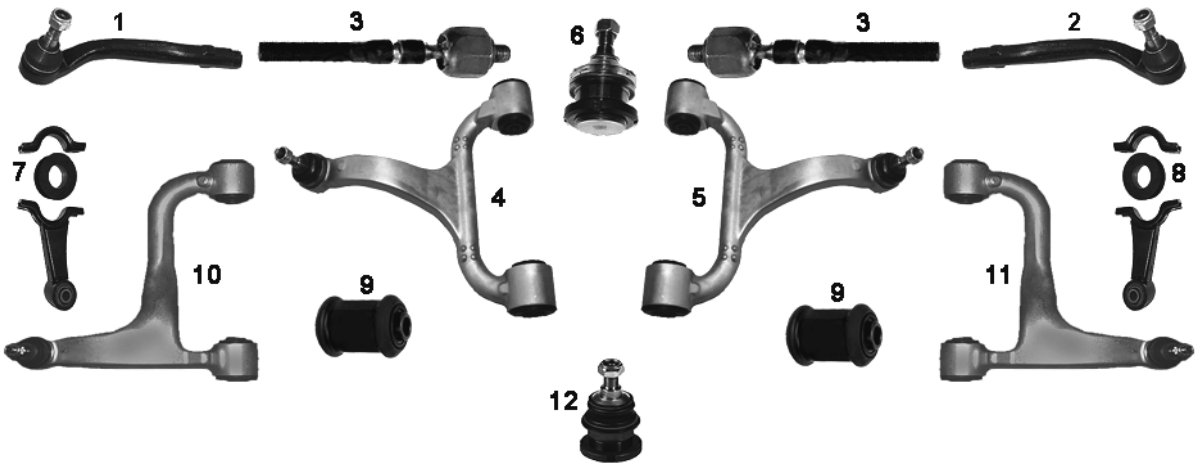

NR	MAPCO	REF									NEW	INFO
1	**59872**	1633380015	✓		✓				✓	✓		
2	**59873**	1633380115	✓			✓			✓	✓		
3	**59899**	1633380215	✓		✓	✓			✓	✓		M16x1,5
4	**51854**	1633330001	✓		✓		✓		✓	✓		
5	**51855**	1633330101	✓			✓	✓		✓	✓		
6	**59832**	1633300035	✓		✓	✓		✓	✓	✓		16,4mm
7	**51844**	1633200190	✓		✓				✓	✓		
8	**51845**	1633200090	✓			✓			✓	✓		
9	**37834**	1633300175	✓	✓	✓	✓	✓		✓	✓		
10	**51842**	1633520001		✓	✓		✓		✓	✓		
11	**51843**	1633520101		✓		✓	✓		✓	✓		
12	**59838**	1633500013		✓	✓	✓			✓	✓		

MERCEDES-BENZ M-KLASSE (W164) 07/05→



NR	MAPCO	REF									NEW	INFO
1	**52807**	2513300707	✓		✓		✓		✓	✓	✓	
2	**52808**	2513300807	✓			✓	✓		✓	✓	✓	

MERCEDES-BENZ R-KLASSE (W251) 01/06→



NR	MAPCO	REF									NEW	INFO
1	**52807**	2513300707	✓		✓		✓		✓	✓	✓	
2	**52808**	2513300807	✓			✓	✓		✓	✓	✓	

MERCEDES-BENZ S-KLASSE (W116) 1972→07/80

NR	MAPCO	REF									NEW	INFO
1	**59897**	0003385510	✓		✓	✓			✓	✓		M14x1,5RHT 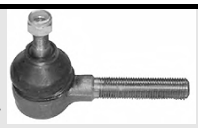 1

MERCEDES-BENZ S-KLASSE (W126) 1985→06/91



NR	MAPCO	REF									NEW	INFO
1	**49898**	1263300303	✓		✓				✓	✓		
2	**49899**	1263300203	✓			✓			✓	✓		
3	**49896**	1263300607	✓		✓		✓		✓	✓		
4	**49897**	1263300707	✓			✓	✓		✓	✓		
5	**33970**	1263333814	✓		✓	✓	✓		✓	✓		
6	**33972**	1264600819	✓		✓	✓			✓	✓		

MERCEDES-BENZ C140 500 - 600 (SEC) 10/92→ 02/99
MERCEDES-BENZ S-KLASSE W140 300 - 400 - 500 - 600 (SE-SEL) 02/91→ 10/98

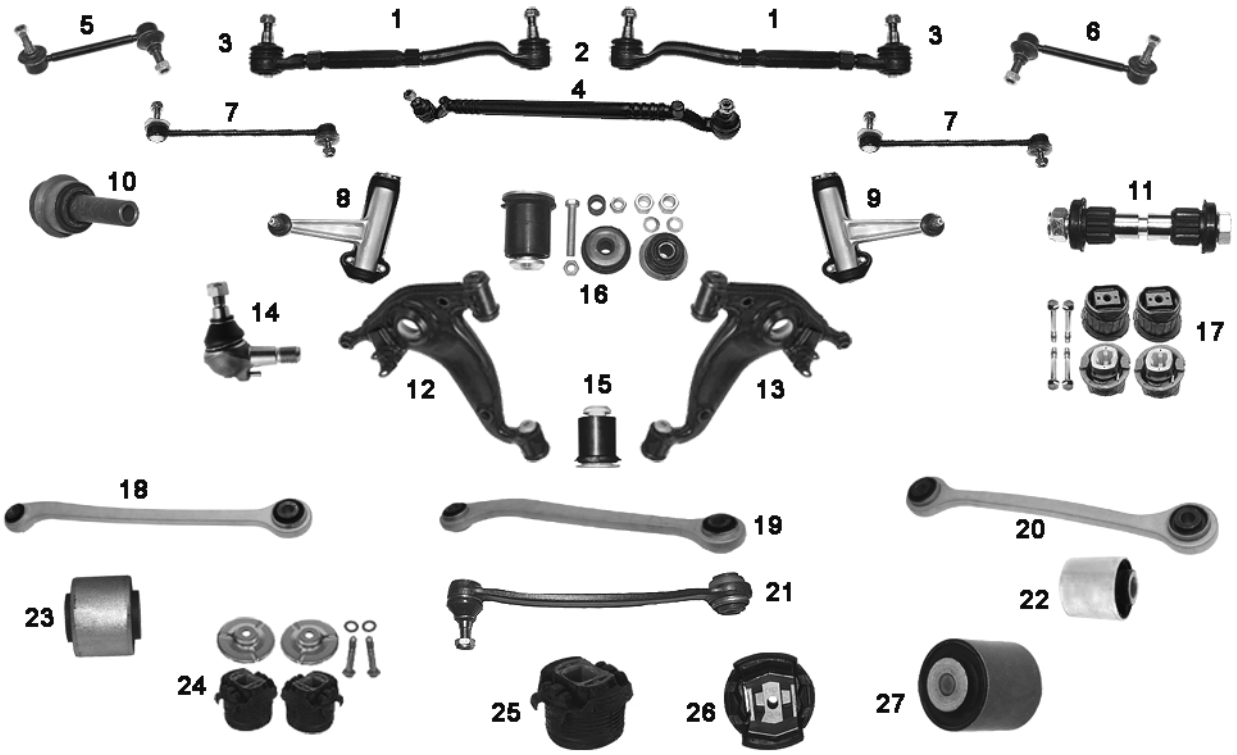

NR	MAPCO	REF								NEW	INFO
1	**19837**	1403300003	✓		✓	✓			✓	✓		
2	**19833**	0013306235	✓		✓	✓			✓	✓		
3	**19834**	0013306335	✓		✓	✓			✓	✓		
4	**49892**	1404600805	✓		✓	✓			✓	✓		
5	**49826**	1403301189	✓		✓				✓	✓		
6	**49827**	1403301289	✓			✓			✓	✓		
7	**59856**	1403201789	✓		✓	✓			✓	✓		
8	**49819**	1403305407	✓		✓		✓		✓	✓		
9	**49820**	1403307707	✓			✓	✓		✓	✓		
10	**36980**	1403331714	✓	✓	✓		✓		✓	✓		
11	**33922**	1404600819	✓		✓	✓			✓	✓		
12	**59836**	1403306407	✓		✓				✓	✓		
13	**59837**	1403306507	✓			✓			✓	✓		
14	**49891**	1403330327	✓		✓	✓		✓	✓	✓		
15	**33971**	1403331814	✓		✓	✓		✓	✓	✓		
16	**33867**	1403306007	✓		✓	✓			✓	✓		
17	**36919**	1403303942	✓		✓	✓			✓	✓		
18	**49888**	1403503406		✓	✓	✓			✓	✓		Aluminium
19	**49889**	1403503506		✓	✓	✓			✓	✓		Aluminium
20	**49890**	1403503606		✓	✓	✓			✓	✓		Aluminium
21	**49893**	1403503053		✓	✓	✓			✓	✓		
22	**37832**	1403524565		✓	✓	✓			✓	✓	✓	
23	**37833**	1403524465		✓	✓	✓			✓	✓	✓	Ø 41,5 mm
24	**36920**	1403508708		✓	✓	✓			✓	✓		
25	**36921**	1403517142		✓	✓	✓			✓	✓		
26	**36922**	1403518142		✓	✓	✓			✓	✓		
27	**36923**	1403528665		✓	✓	✓			✓	✓		

MERCEDES-BENZ S-KLASSE (W220) 10/98→08/05

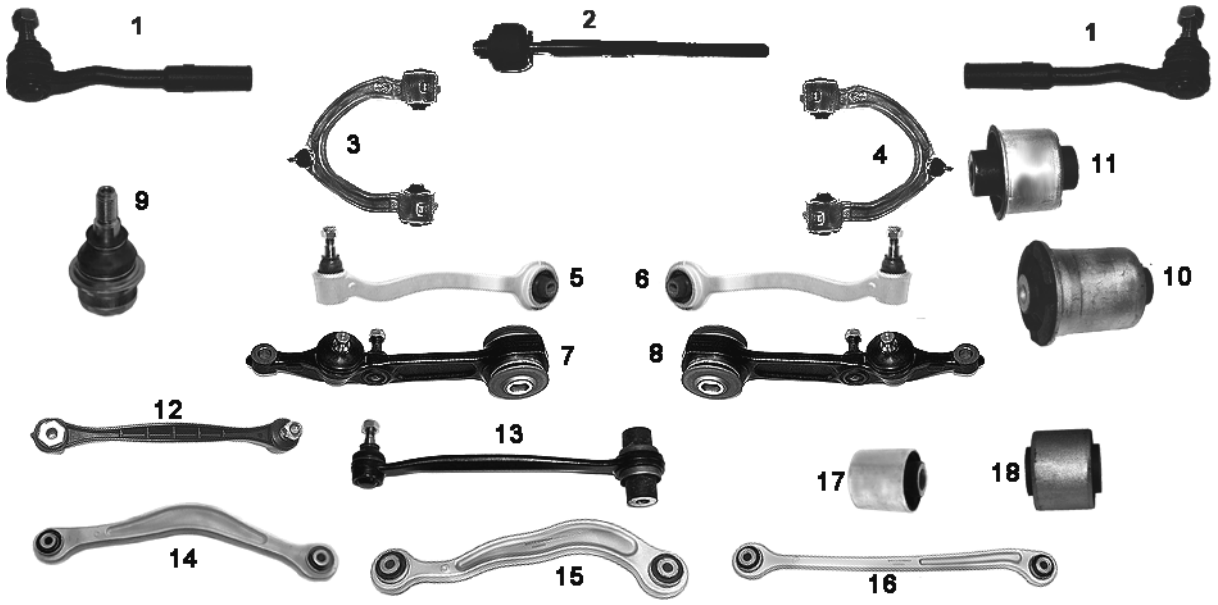

NR	MAPCO	REF								NEW	INFO
1	**59843**	2303380115	✓		✓	✓			✓	✓		
2	**59844**	2303380015	✓		✓	✓			✓	✓		
3	**51830**	2203309307	✓		✓		✓		✓	✓		
4	**51831**	2203308407	✓			✓	✓		✓	✓		
5	**51832**	2203304311	✓		✓			✓	✓	✓		
6	**51833**	2203304411	✓			✓		✓	✓	✓		
7	**59879**	2203308907	✓		✓			✓	✓	✓		
8	**59880**	2203309007	✓			✓		✓	✓	✓		
9	**51834**	2203330727	✓		✓	✓		✓	✓	✓		
10	**36833**	2303330314	✓		✓	✓	✓		✓	✓		
11	**36832**	2203331814	✓		✓	✓			✓	✓		
12	**59845**	2203203689		✓	✓		✓		✓	✓		
13	**59874**	2203500453		✓	✓	✓			✓	✓		
14	**59876**	2203502206		✓		✓	✓		✓	✓		
15	**59877**	2203502406		✓	✓	✓	✓		✓	✓		
16	**59878**	2203502606		✓	✓	✓		✓	✓	✓		
17	**37832**	1403524565		✓	✓	✓			✓	✓	✓	
18	**37833**	1403524465		✓	✓	✓			✓	✓	✓	Ø 41,5 mm

MERCEDES-BENZ S-KLASSE (W221) 10/05→

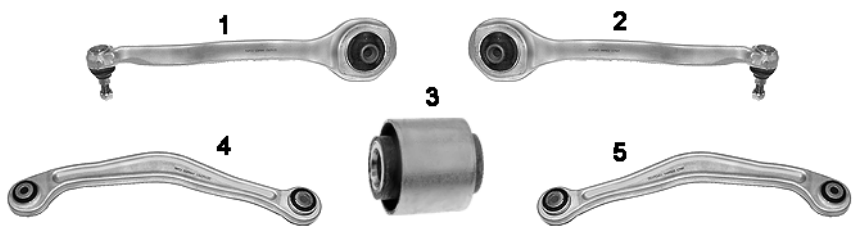

NR	MAPCO	REF								NEW	INFO
1	**51880**	2213302311	✓		✓			✓	✓	✓	✓	
2	**51881**	2213302411	✓			✓		✓	✓	✓	✓	
3	**37835**	2213330814	✓		✓	✓		✓	✓	✓	✓	✓ 1 & 2
4	**51860/1**	2213500206		✓	✓		✓		✓	✓	✓	
5	**51860**	2213501006		✓		✓	✓		✓	✓	✓	

MERCEDES-BENZ SL (R129) 03/89→10/01

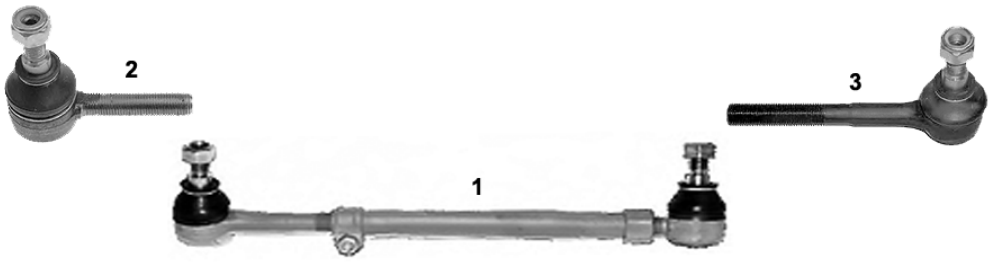

NR	MAPCO	REF								NEW	INFO
1	**59865**	1293300203	✓		✓	✓			✓	✓	
2	**59866**	0013305235	✓		✓	✓			✓	✓	M14x1,5RHT innen/inner
3	**59867**	0013305335	✓		✓	✓			✓	✓	M14x1,5LHT aussen/outside

MERCEDES-BENZ SPRINTER (902) 1997→05/06



NR	MAPCO	REF								NEW	INFO
1	**49830**	9014600148	✓		✓	✓			✓	✓	M16 x 1,5 RHT
2	**49831**	9013330727	✓		✓	✓			✓	✓	
3	**49833**	9014600155	✓		✓	✓			✓	✓	M16 x 1,5 RHT
4	**59854**	9013200289	✓		✓				✓	✓	
5	**59855**	9013200389	✓			✓			✓	✓	
6	**33947**	9043230085	✓		✓	✓			✓	✓	☑ 4x4, Ø 25,0 mm
7	**36947**	9013230285	✓		✓	✓			✓	✓	Ø 26,0 mm

MERCEDES-BENZ SPRINTER (904) 02/96→05/06

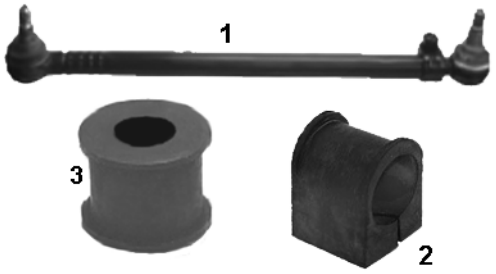

NR	MAPCO	REF								NEW	INFO
1	**49844**	3094603105	✓		✓	✓			✓	✓	
2	**33947**	9043230085	✓		✓	✓			✓	✓	Ø 25,0 mm
3	**36947**	9013230285	✓		✓	✓			✓	✓	Ø 26,0 mm

MERCEDES-BENZ SPRINTER (905) 616 CDI 04/01→

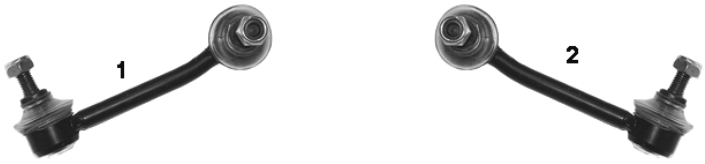

NR	MAPCO	REF									NEW	INFO
1	**52802**	9053200489	✓		✓				✓	✓	✓	
2	**52803**	9053200589	✓			✓			✓	✓	✓	

MERCEDES-BENZ SPRINTER (906) 06/06→

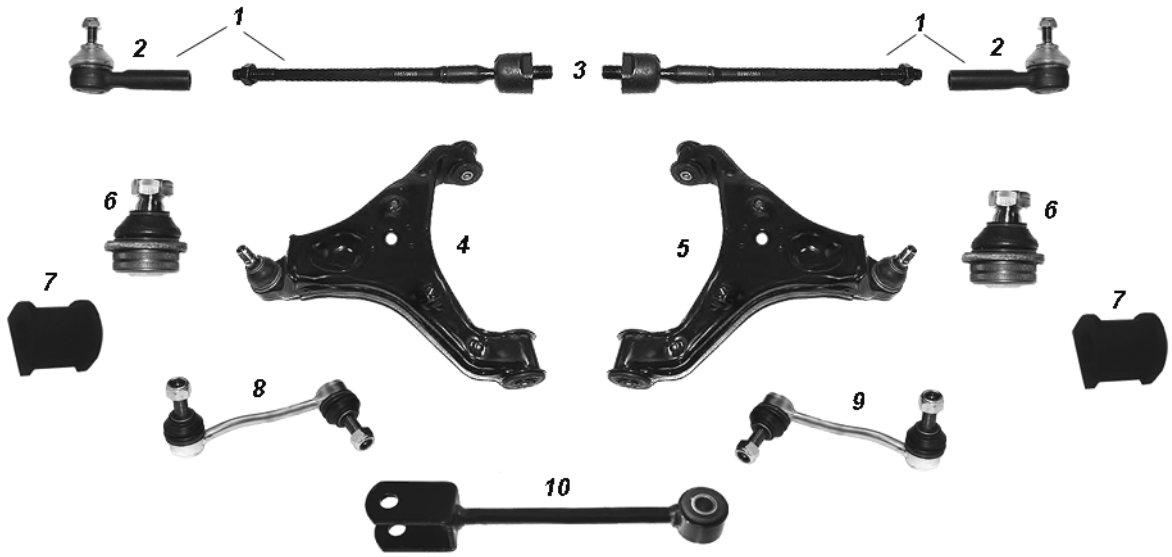

NR	MAPCO	REF									NEW	INFO
1	**52811**	9064600055	✓		✓	✓			✓	✓	✓	
2	**52809**	9064600048	✓		✓	✓			✓	✓	✓	
3	**52810**	9064600055part	✓		✓	✓			✓	✓	✓	
4	**52816**	9063304007	✓		✓				✓	✓	✓	
5	**52817**	9063304107	✓			✓			✓	✓	✓	
6	**52812**	9063380227	✓		✓	✓			✓	✓	✓	
7	**37837**	6383230285	✓		✓	✓			✓	✓	✓	innen / inner Ø 24,0 mm
8	**52813**	9063201789	✓		✓				✓	✓	✓	
9	**52814**	9063201889	✓			✓			✓	✓	✓	
10	**52815**	9063201389		✓	✓	✓			✓	✓	✓	

MERCEDES-BENZ VIANO (W639) 09/03→



NR	MAPCO	REF									NEW	INFO
1	**52804HPS**	6393200089	✓		✓				✓	✓	✓	**282,0 mm**
2	**52805HPS**	6393200189	✓			✓			✓	✓	✓	**282,0 mm**
3	**37837**	6383230285	✓		✓	✓			✓	✓	✓	innen / inner Ø 24,0 mm

MERCEDES-BENZ VITO (638) / V- CLASS (638/2) 01/96 →07/03

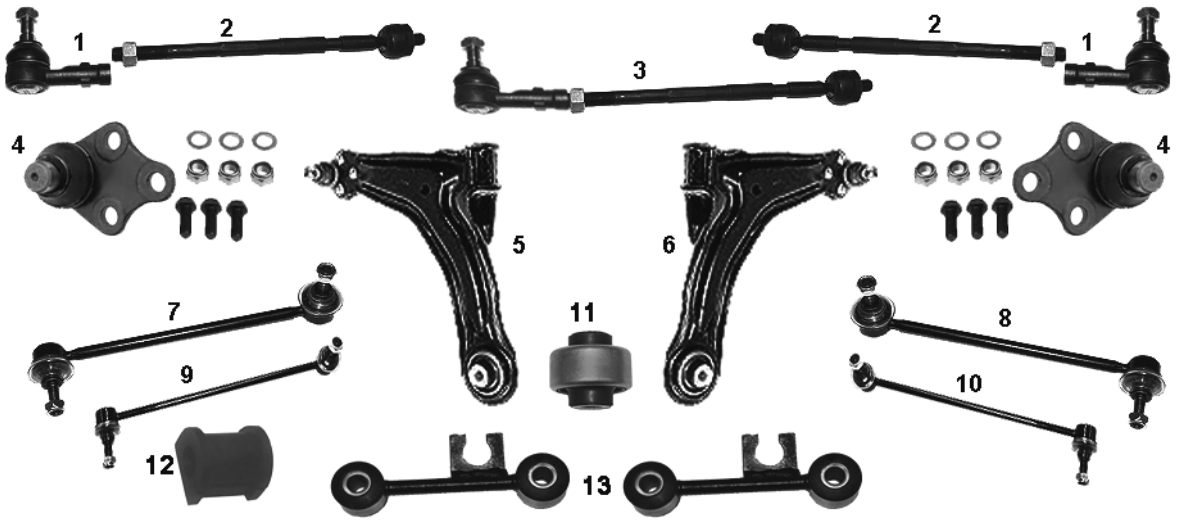

NR	MAPCO	REF			←	→	↑	↓			NEW	INFO
1	**49836**	6384600048	✓		✓	✓			✓	✓		
2	**49837**	6384600255	✓		✓	✓			✓	✓		
3	**49838**		✓		✓	✓			✓	✓		**1 + 2**
4	**49839**	6383330027	✓		✓	✓			✓	✓		
5	**59801**	6383300010	✓		✓			✓	✓	✓		
6	**59802**	6383300110	✓			✓		✓	✓	✓		
7	**49841HPS**	6383230268	✓		✓				✓	✓		**250,0mm**
8	**49840HPS**	6383230368	✓			✓			✓	✓		**250,0mm**
9	**52800**	6383230468	✓		✓				✓	✓	✓	**230,0mm**
10	**52801**	6383230568	✓			✓			✓	✓	✓	**230,0mm**
11	**37836**	6383330814	✓		✓	✓			✓	✓	✓	✓ **5 + 6**
12	**37837**	6383230285	✓		✓	✓			✓	✓	✓	innen / inner Ø 24,0 mm
13	**49843**	6383260116		✓	✓	✓			✓	✓		

MERCEDES-BENZ VITO (W639) 09/03→



NR	MAPCO	REF			←	→	↑	↓			NEW	INFO
1	**52804HPS**	6393200089	✓		✓				✓	✓	✓	**282,0 mm**
2	**52805HPS**	6393200189	✓			✓			✓	✓	✓	**282,0 mm**
3	**37837**	6383230285	✓		✓	✓			✓	✓	✓	innen / inner Ø 24,0 mm

MERCEDES-BENZ T1(601), (602) 1977 → 02/96

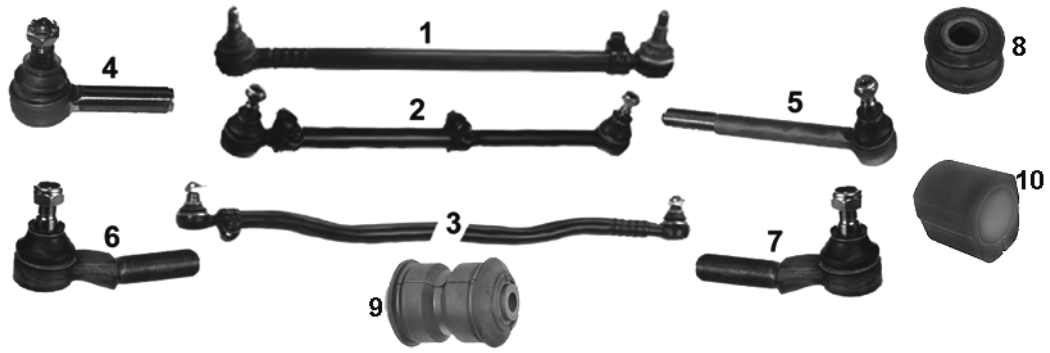

NR	MAPCO	REF			←	→	↑	↓			NEW	INFO
1	**49844**	3094603105	✓		✓	✓			✓	✓		, 486mm
2	**49845**	6014601205	✓		✓				✓	✓		483mm
3	**49846**	6023300103	✓		✓	✓			✓	✓		1352mm
4	**49847**	0004608548	✓		✓	✓			✓	✓		M22x1,5 , 95mm
5	**49848**	0004608648	✓		✓	✓			✓	✓		M22x1,5 LHT , 245mm
6	**49849**	6023305835	✓		✓				✓	✓		M24x1,5 , 115mm
7	**49880**	6023305735	✓			✓			✓	✓		M24x1,5 , 115mm
8	**33946**	6013210350	✓		✓	✓			✓	✓		Ø innen/inner 12mm
9	**36925**	6023240050		✓	✓	✓			✓	✓		
10	**36926**	6023260282	✓		✓	✓			✓	✓		Ø innen/inner 32,0mm

MERCEDES-BENZ T1/ TN 07/81 → 06/95

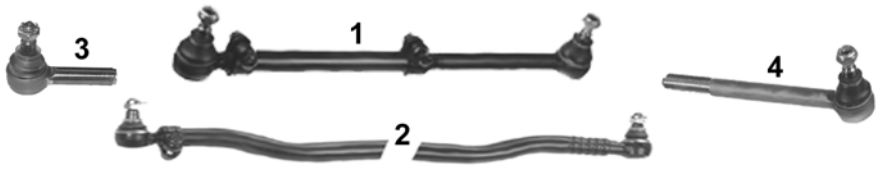

NR	MAPCO	REF			←	→	↑	↓			NEW	INFO
1	**49845**	6014601205	✓		✓				✓	✓		483mm
2	**49846**	6023300103	✓		✓	✓			✓	✓		1352mm
3	**49847**	0004608548	✓		✓	✓			✓	✓		M22x1,5 , 95mm
4	**49848**	0004608648	✓		✓	✓			✓	✓		M22x1,5 LHT , 245mm

MERCEDES-BENZ T2/L 1968→ 12/88



NR	MAPCO	REF			←	→	↑	↓			NEW	INFO
1	**49844**	3094603105	✓		✓	✓			✓	✓		, 486mm

MERCEDES-BENZ 100 (631) 12/90→ 12/96

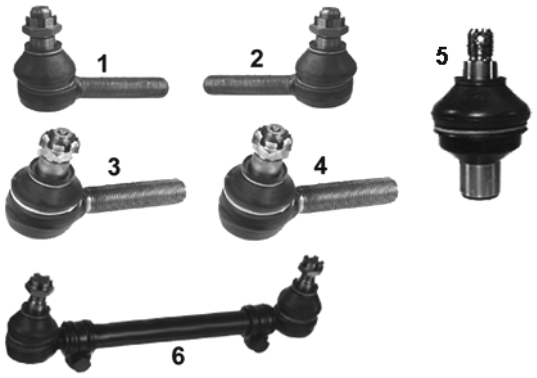

NR	MAPCO	REF										INFO
1	**49881**	6313300435	✓		✓				✓	✓		M20x1,5LHT
2	**49882**	4603301235	✓			✓			✓	✓		M20x1,5RHT
3	**49883**	6313380410	✓		✓	✓			✓	✓		innen/inner M18x1,5LHT , 95mm
4	**49884**	3094603105	✓		✓	✓			✓	✓		aussen/outside M18x1,5RHT , 95mm
5	**59898**	0003200028	✓		✓	✓	✓	✓	✓	✓		
6	**49886**	6313300703	✓		✓	✓			✓	✓		aussen/outside

MERCEDES-BENZ O 100 City 01/94 →

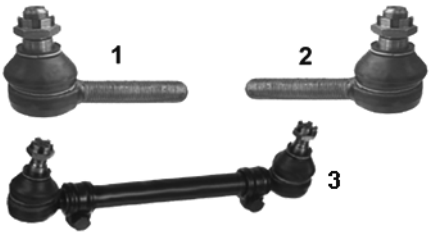

NR	MAPCO	REF										INFO
1	**49881**	6313300435	✓		✓				✓	✓		M20x1,5LHT
2	**49882**	4603301235	✓			✓			✓	✓		M20x1,5RHT
3	**49886**	6313300703	✓		✓	✓			✓	✓		aussen/outside

MINI

MINI COOPER
MINI COOPER S - ONE

06/01→
03/02→

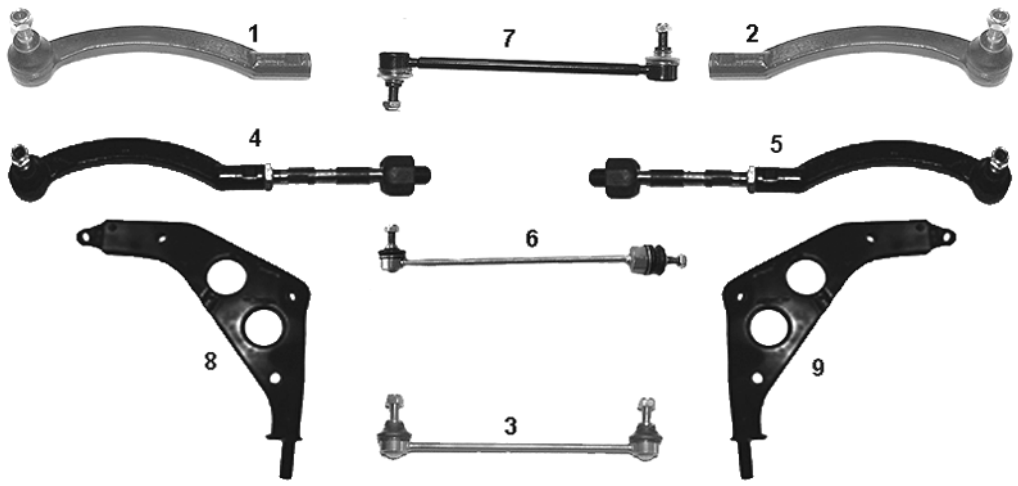

NR	MAPCO	REF								NEW	INFO
1	**59690**	32216754565	✓		✓				✓	✓		
2	**59691**	32216754566	✓			✓			✓	✓		
3	**59694**	35551507999		✓	✓	✓			✓	✓		
4	**59692**	32116754563	✓		✓				✓	✓		
5	**59693**	32116754564	✓			✓			✓	✓		
6	**59695**	31351507989	✓		✓	✓			✓	✓		
7	**59614HPS**	31356759537	✓		✓	✓			✓	✓		
8	**51663**	31121492144	✓		✓				✓	✓		
9	**51664**	31126761410	✓			✓			✓	✓		

MITSUBISHI

MITSUBISHI CARISMA
MITSUBISHI CARISMA

07/95→06/06
06/96→06/06

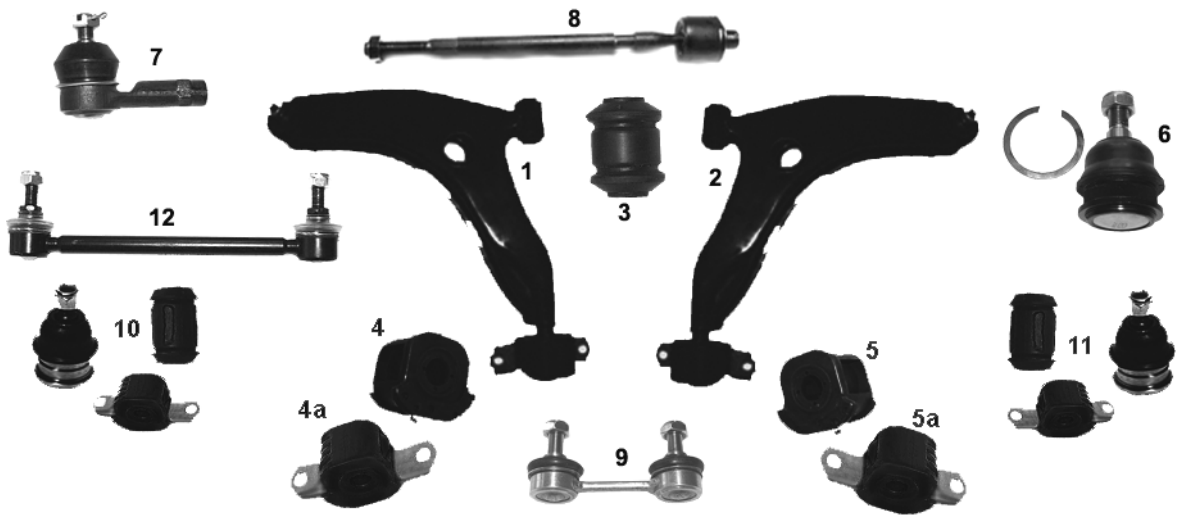

NR	MAPCO	REF								NEW	INFO
1	49544	MR 915769	✓		✓				✓	✓	→02/99
2	49545	MR 915770	✓			✓			✓	✓	→02/99
3	33552	MR 130982	✓		✓	✓			✓	✓	
4	33551	MB 808909	✓		✓				✓	✓	
4a	33551/1	MB 808909	✓		✓				✓	✓	
5	33550	MB 808910	✓			✓			✓	✓	
5a	33550/1	MB 808910	✓			✓			✓	✓	
6	49578	MB 241833	✓		✓	✓			✓	✓	→02/99
7	19540	MB 912076	✓		✓	✓			✓	✓	M12 x1,25 RHT
8	59536	MR 244901	✓		✓	✓			✓	✓	
9	49245	MR 272117		✓	✓	✓			✓	✓	
10	19255		✓		✓				✓	✓	Kit →02/99
11	19256		✓			✓			✓	✓	Kit →02/99
12	49905HPS	MR 272116	✓		✓	✓			✓	✓	200,0mm

MITSUBISHI COLT – LANCER III

10/83→12/85

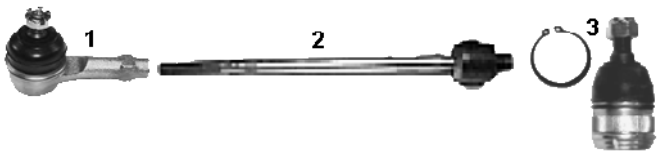

NR	MAPCO	REF								NEW	INFO
1	19540	MB 527169	✓		✓	✓			✓	✓	M12 x1,25 RHT
2	19541	MB 532046	✓		✓	✓				✓	M12 x1,25 RHT
3	19542	MB 001696	✓		✓	✓			✓	✓	

MITSUBISHI COLT III – LANCER IV 01/86→05/92

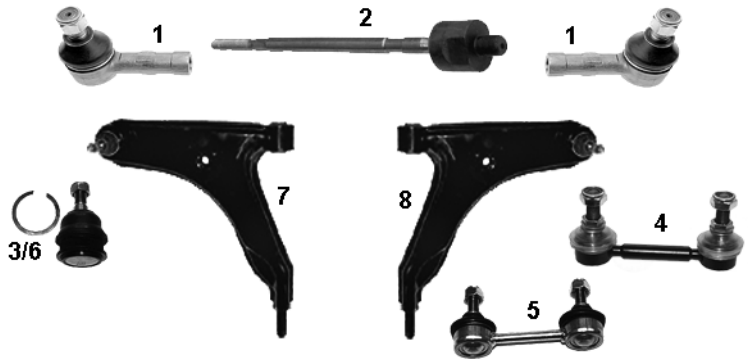

NR	MAPCO	REF								NEW	INFO
1	**19547**	MB 527169	✓		✓	✓			✓	✓		1988→1992
2	**19550**	MB 553249	✓		✓	✓			✓	✓		
3	**19542**	MB912076	✓		✓	✓			✓	✓		
4	**19543HPS**	MB 518892	✓		✓	✓			✓	✓		
5	**19544**	MB 809354		✓	✓	✓			✓	✓		
6	**49578**	MB 241833	✓		✓	✓			✓	✓		1988→1992
7	**59356**	MB 518806	✓		✓				✓	✓		
8	**59357**	MB 518807	✓			✓			✓	✓		

MITSUBISHI COLT IV – LANCER V (CB/D_A) 06/92 →12/95

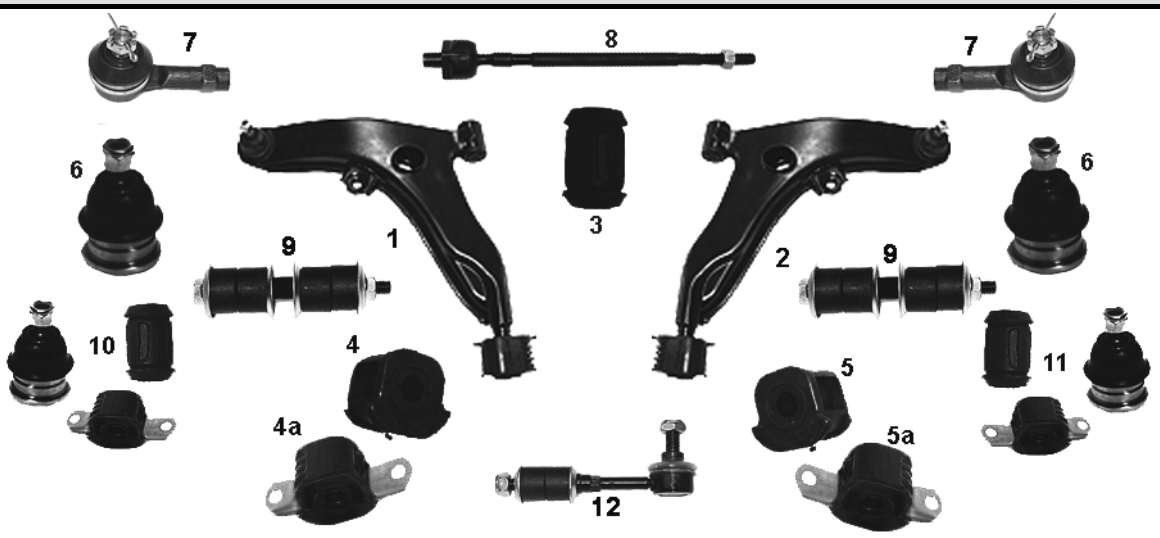

NR	MAPCO	REF								NEW	INFO
1	**49540**	MB 912077	✓		✓				✓	✓		1988→1992
2	**49541**	MB 912078	✓			✓			✓	✓		
3	**33552**	MR 130982	✓		✓	✓			✓	✓		
4	**33551**	MB 808909	✓		✓				✓	✓		
4a	**33551/1**	MB 808909	✓		✓				✓	✓		
5	**33550**	MB 808910	✓			✓			✓	✓		
5a	**33550/1**	MB 808910	✓			✓			✓	✓		
6	**49578**	MB 241833	✓			✓			✓	✓		02/94→ 04/96
7	**19547**	MB 527169	✓		✓	✓			✓	✓		1988→12/95
8	**59308**	MR 130807	✓		✓				✓	✓		M12x1,25RHT 315 mm
9	**51598**	MB 241974	✓		✓	✓			✓	✓	✓	
10	**19255**		✓		✓				✓	✓		Kit
11	**19256**		✓			✓			✓	✓		Kit
12	**59309**	MB 809355		✓	✓	✓			✓	✓		✓1.8 Gti

MITSUBISHI COLT V (CJ_A), LANCER VI (CK/P_A) 12/95→

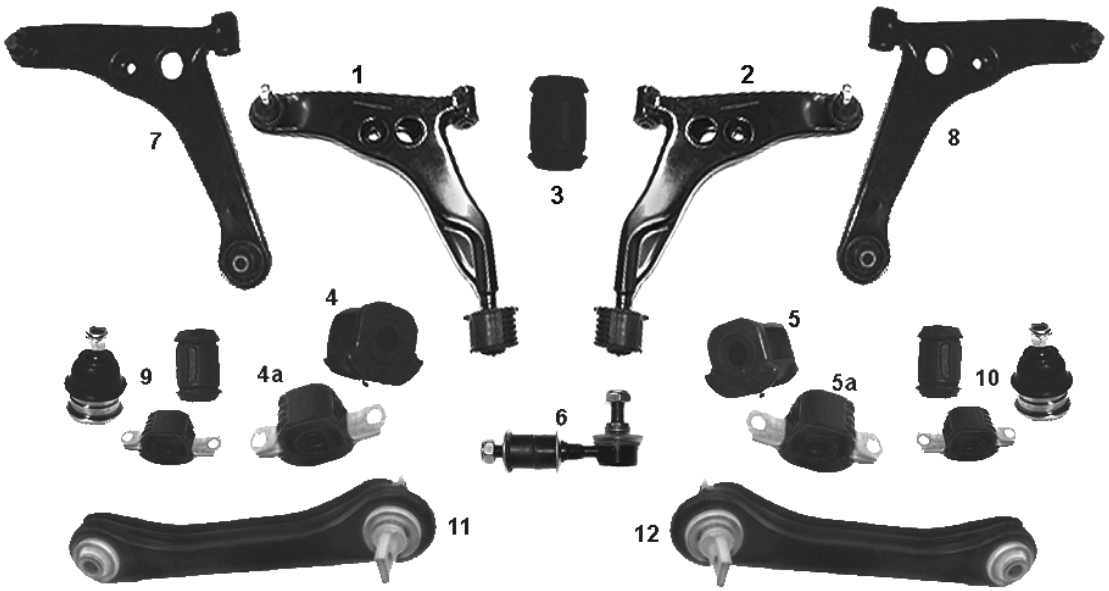

NR	MAPCO	REF								NEW	INFO
1	**49542**	MR 241341	✓		✓				✓	✓		→ 12/00
2	**49543**	MR 241342	✓			✓			✓	✓		→ 12/00
3	**33552**	MR 130982	✓		✓				✓	✓		
4	**33551**	MB 808909	✓		✓				✓	✓		→ 12/00
4a	**33551/1**	MB 808909	✓		✓				✓	✓		→ 12/00
5	**33550**	MB 808910	✓			✓			✓	✓		→ 12/00
5a	**33550/1**	MB 808910	✓			✓			✓	✓		→ 12/00
6	**59540HPS**	MB 518780	✓		✓	✓			✓	✓		
7	**59283**	MR 403419	✓		✓				✓	✓		01/01→
8	**59284**	MR 403420	✓			✓			✓	✓		01/01→
9	**19255**		✓		✓				✓	✓		Kit
10	**19256**		✓			✓			✓	✓		Kit
11	**59396**	MB 809220		✓	✓				✓	✓		
12	**59397**	MB 809221		✓		✓			✓	✓		

MITSUBISHI ECLIPSE I + II 04/91→

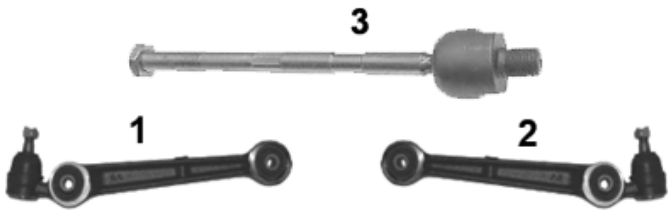

NR	MAPCO	REF								NEW	INFO
1	**49241**	MR 296295	✓		✓				✓	✓		
2	**49242**	MR 296296	✓			✓			✓	✓		
3	**59307**	MB 949343	✓		✓	✓			✓	✓		M14x1,5RHT 235,0 mm

MITSUBISHI GALANT II, III, IV 1980→ 10/92

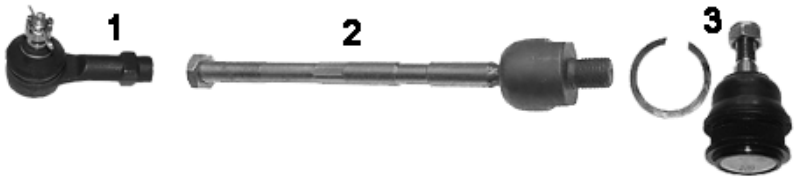

NR	MAPCO	REF								NEW	INFO
1	**49256**	MB 192430	✓			✓			✓	✓		
2	**59307**	MB 949343	✓		✓	✓			✓			06/88 → M14x1,5RHT 235,0 mm
3	**49578**	MB 241833	✓		✓				✓	✓		

MITSUBISHI GALANT V 11/92→ 08/96

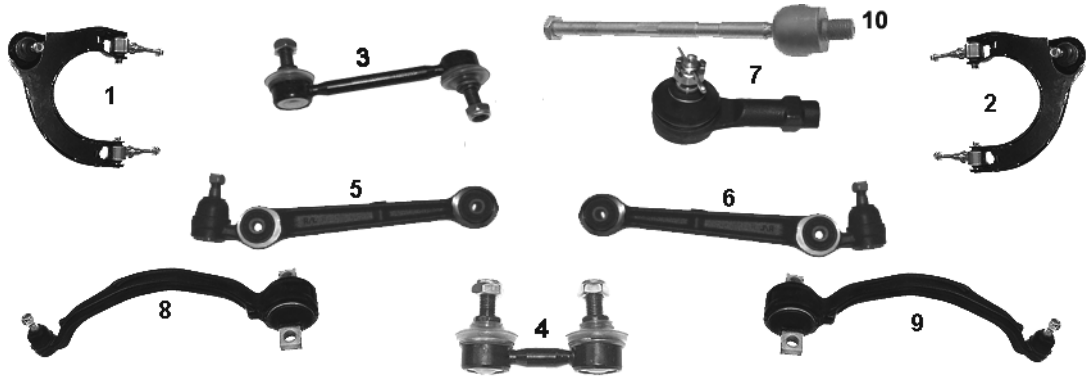

NR	MAPCO	REF								NEW	INFO
1	**49243**	MB 912505	✓		✓		✓		✓	✓		
2	**49244**	MB 912506	✓			✓	✓		✓	✓		
3	**59541HPS**	MB 892981	✓		✓	✓			✓	✓		
4	**59542**	MB 518892		✓	✓	✓			✓	✓		
5	**49241**	MR 296295	✓		✓				✓	✓		
6	**49242**	MR 296296	✓			✓			✓	✓		
7	**49256**	MB 192430	✓		✓	✓			✓	✓		
8	**59398**	MB912511	✓		✓			✓	✓	✓		
9	**59399**	MB912512	✓			✓		✓	✓	✓		
10	**59307**	MB 949343	✓		✓	✓			✓			M14x1,5RHT 235,0 mm

MITSUBISHI GALANT VI (EA_) 09/96→

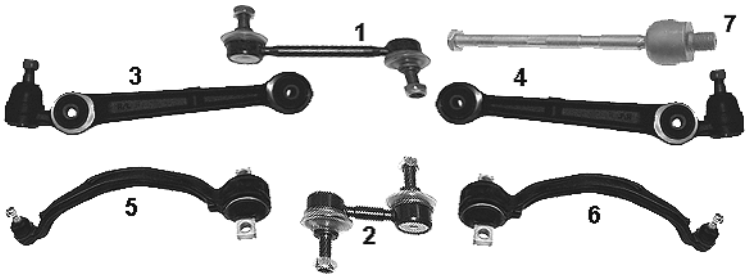

NR	MAPCO	REF			←	→	↑	↓			NEW	INFO
1	**59541HPS**	MB892981	✓		✓	✓			✓	✓		**120,0mm**
2	**59543HPS**	MB131732		✓	✓	✓			✓	✓		
3	**49241**	MR296295	✓		✓				✓	✓		
4	**49242**	MR296296	✓			✓			✓	✓		
5	**59398**	MB912511	✓		✓			✓	✓	✓		
6	**59399**	MB912512	✓			✓		✓	✓	✓		
7	**59307**	MB949343	✓		✓	✓			✓			M14x1,5RHT 235,0 mm

MITSUBISHI L200 1987 → 1998

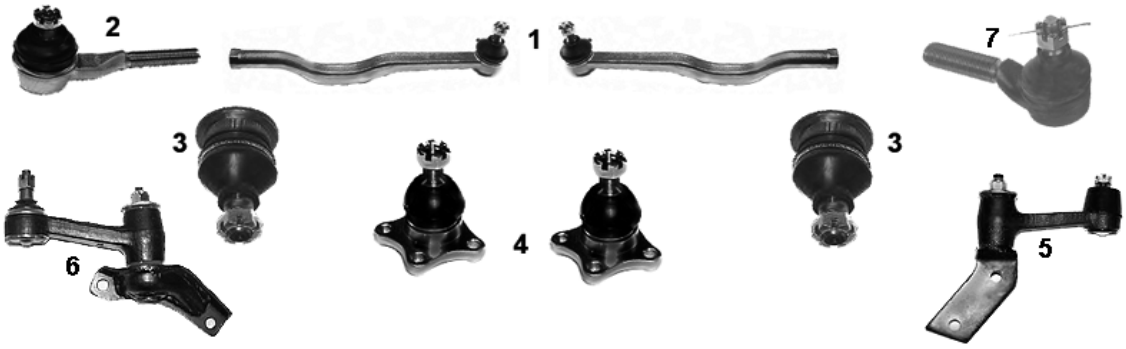

NR	MAPCO	REF			←	→	↑	↓			NEW	INFO
1	**59222**	MB 122011	✓		✓	✓			✓	✓		innen/inner
2	**59221**	MB 166982	✓		✓	✓			✓	✓		außen / outside
3	**59223**	MB 109585	✓		✓	✓	✓		✓	✓		
4	**59224**	MB 241818	✓		✓	✓		✓	✓	✓		
5	**59303**	MB 527228	✓		✓	✓			✓	✓		**RHD**
6	**59304**	MB 241423	✓		✓	✓			✓	✓		**LHD**
7	**59373**	MB 564855	✓		✓	✓			✓	✓		✓ **2.5 D+TD** außen / outside M16x1,5 LHT

MITSUBISHI L300 Bus — 11/84 → 1994



NR	MAPCO	REF								NEW	INFO
1	**49249**	MB166427	✓		✓	✓			✓	✓		innen/inner
2	**49247**	MB 527349	✓		✓	✓	✓		✓	✓		
3	**49248**	MB 527383-01	✓		✓	✓			✓	✓		
4	**49940**	MB 430112	✓		✓			✓	✓	✓		
5	**49941**	MB 430113	✓			✓			✓	✓		
6	**59310**	MB 527650	✓		✓	✓			✓	✓		aussen/outside M14x1,5 LHT
7	**59306**	MB 532971	✓		✓	✓				✓		

MITSUBISHI L300 Pritsche — 1981 → 1994

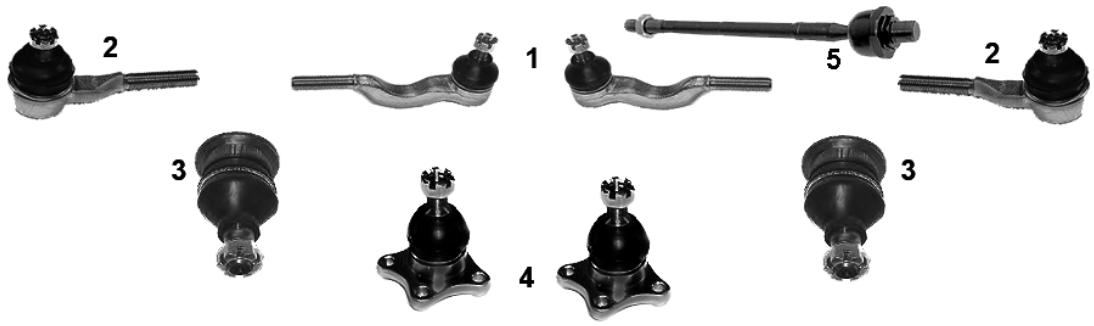

NR	MAPCO	REF								NEW	INFO
1	**59220**	MB 166980	✓		✓	✓			✓	✓		innen/inner
2	**59221**	MB 166982	✓		✓	✓			✓	✓		aussen/outside
3	**59223**	MB 109585	✓		✓	✓	✓		✓	✓		
4	**59224**	MB 241818	✓		✓			✓	✓	✓		
5	**59306**	MB 532971	✓		✓	✓				✓		

MITSUBISHI OUTLANDER — 05/03 →



NR	MAPCO	REF								NEW	INFO
1	**49250HPS**	MR316368	✓		✓				✓	✓		
2	**49251HPS**	MR316369	✓			✓			✓	✓		

MITSUBISHI PAJERO I - MONTERO 1982 → 1990

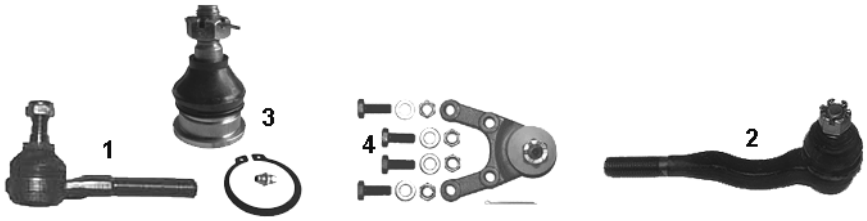

NR	MAPCO	REF			←	→	↑	↓			NEW	INFO
1	**19546**	MB 315775	✓		✓	✓			✓	✓		M16x1,5 LHT aussen/outside
2	**19545**	MB 315776	✓		✓	✓			✓	✓		M16x1,5 RHT innen/inner
3	**19551**	MB 176309	✓		✓	✓	✓		✓	✓		
4	**19552**	MB 176308	✓		✓			✓	✓	✓		

MITSUBISHI PAJERO II - MONTERO 1990 → 04/00

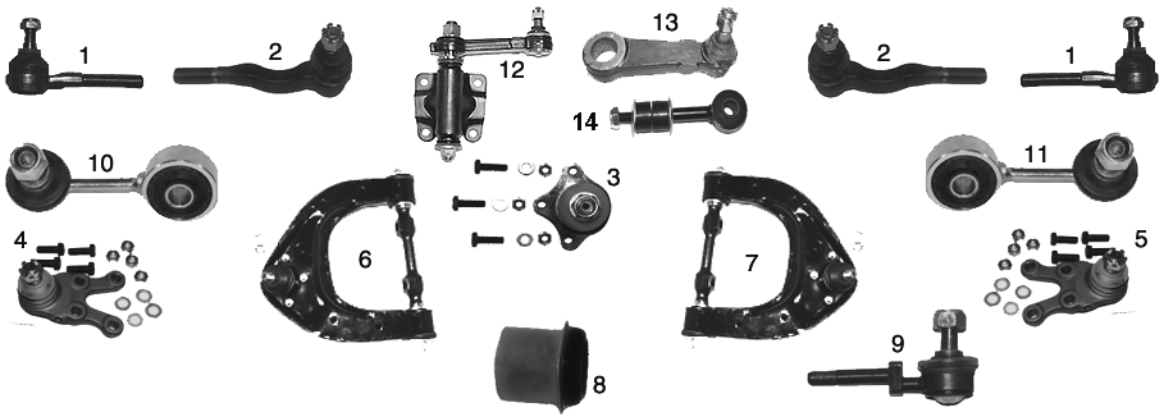

NR	MAPCO	REF			←	→	↑	↓			NEW	INFO
1	**19549**	MB 831043	✓		✓	✓			✓	✓		aussen/outside
2	**19548**	MB 831044	✓		✓	✓			✓	✓		innen/inner
3	**19553**	MB 860829	✓		✓	✓	✓		✓	✓		
4	**19554**	MB 831037	✓		✓			✓	✓	✓		
5	**19555**	MB 831038	✓			✓		✓	✓	✓		
6	**49546**	MR 296093	✓		✓		✓		✓	✓		1992→ 04/00
7	**49547**	MR 296094	✓			✓	✓		✓	✓		1992→ 04/00
8	**33553**	MB 633820	✓		✓	✓		✓	✓	✓		
9	**49240**	MB 584021		✓	✓	✓	✓		✓	✓		
10	**59546**	MR 267876	✓		✓				✓	✓		
11	**59547**	MR 267877	✓			✓			✓	✓		
12	**59305**	MB 831042	✓		✓	✓			✓	✓		**RHD**
13	**59340**	MB 831040	✓		✓	✓			✓	✓		**RHD**
14	**51549**	MB 633926	✓		✓	✓			✓	✓		**107,0 mm**

MITSUBISHI PAJERO III — 04/00 →



NR	MAPCO	REF								NEW	INFO
1	**51543**	MB 267877	✓		✓				✓	✓		
2	**51544**	MR 374522	✓			✓			✓	✓		
3	**51545HPS**	MR 418052		✓	✓				✓	✓		
4	**51546**	MR 418053		✓		✓			✓	✓		

MITSUBISHI SPACE GEAR — 05/95 →



NR	MAPCO	REF								NEW	INFO
1	**59544**	MR 267873	✓		✓	✓			✓	✓		
2	**59545HPS**	MR 267875		✓	✓	✓			✓	✓		

MITSUBISHI SPACE RUNNER (N1_W, N2_W) — 10/91 → 08/99

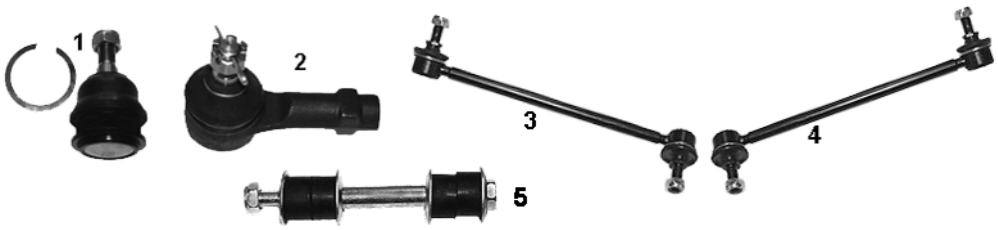

NR	MAPCO	REF								NEW	INFO
1	**49578**	MB 241833	✓		✓	✓			✓	✓		
2	**49256**	MB 192430	✓		✓	✓			✓	✓		
3	**59537HPS**	MR 316435	✓		✓				✓	✓	✓	2.0+2.4 GDI
4	**59538HPS**	MR 316436	✓			✓			✓	✓	✓	2.0+2.4 GDI
5	**51240**	MB 831559		✓	✓	✓			✓	✓	✓	

MITSUBISHI SPACE STAR 06/98 →



NR	MAPCO	REF			←	→	↑	↓			NEW	INFO
1	**49578**	MB 241833	✓		✓	✓			✓	✓		
2	**49256**	MB 192430	✓		✓	✓			✓	✓		
3	**51550**	MB 809222		✓	✓				✓	✓		
4	**51551**	MB 809223		✓		✓			✓	✓		

MITSUBISHI SPACE WAGON (N3_W, N4_W) 10/91 → 10/98



NR	MAPCO	REF			←	→	↑	↓			NEW	INFO
1	**49256**	MB 192430	✓		✓	✓			✓	✓		
2	**59510HPS**	MB 672370	✓		✓				✓	✓		
3	**59511HPS**	MB 808076	✓			✓			✓	✓		
4	**49578**	MB 241833	✓		✓	✓			✓	✓		
5	**51240**	MB 831559		✓	✓	✓			✓	✓	✓	

MITSUBISHI SPACE WAGON (N5_W) 10/98 →



NR	MAPCO	REF			←	→	↑	↓			NEW	INFO
1	**59537HPS**	MR 316435	✓		✓				✓	✓		
2	**59538HPS**	MR 316436	✓			✓			✓	✓		

NISSAN

NISSAN ALMERA N15 1995→07/00

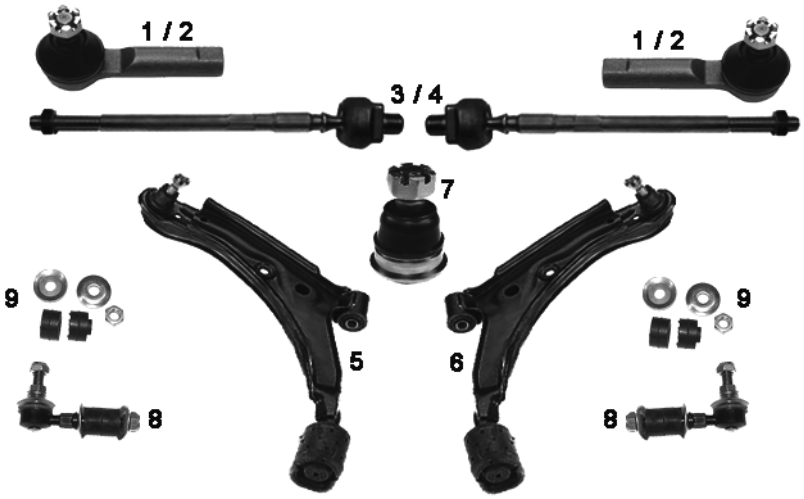

NR	MAPCO	REF								NEW	INFO
1	**19528**	48520-0M025	✓		✓	✓			✓	✓		✓ 1.4-1.6
2	**59524**	48520-0M085	✓		✓	✓			✓	✓		✓ 2.0D + 2.0 Gti
3	**59253**	48521-1M210	✓		✓	✓				✓		M12x1,25RHT
4	**59360**	48521-1M226	✓		✓	✓			✓			M12x1,25RHT
5	**49528**	54501-0M060	✓		✓				✓	✓		
6	**49529**	54500-0M060	✓			✓			✓	✓		
7	**59522**	40160-50Y00	✓		✓	✓		✓	✓	✓		
8	**49525HPS**	54618-50Y00	✓			✓			✓	✓		
9	**33529**		✓		✓	✓			✓	✓		49525

NISSAN ALMERA N16 2000→

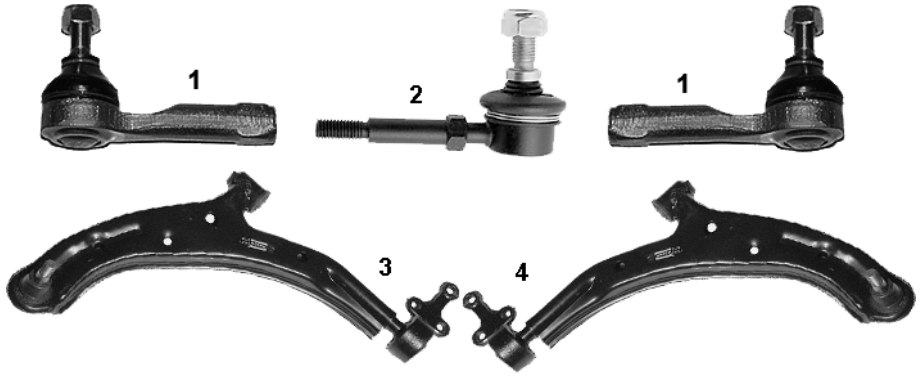

NR	MAPCO	REF								NEW	INFO
1	**59225**	48520-15U25	✓		✓	✓			✓	✓		M12x1,25
2	**59226HPS**	54618-4M400	✓		✓	✓			✓	✓		
3	**51527**	54501-4M400	✓		✓			✓	✓	✓		
4	**51528**	54500-4M410	✓			✓		✓	✓	✓		

NISSAN ALMERA TINO (V10) 08/00→



NR	MAPCO	REF								NEW	INFO
1	**51281**	54668-4U000	✓		✓				✓	✓	✓	
2	**51282**	54618-4U000	✓			✓			✓	✓	✓	

NISSAN BLUEBIRD 11/83→12/90

NR	MAPCO	REF								NEW	INFO
1	**59255**	48520-50A26	✓		✓	✓			✓	✓		M12x1,25RHT 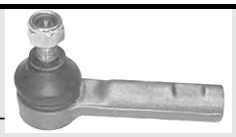 1

NISSAN CHERRY 11/83→12/90

NR	MAPCO	REF								NEW	INFO
1	**59325**	40160-01A25	✓		✓	✓			✓	✓		13 mm  1

NISSAN INTERSTAR 07/02 →

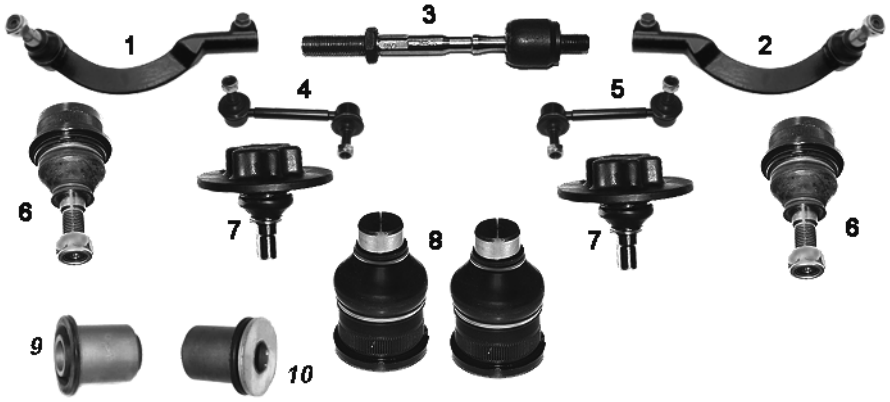

NR	MAPCO	REF								NEW	INFO
1	**49137**	48520-00QAH	✓		✓				✓	✓		(M16x1,5RHT) 225mm
2	**49138**	48520-00QAJ	✓			✓			✓	✓		(M16x1,5RHT) 225mm
3	**49125**	48521-00QAF	✓		✓	✓			✓	✓		150mm
4	**49109HPS**	54618-00QAB	✓		✓				✓	✓		
5	**49108HPS**	54618-00QAA	✓			✓			✓	✓		
6	**49110**	40160-00QAB	✓		✓	✓	✓		✓	✓		aussen/ outer
7	**49156**	40110-00QAA	✓		✓	✓			✓	✓		Innen/ inner
8	**49111**	40160-000AC	✓		✓	✓		✓	✓	✓		
9	**36704**	54570-00QAA	✓		✓	✓		✓	✓	✓	✓	
10	**36705**	54423-00QAA	✓		✓	✓		✓	✓	✓	✓	hinten/ rear

NISSAN KUBISTAR 08/03 →

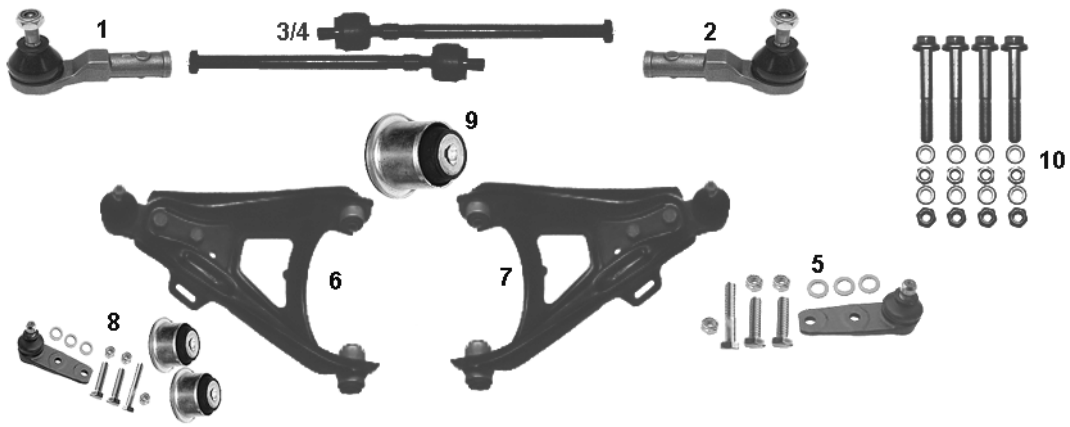

NR	MAPCO	REF								NEW	INFO
1	**49135**	48520-00QAN	✓		✓				✓	✓		12,20mm M14x1,5RHT
2	**49136**	48520-00QAP	✓			✓			✓	✓		12,20mm M14x1,5RHT
3	**49117/1**	48521-00QAG	✓		✓	✓			✓	✓		außen M 12x1,5 (**SMI**) **300mm**
4	**19195**	48521-00QAA	✓		✓	✓				✓		**235mm**
5	**19109**	54501-00QAH	✓		✓	✓			✓	✓		
6	**19196**	54501-00Q0L	✓		✓				✓	✓		
7	**19197**	54500-00Q1A	✓			✓			✓	✓		
8	**19208**		✓		✓	✓			✓	✓		Kit
9	**33165**	54560-00Q0A	✓		✓	✓			✓	✓		
10	**95137**		✓		✓	✓			✓	✓		MS

NISSAN MAXIMA (J30) 1988→1994
NISSAN MAXIMA QX (A32) 1994→2000

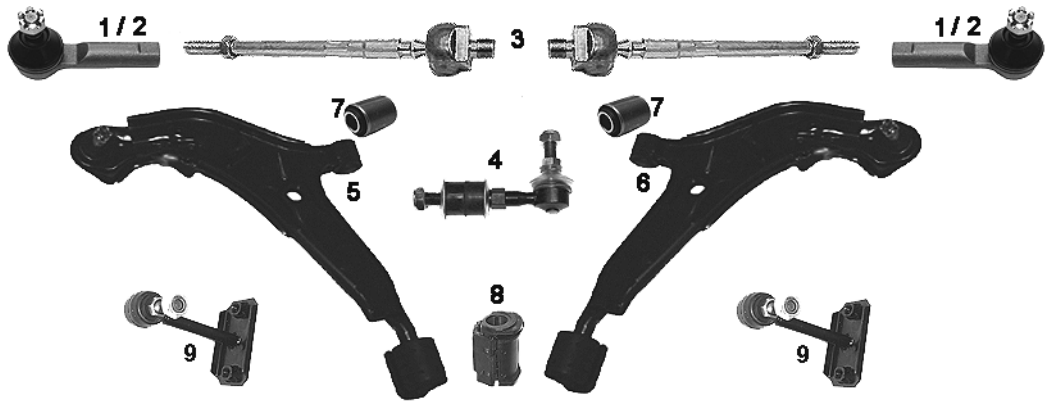

NR	MAPCO	REF								NEW	INFO
1	**59524**	48520-0M085	✓		✓	✓			✓	✓		✓ 2.0
2	**59256**	48520-88E26	✓		✓	✓			✓	✓		✓ 3.0 145mm M12x1,25 RHT
3	**59525**	48521-0C025	✓		✓	✓			✓	✓		**M16x1,25 330mm**
4	**49222HPS**	54618-0E000	✓		✓	✓			✓	✓		
5	**49220**	54501-41U01	✓		✓				✓	✓		
6	**49221**	54500-39U01	✓			✓			✓	✓		
7	**33511**	54590-01E00	✓		✓	✓			✓	✓		
8	**33506**	54570-50Y11	✓		✓	✓			✓	✓		
9	**49219**	56260-51E15		✓	✓	✓			✓	✓		✓ A32

NISSAN MAXIMA QX (A33) 03/00→



NR	MAPCO	REF									NEW	INFO
1	**19538**	54668-2Y000	✓		✓				✓	✓	✓	M10x1,25 90mm
2	**19539**	54618-2Y000	✓			✓			✓	✓	✓	M10x1,25 90mm
3	**51286**	54570-00QAA	✓		✓			✓	✓	✓	✓	
4	**51287**	54423-00QAA	✓			✓		✓	✓	✓	✓	

NISSAN MICRA K 10 1983 → 1992

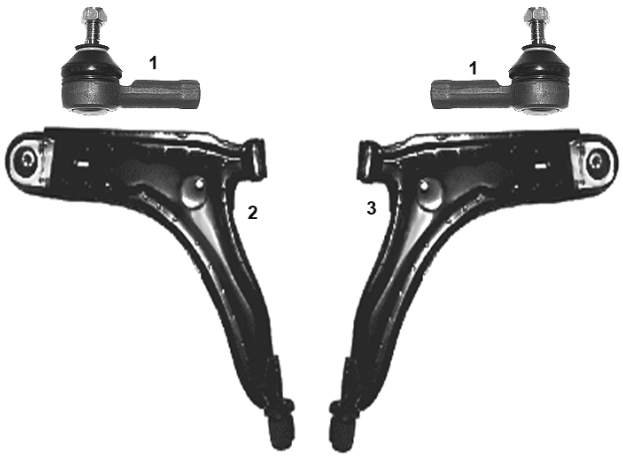

NR	MAPCO	REF									NEW	INFO
1	**19556**	48520-17B25	✓		✓	✓			✓	✓		M12x1,25RHT
2	**49538**	54501-21B00	✓		✓				✓	✓		
3	**49539**	54500-21B00	✓			✓			✓	✓		

NISSAN MICRA K 11 01/92→09/00

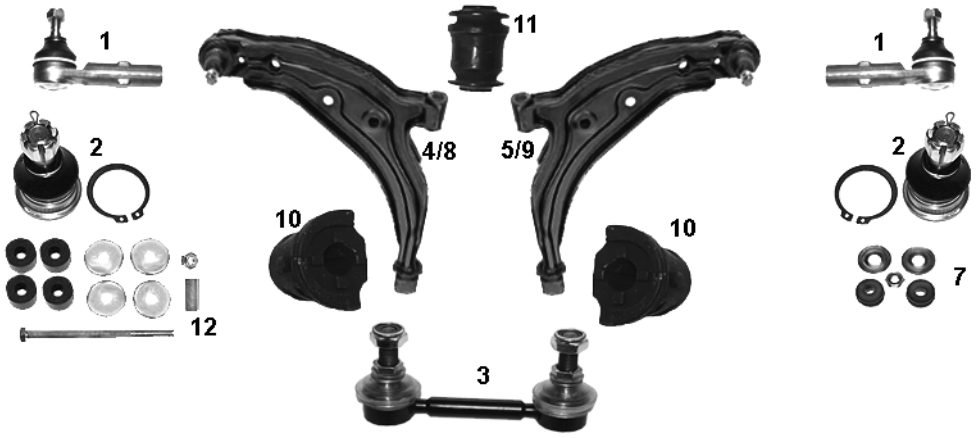

NR	MAPCO	REF								NEW	INFO
1	**19525**	48520 -4F125	✓		✓	✓			✓	✓		M12x1,25RHT
2	**19526**	40160 -4F100	✓		✓	✓			✓	✓		
3	**19527HPS**	56261 -4F725	✓	✓	✓	✓			✓	✓		
4	**49520**	54501 -4F105	✓		✓				✓	✓		01/92 → 02/98
5	**49521**	54500 -4F105	✓			✓			✓	✓		01/92 → 02/98
7	**33529**		✓		✓	✓			✓	✓		
8	**49536**	54501 -6F600	✓		✓				✓	✓		02/98→09/00
9	**49537**	54500 -6F600	✓			✓			✓	✓		02/98→09/00
10	**33501**	54476 -41B02	✓		✓	✓			✓	✓		
11	**33502**	54560 -17B01	✓		✓	✓			✓	✓		
12	**49228**	54618 -47B0A	✓		✓	✓			✓	✓		

NISSAN MICRA K 12 01/03 →

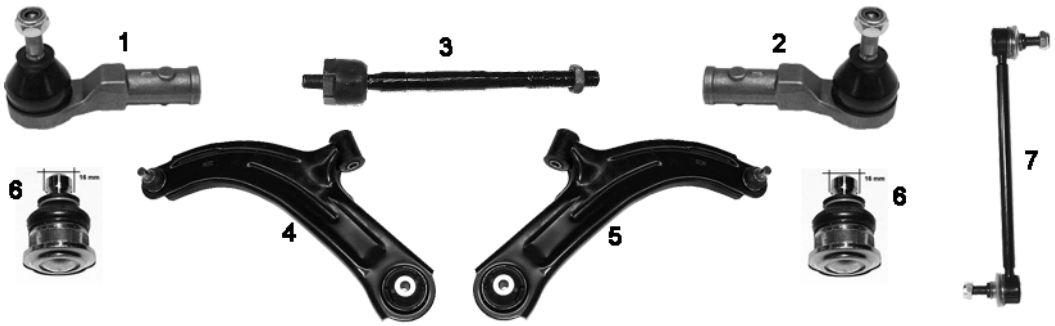

NR	MAPCO	REF								NEW	INFO
1	**49135**	48520-00QAN	✓		✓				✓	✓		**04/04**→ 12,20mm M14x1,5RHT
2	**49136**	48520-00QAP	✓			✓			✓	✓		**04/04**→ 12,20mm M14x1,5RHT
3	**49159**	7701475841	✓		✓	✓			✓	✓	✓	**310,0mm**
4	**59358**	54501-AX600	✓		✓				✓	✓		
5	**59359**	54500-AX600	✓			✓			✓	✓		
6	**51283**	40160-AX000	✓		✓	✓			✓	✓		ø = 16mm
7	**19120HPS**	54618-AX600	✓		✓	✓			✓	✓		M10x1,25 248,0mm

NISSAN MICRA C+C (K12) 08/05 →

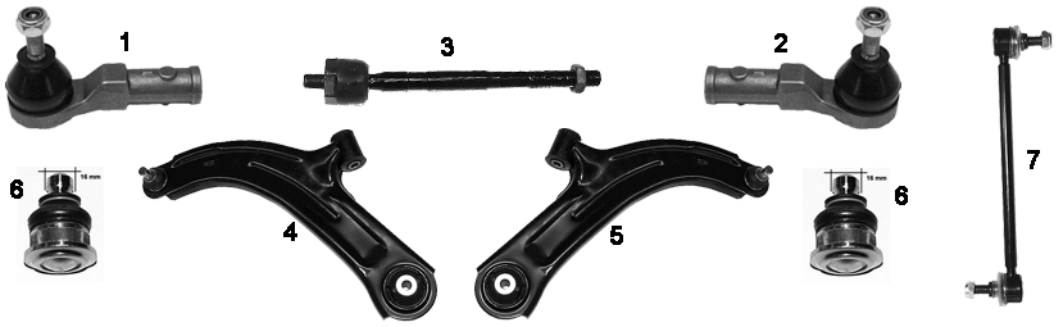

NR	MAPCO	REF			←	→	↑	↓			NEW	INFO
1	**49135**	48520-00QAN	✓		✓				✓	✓		12,20mm M14x1,5RHT
2	**49136**	48520-00QAP	✓			✓			✓	✓		12,20mm M14x1,5RHT
3	**49159**	7701475841	✓		✓	✓			✓	✓	✓	**310,0mm**
4	**59358**	54501-AX600	✓		✓				✓	✓		
5	**59359**	54500-AX600	✓			✓			✓	✓		
6	**51283**	40160-AX000	✓		✓	✓			✓	✓		ø = 16mm
7	**19120HPS**	54618-AX600	✓		✓	✓			✓	✓		M10x1,25 248,0mm

NISSAN NOTE 03/06 →

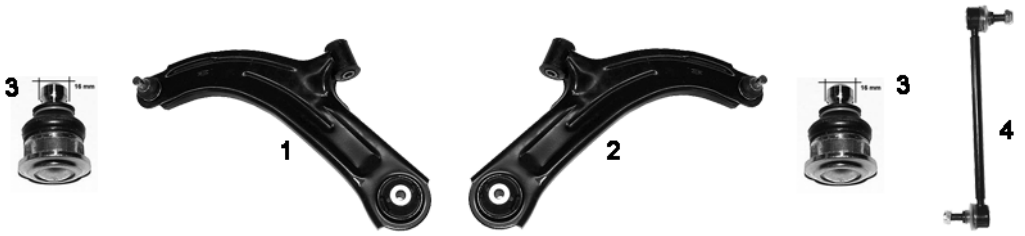

NR	MAPCO	REF			←	→	↑	↓			NEW	INFO
1	**59358**	54501-AX600	✓		✓				✓	✓		
2	**59359**	54500-AX600	✓			✓			✓	✓		
3	**51283**	40160-AX000	✓		✓	✓			✓	✓		ø = 16mm
4	**19120HPS**	54618-AX600	✓		✓	✓			✓	✓		M10x1,25 248,0mm

NISSAN PATHFINDER (R50) 09/97→



NR	MAPCO	REF			←	→	↑	↓			NEW	INFO
1	**49224HPS**	54618-0W001	✓		✓	✓			✓	✓		
2	**49223HPS**	56260-41G11		✓	✓	✓			✓	✓		

NISSAN PATROL GR II (Y61) 06/97→



NR	MAPCO	REF			←	→	↑	↓			NEW	INFO
1	**49229**	54618-VB000	✓		✓	✓			✓	✓		
2	**51522**	56620-VB010		✓	✓	✓			✓	✓		

NISSAN PICKUP (720) 1983→1986

NR	MAPCO	REF			←	→	↑	↓			NEW	INFO
1	**59259**	48521-01W00	✓		✓	✓			✓	✓		innen/inner M18x1,5 RHT  1

NISSAN PICKUP (4WD, D21) 1986→1992



NR	MAPCO	REF			←	→	↑	↓			NEW	INFO
1	**59526**	48520-61G25	✓		✓	✓			✓	✓		14,4mm aussen/outside M16x1.5RHT
2	**59528**	48570-61G25	✓		✓	✓			✓	✓		14,4mm innen/inner M16x1.5LHT
3	**19535**	40110-01G25	✓		✓	✓	✓		✓	✓		
4	**19536**	40160-01G50	✓		✓	✓		✓	✓	✓		
5	**59520**	40160-50W25	✓		✓	✓			✓	✓		

NISSAN PRAIRE (M10, NM10) 01/83→10/88

NR	MAPCO	REF			←	→	↑	↓			NEW	INFO
1	**59325**	40160-01A25	✓		✓	✓			✓	✓		13 mm  1

NISSAN PRIMASTAR 03/01→

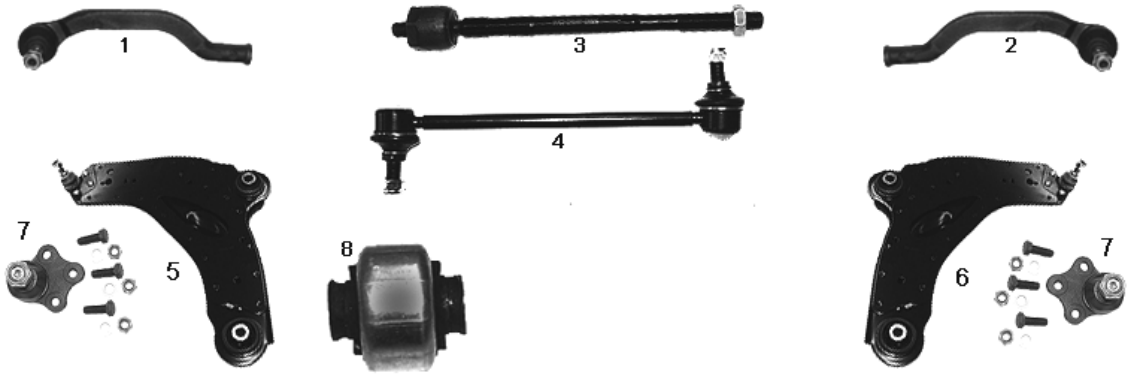

NR	MAPCO	REF			←	→	↑	↓			NEW	INFO
1	**49143**	48520-00QAK	✓		✓				✓	✓		
2	**49144**	48520-00QAL	✓			✓			✓	✓		
3	**49155**	48520-00QAM	✓		✓	✓			✓	✓		280,0 mm
4	**49118HPS**	54616-00QAA	✓		✓	✓			✓	✓		
5	**49141**	54503-00QAA	✓		✓			✓	✓	✓		
6	**49142**	54502-00QAA	✓			✓		✓	✓	✓		
7	**49140**	54502-00QAA	✓		✓	✓		✓	✓	✓		
8	**33122**	54502-00QAA	✓		✓	✓			✓	✓		

NISSAN PRIMERA P10 – W10 1990→ 06/96

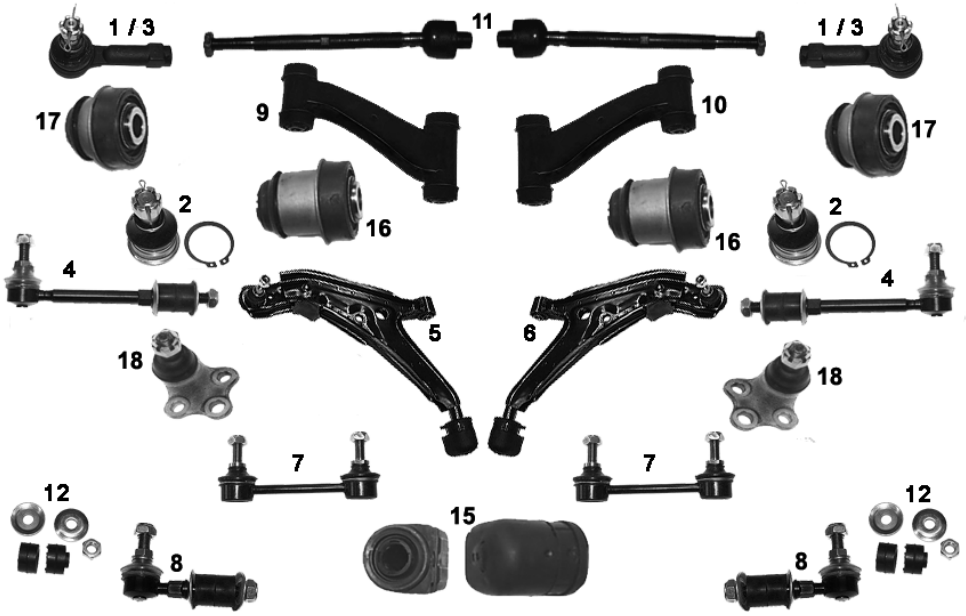

NR	MAPCO	REF			←	→	↑	↓			NEW	INFO
1	**19523**	48520-73J35	✓		✓	✓			✓	✓		✓ P10 M12x1,25RHT
2	**19524**	40160-50A00	✓		✓	✓			✓	✓		STOP W10
3	**59257**	48520-D0126	✓		✓	✓			✓	✓		✓W10, 13mm M12x1,25 RHT
4	**19529HPS**	54618-86J25	✓		✓	✓			✓	✓		✓ 2.0
5	**49522**	54501-86J00	✓		✓				✓	✓		✓P10/ W10 08/94→
6	**49523**	54500-86J00	✓			✓			✓	✓		✓P10/ W10 08/94→
7	**49524**	56261-86J25		✓	✓	✓			✓	✓		✓1.6
8	**49525HPS**	54618-50Y00	✓		✓	✓			✓	✓		✓1.6
9	**49526**	54525-2F010	✓		✓		✓		✓	✓		
10	**49527**	54524-2F010	✓			✓	✓		✓	✓		
11	**19530**	48521-72E06	✓		✓	✓			✓	✓		
12	**33529**		✓		✓	✓			✓	✓		49525HPS
15	**33503**	54570-50J00	✓		✓	✓		✓	✓	✓		
16	**33504**	54541-90J02	✓		✓	✓	✓		✓	✓		
17	**33505**	54545-90J00	✓		✓	✓	✓		✓	✓		
18	**59521**	40160-01E00	✓		✓	✓			✓	✓		✓W10 → 08/94

NISSAN PRIMERA P11 09/96→

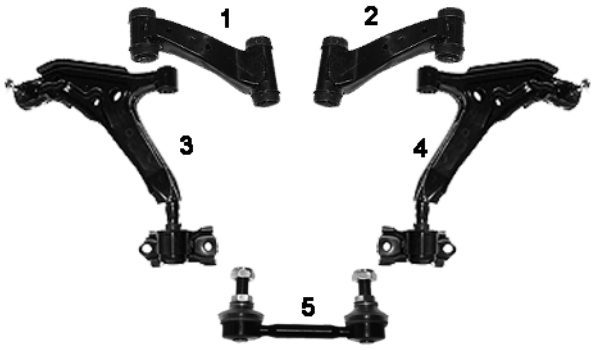

NR	MAPCO	REF			←	→	↑	↓			NEW	INFO
1	**49526**	54525-2F010	✓		✓		✓		✓	✓		
2	**49527**	54524-2F010	✓			✓	✓		✓	✓		
3	**49534**	54501-2F500	✓		✓	✓		✓	✓	✓		
4	**49535**	54500-2F500	✓		✓	✓		✓	✓	✓		
5	**51525HPS**	56261-0E000		✓	✓	✓			✓	✓		✓ 2.0 16V

NISSAN PRIMERA P12 03/02→

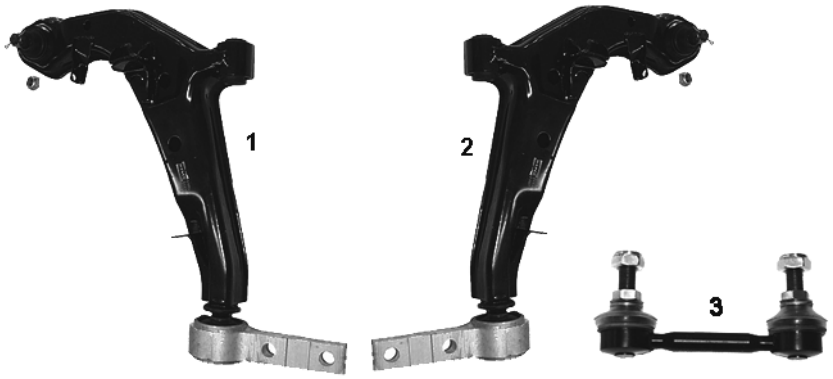

NR	MAPCO	REF			←	→	↑	↓			NEW	INFO
1	**51529**	54501-AV606	✓		✓			✓	✓	✓		
2	**51530**	54500-AV600	✓			✓		✓	✓	✓		
3	**51525HPS**	56261-0E000		✓	✓	✓			✓	✓		

NISSAN SERENA 11/92→

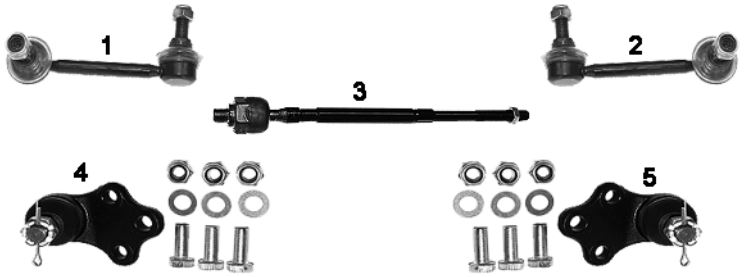

NR	MAPCO	REF			←	→	↑	↓			NEW	INFO
1	**59250**	54618-9C000	✓		✓				✓	✓		
2	**59251**	54618-9C002	✓			✓			✓	✓		
3	**59593**		✓		✓	✓			✓	✓		
4	**59598**	40161-9C500	✓		✓				✓	✓		
5	**59599**	40160-9C500	✓			✓			✓	✓		

NISSAN SUNNY I (B11) 03/82→08/90



NR	MAPCO	REF			←	→	↑	↓			NEW	INFO
1	**59325**	40160-01A25	✓		✓	✓			✓	✓		13 mm
2	**59257**	48520-D0126	✓		✓	✓			✓	✓		M12x1,25 RHT

NISSAN SUNNY II (N13) 06/86→08/90



NR	MAPCO	REF								NEW	INFO
1	**59257**	48520-D0126	✓		✓	✓			✓	✓		M12x1,25 RHT
2	**19524**	40160-50A00	✓		✓	✓		✓	✓	✓		
3	**59321**	54501-50A00	✓		✓			✓	✓	✓		
4	**59322**	54500-50A00	✓			✓		✓	✓	✓		

NISSAN SUNNY III (N14) + NX100 (B13) 1990→1996

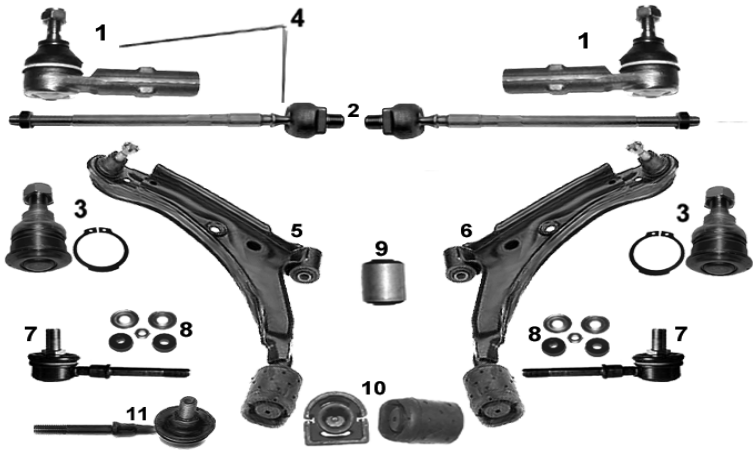

NR	MAPCO	REF								NEW	INFO
1	**19520**	48520-50Y25	✓		✓	✓			✓	✓		M12x1,25 RHT
2	**19521**	48521-50Y00	✓		✓	✓		✓	✓	✓		
3	**19522**	40160-52Y00	✓		✓	✓		✓	✓	✓		
4	**49532**	48510-50Y25	✓		✓	✓		✓	✓	✓		**1 + 2**
5	**49530**	54501-52Y70	✓		✓				✓	✓		
6	**49531**	54500-52Y70	✓			✓			✓	✓		
7	**49525HPS**	54618-50Y00	✓		✓	✓			✓	✓		
8	**33529**		✓		✓	✓			✓	✓		49525HPS
9	**33507**	54560-50A00	✓		✓	✓		✓	✓	✓		
10	**33500**	54570-50Y11	✓		✓	✓		✓	✓	✓		
11	**59851**	54618-54Y10		✓	✓	✓			✓	✓		

NISSAN SUNNY Kasten (Y10) 11/90→

NR	MAPCO	REF								NEW	INFO
1	**59257**	48520-D0126	✓		✓	✓			✓	✓		M12x1,25 RHT  **1**

NISSAN TERRANO I (WD21) 10/87→02/96

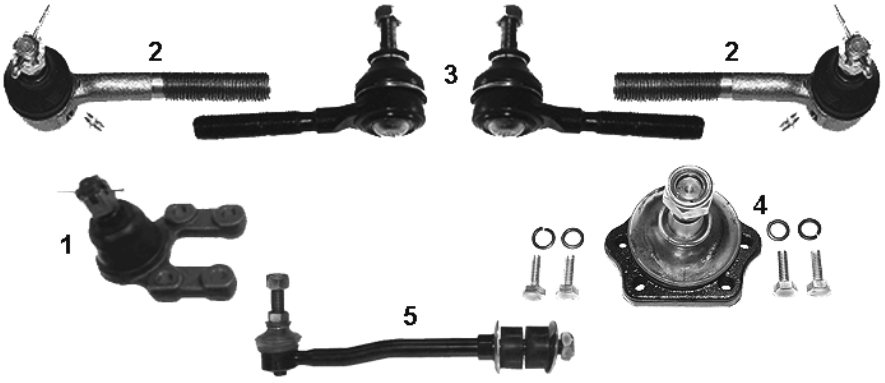

NR	MAPCO	REF			←	→	↑	↓			NEW	INFO
1	**59520**	40160-50W25	✓		✓	✓		✓	✓	✓		
2	**19534**	48520-31G25	✓		✓	✓			✓	✓		13,4mm aussen/outside
2	**59526**	48520-61G25	✓		✓	✓			✓	✓		14,4mm aussen/outside
3	**19533**	48570-31G25	✓		✓	✓			✓	✓		13,5 mm innen/inner
3	**59528**	48570-61G25	✓		✓	✓			✓	✓		14,4mm innen/inner
4	**19535**	40110-01G25	✓		✓	✓	✓		✓	✓		
5	**49227HPS**	56260-0F001		✓	✓	✓			✓	✓		

NISSAN TERRANO II (R20) 02/93→



NR	MAPCO	REF			←	→	↑	↓			NEW	INFO
1	**59526**	48520-61G25	✓		✓	✓			✓	✓		aussen/outside
2	**59528**	48570-61G25	✓		✓	✓			✓	✓		innen/inner
3	**49226HPS**	54618-0F000	✓		✓	✓			✓	✓		
4	**59520**	40160-50W25	✓		✓	✓		✓	✓	✓		
5	**49227HPS**	56260-0F001		✓	✓	✓			✓	✓		

NISSAN URVAN (E24) 05/87→

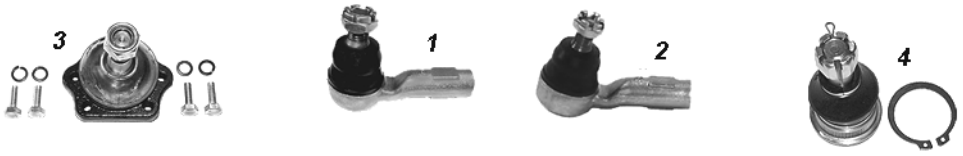

NR	MAPCO	REF			←	→	↑	↓			NEW	INFO
1	**59227**	48640-01N25	✓		✓	✓			✓	✓		M16x1,5 LHT
2	**59228**	48641-01N25		✓	✓	✓			✓	✓		M16x1,5 RHT
3	**19535**	40110-01G25	✓		✓	✓	✓		✓	✓		
4	**19536**	40160-01G50	✓		✓	✓		✓	✓	✓		

NISSAN VANETTE CARGO C22 10/86→12/95

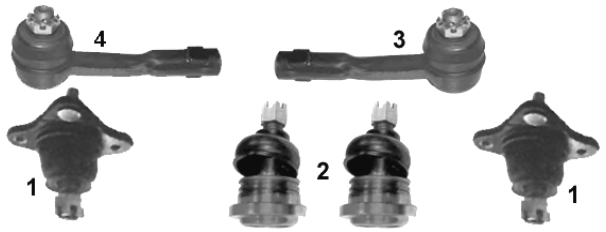

NR	MAPCO	REF									NEW	INFO
1	**19537**	40110-G5100	✓		✓	✓	✓		✓	✓		
2	**59523**	40160-G2525	✓		✓	✓		✓	✓	✓		
3	**59527**	48521-G5125	✓			✓			✓	✓		
4	**59229**	48641-G5125	✓		✓				✓	✓		

NISSAN VANETTE CARGO HC23 01/96→

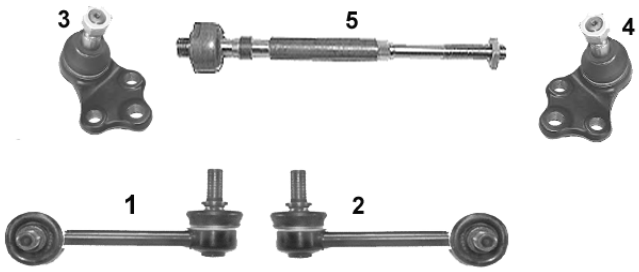

NR	MAPCO	REF									NEW	INFO
1	**59250**	54618-9C000	✓		✓				✓	✓		
2	**59251**	54618-9C002	✓			✓			✓	✓		
3	**59598**	40161-9C500	✓		✓				✓	✓		
4	**59599**	40160-9C500	✓			✓			✓	✓		
5	**59593**		✓		✓	✓			✓	✓		

NISSAN NISSAN X-TRAIL (T30) 07/01→

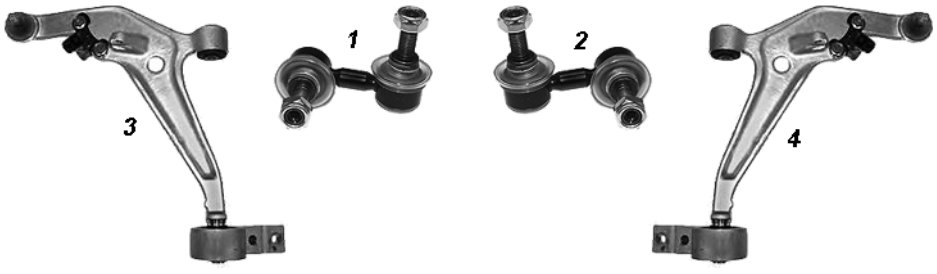

NR	MAPCO	REF									NEW	INFO
1	**51520**	54668-8H300	✓		✓				✓	✓		
2	**51521**	54618-8H300	✓			✓			✓	✓		
3	**51284**	54501-8H31A	✓		✓			✓	✓	✓	✓	
4	**51285**	54500-8H31A	✓			✓		✓	✓	✓	✓	

OPEL - VAUXHALL

OPEL AGILA (H100) 09/00→



NR	MAPCO	REF			←	→	↑	↓			NEW	INFO
1	**49611**	4701744	✓		✓	✓			✓	✓		M12x1,25RHT
2	**49602**	4701745	✓		✓	✓			✓	✓		M12x1,25RHT

OPEL AGILA / VAUXHALL AGILA 09/07→

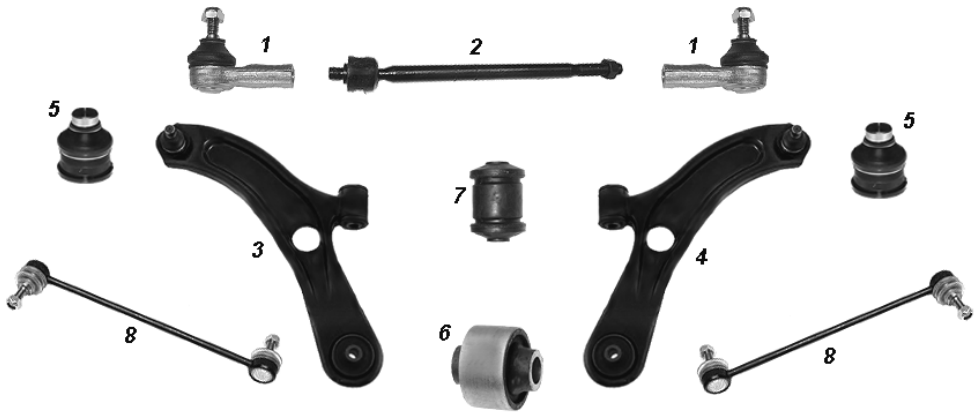

NR	MAPCO	REF			←	→	↑	↓			NEW	INFO
1	**51250**	4709 195	✓		✓	✓			✓	✓	✓	
2	**51251**	4709 161	✓		✓	✓						
3	**51252**	4708 300	✓		✓			✓	✓	✓	✓	
4	**51253**	4708 299	✓			✓		✓	✓	✓	✓	
5	**51254**	4708 299part	✓		✓	✓		✓	✓	✓	✓	Ø 16,7mm
6	**33576**	4708 299part	✓		✓	✓		✓	✓	✓	✓	
7	**33577**	4708 302	✓		✓	✓		✓	✓	✓	✓	
8	**51255**	4709 702	✓		✓	✓			✓	✓	✓	

OPEL ANTARA / VAUXHALL ANTARA 05/06→



NR	MAPCO	REF			←	→	↑	↓			NEW	INFO
1	**51301**	4803429 part	✓		✓	✓			✓	✓	✓	
2	**51302**	4806304	✓		✓				✓	✓	✓	
3	**51303**	4806305	✓			✓			✓	✓	✓	

OPEL ARENA 03/98→08/01

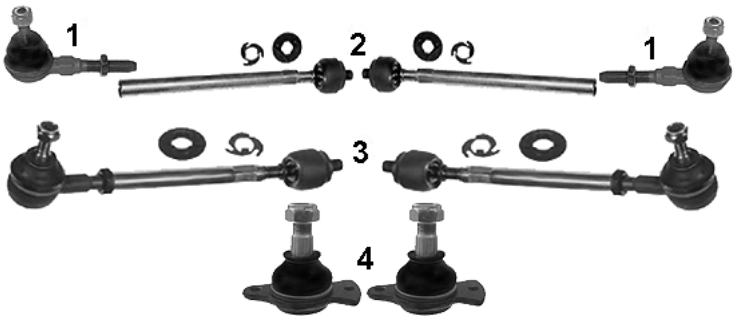

NR	MAPCO	REF								NEW	INFO
1	**19136**	4403661	✓		✓	✓			✓	✓	
2	**19129/1**	7701464313	✓		✓	✓			✓	✓	
3	**19129**	4403806	✓		✓	✓			✓	✓	
4	**19135**	4403641	✓		✓	✓			✓	✓	

OPEL ASCONA B / VAUXHALL CAVALIER 09/75→ 08/81
OPEL MANTA B 09/75→ 08/88

NR	MAPCO	REF								NEW	INFO
1	**19717**	352815	✓		✓	✓		✓	✓	✓	 1

OPEL ASCONA C
VAUXHALL CAVALIER Mk II 09/81→ 10/88

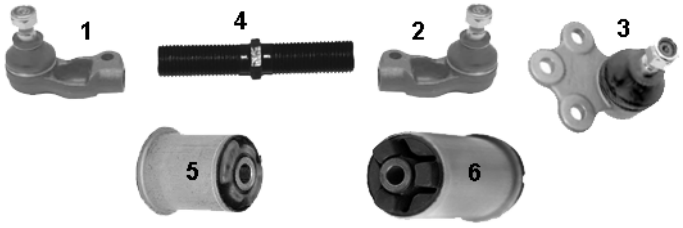

NR	MAPCO	REF								NEW	INFO
1	**19718**	324039	✓		✓				✓	✓	M16x1,5RHT
2	**19719**	324038	✓			✓			✓	✓	M16x1,5LHT
3	**19802**	1603121	✓		✓	✓			✓	✓	
4	**59367**	322575	✓		✓	✓			✓	✓	M16x1,5
5	**33785**	402642		✓	✓	✓			✓	✓	Ø 48,0mm
6	**33786**	402645		✓	✓	✓			✓	✓	Ø 59,0mm

OPEL ASTRA F
VAUXHALL ASTRA Mk II + III

1991→ 1998

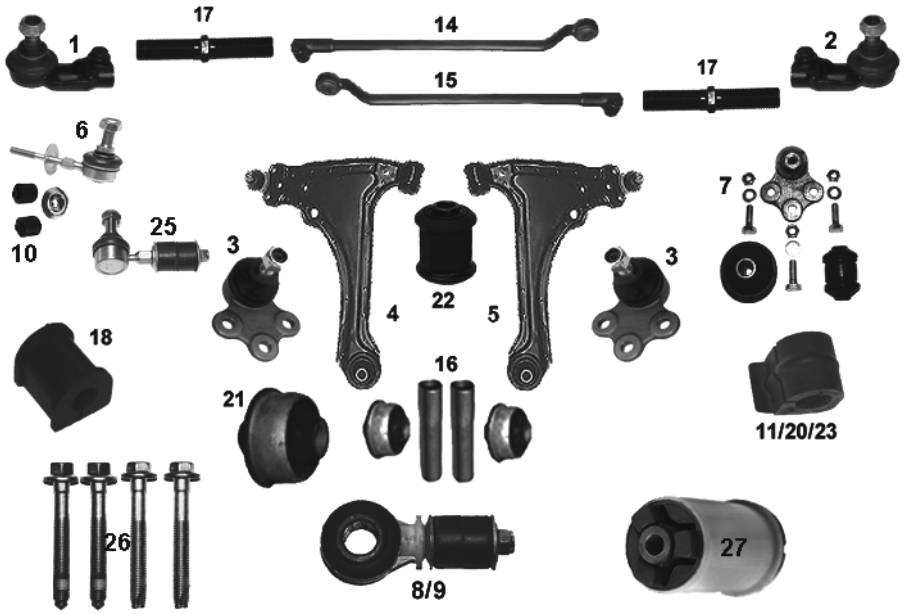

NR	MAPCO	REF								NEW	INFO
1	**19610**	324055	✓		✓				✓	✓		M16x2,0 RHT
2	**19611**	324056	✓			✓			✓	✓		M16x2,0 LHT
3	**19612**	1603167	✓		✓	✓			✓	✓		
4	**19619**	352193	✓		✓				✓	✓		Chassis R2595226→ STOP 16V + 4x4
5	**19620**	352192	✓			✓			✓	✓		Chassis R2595226→ STOP 16V + 4x4
6	**19607**	350263	✓		✓	✓			✓	✓		
7	**19270**		✓		✓	✓			✓	✓		Kit
8	**33726**	350260	✓		✓	✓			✓	✓		Ø 22 mm
9	**33727**	350261	✓		✓	✓			✓	✓		Ø 18 mm
10	**33728**		✓		✓	✓			✓	✓		**19607**
11	**33729**	350078	✓		✓	✓			✓	✓		Ø 22 mm
12	**49750**		✓		✓				✓	✓		**1 + 14 +17**
13	**49751**		✓			✓			✓	✓		**2 + 15 +17**
14	**49752**	322147	✓		✓				✓	✓		
15	**49753**	322146	✓			✓			✓	✓		
16	**33714/2**		✓		✓	✓			✓	✓		Kit
17	**49604**	322576	✓		✓	✓			✓	✓		
18	**33739**	444153		✓	✓	✓			✓	✓		Ø 14mm
20	**33755**	350081	✓		✓	✓			✓	✓		Ø 18mm
21	**33714**	352348	✓		✓	✓			✓	✓		
22	**33725**	352300	✓		✓	✓			✓	✓		
23	**33760**	350125	✓		✓	✓			✓	✓		Ø 24 mm
25	**19607/8HPS**	350263S1	✓		✓	✓			✓	✓		
26	**95619**		✓		✓	✓			✓	✓		MS
27	**33786**	402645		✓	✓	✓			✓	✓		Ø 59,0mm

OPEL ASTRA G
VAUXHALL ASTRA Mk IV

02/98→10/05

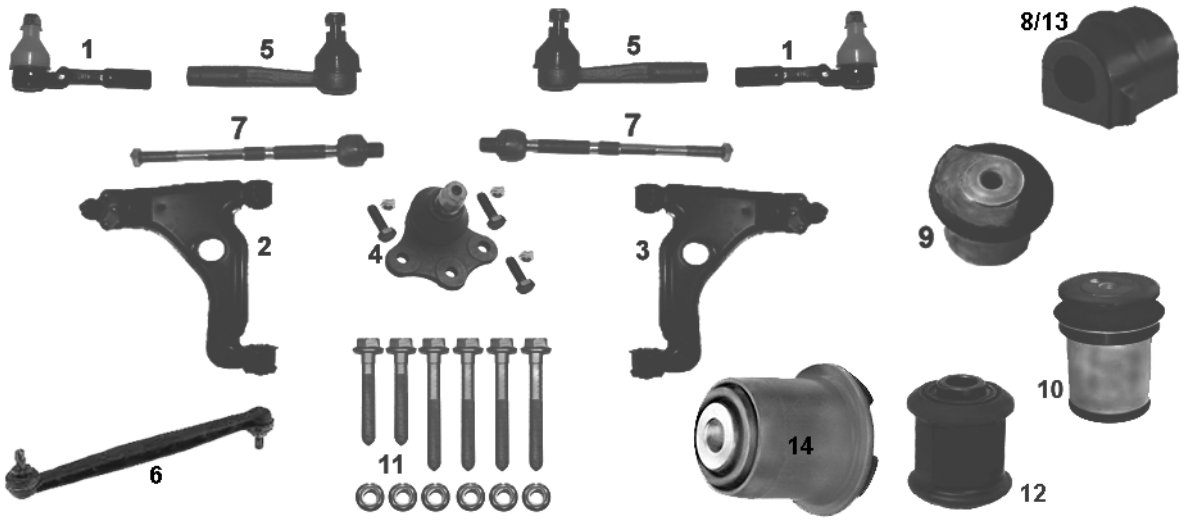

NR	MAPCO	REF								NEW	INFO
1	**19637**	1603214	✓		✓	✓			✓	✓		DELPHI
2	**19633**	5352016	✓		✓				✓	✓		
3	**19634**	5352017	✓			✓			✓	✓		
4	**19621**	352830	✓		✓	✓			✓	✓		
5	**19638**	1603215	✓		✓	✓			✓	✓		TRW
6	**19639**	350611	✓		✓	✓			✓	✓		
7	**49607**	1603216	✓		✓	✓			✓	✓		282mm
8	**33761**	0350138	✓		✓	✓			✓	✓		Ø 18mm
9	**33762**	5402634		✓	✓	✓			✓	✓		STOP **1.8 16V+2.0 16V**
10	**33767**	402644		✓	✓	✓			✓	✓		✓ **1.8 16V+2.0 16V**
11	**95633**		✓		✓	✓			✓	✓		MS
12	**33788**	352323	✓		✓	✓			✓	✓		
13	**33789**	350130	✓		✓	✓			✓	✓		Ø 16mm
14	**33794**	352365	✓		✓	✓			✓	✓		Ø 12mm
15	**53633**		✓		✓	✓			✓	✓	✓	 **axle Kit**

OPEL ASTRA H
VAUXHALL ASTRA Mk V

03/04→

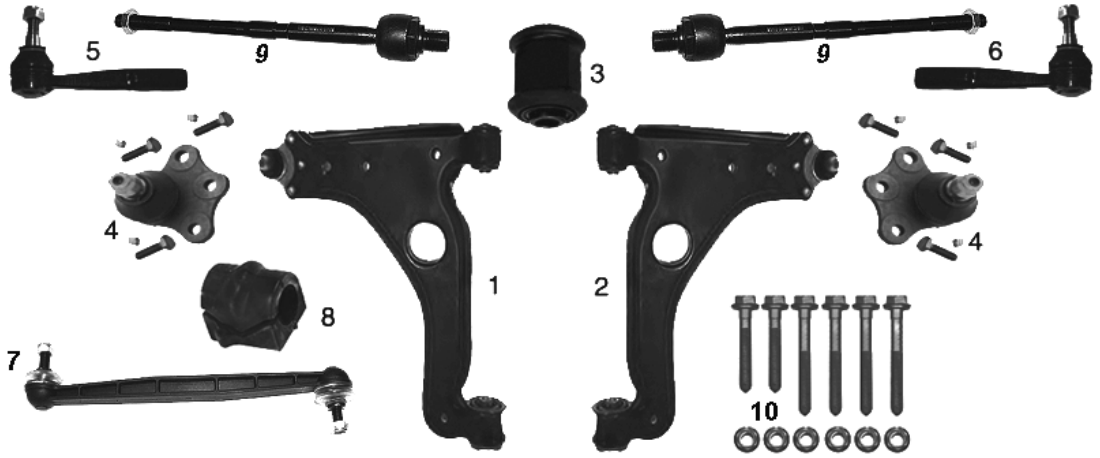

NR	MAPCO	REF								NEW	INFO
1	**49612**	5352029	✓		✓				✓	✓	
2	**49613**	5352030	✓			✓			✓	✓	
3	**33788**	352323	✓		✓	✓			✓	✓	
4	**19621**	352830	✓		✓	✓			✓	✓	
5	**49618**	1603258	✓		✓				✓	✓	M14x1,5
6	**49619**	1603257	✓			✓			✓	✓	M14x1,5
7	**19639**	350614	✓		✓	✓			✓	✓	300 mm
8	**36764**	350161	✓		✓	✓			✓	✓	
9	**49607**	1603256	✓		✓	✓			✓	✓	282mm
10	**95633**		✓		✓	✓			✓	✓	MS

OPEL CALIBRA (A)
VAUXHALL CALIBRA

1990→ 1997

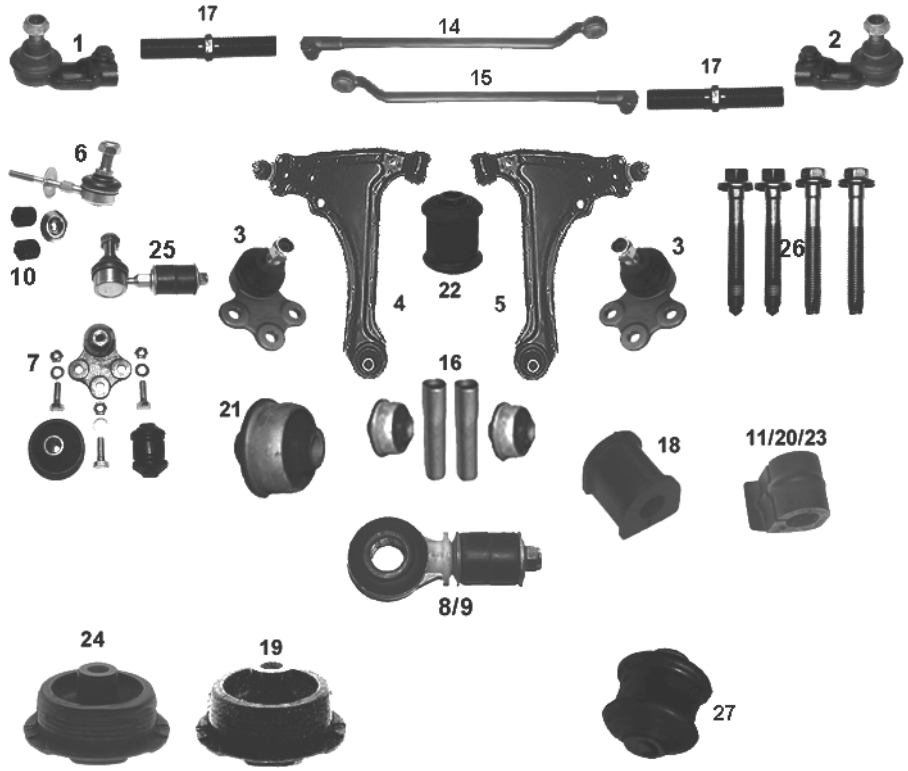

NR	MAPCO	REF								NEW	INFO
1	**19610**	324055	✓		✓				✓	✓		M16x2,0 RHT
2	**19611**	324056	✓			✓			✓	✓		M16x2,0 LHT
3	**19612**	1603167	✓		✓	✓			✓	✓		
4	**19619**	352193	✓		✓				✓	✓		Chassis R2595226→ STOP 16V + 4x4
5	**19620**	352192	✓			✓			✓	✓		Chassis R2595226→ STOP 16V + 4x4
6	**19607**	350263	✓		✓	✓			✓	✓		
7	**19270**		✓		✓	✓			✓	✓		Kit
8	**33726**	350260	✓		✓	✓			✓	✓		Ø 22 mm
9	**33727**	350261	✓		✓	✓			✓	✓		Ø 18 mm
10	**33728**		✓		✓	✓			✓	✓		**19607**
11	**33729**	350078	✓		✓	✓			✓	✓		Ø 22 mm
12	**49750**		✓		✓				✓	✓		**1 + 14 +17**
13	**49751**		✓			✓			✓	✓		**2 + 15 +17**
14	**49752**	322147	✓		✓				✓	✓		
15	**49753**	322146	✓			✓			✓	✓		
16	**33714/2**		✓		✓	✓			✓	✓		Kit
17	**49604**	322576	✓		✓	✓			✓	✓		
18	**33739**	444153		✓	✓	✓			✓	✓		Ø 14mm
19	**33754**	402937		✓	✓	✓			✓	✓		✓ 4X4
20	**33755**	350081	✓		✓	✓			✓	✓		Ø 18 mm
21	**33714**	352348	✓		✓	✓			✓	✓		
22	**33725**	352300	✓		✓	✓			✓	✓		
23	**33760**	350125	✓		✓	✓			✓	✓		Ø 24 mm
24	**33879**	402935		✓	✓	✓			✓	✓		STOP 4X4
25	**19607/8HPS**	350263	✓		✓	✓			✓	✓		
26	**95619**		✓		✓	✓			✓	✓		MS
27	**33787**	423313		✓	✓	✓			✓	✓		Ø 18 mm

OPEL CAMPO (TF_) 08/91→

NR	MAPCO	REF										INFO
1	**49616**	8-94459-464-1	✓		✓	✓		✓	✓	✓		 1

OPEL CORSA A 09/82 → 03/93


1


2

NR	MAPCO	REF										INFO
1	**36700**		✓		✓	✓			✓	✓		
2	**36701**		✓		✓	✓			✓	✓		

OPEL CORSA A - CORSA COMBO 09/82→12/92
VAUXHALL NOVA 09/82→12/92

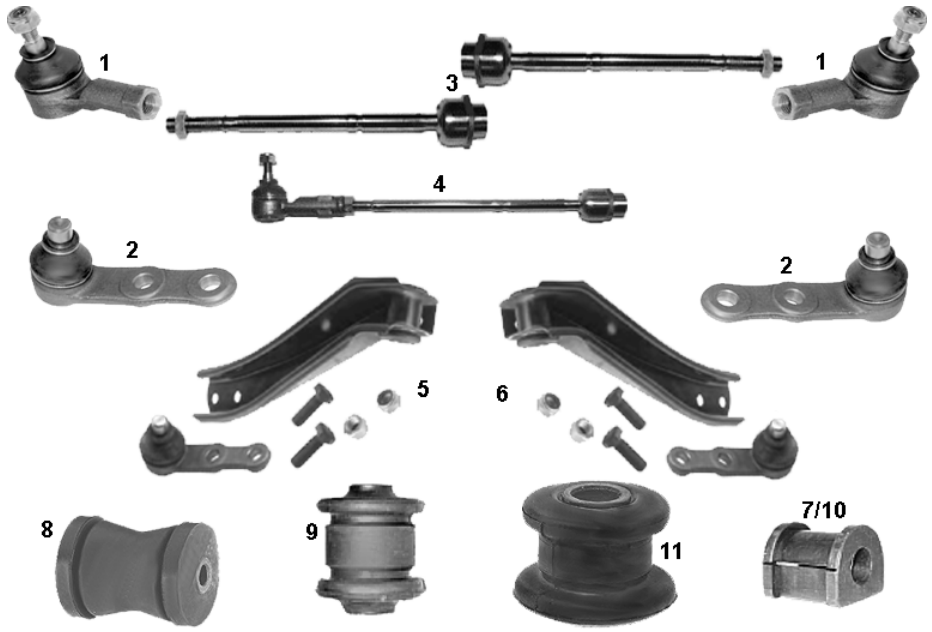

NR	MAPCO	REF										INFO
1	**19800**	324050	✓		✓	✓			✓	✓		M12x1,5RHT
2	**19801**	1603187	✓		✓	✓			✓	✓		
3	**19805**	322149	✓		✓	✓			✓	✓		M12x1,5RHT
4	**19805/1**		✓		✓	✓			✓	✓		**1+3**
5	**19806**	0352043	✓		✓				✓	✓		
6	**19807**	0352044	✓			✓			✓	✓		
7	**33735**	350109	✓		✓	✓			✓	✓		Ø 21,5mm
8	**33737**	402643		✓	✓	✓			✓	✓		
9	**33793**	352327	✓		✓	✓			✓	✓		Ø 10mm
10	**33740**	350109	✓		✓	✓			✓	✓		Ø 17mm
11	**33795**	353560	✓		✓	✓			✓	✓		Ø 14mm

OPEL CORSA B - CORSA B COMBO 1993→09/00

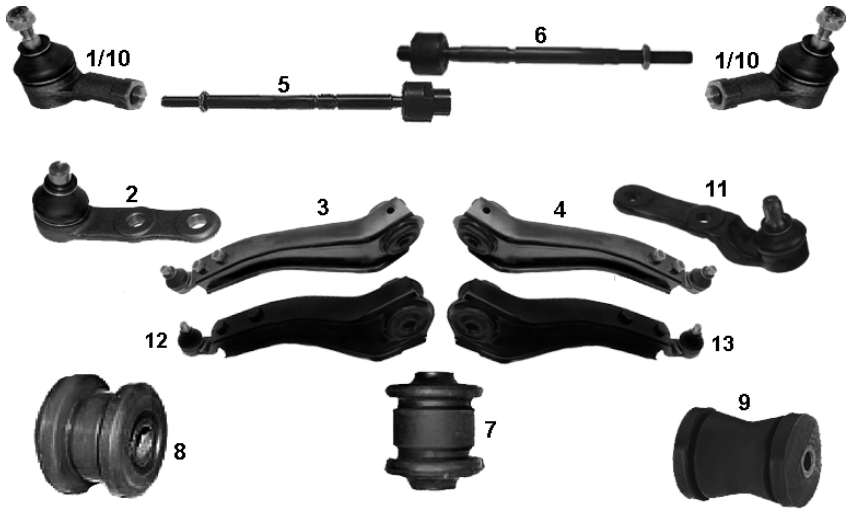

NR	MAPCO	REF								NEW	INFO
1	**19800**	324050	✓		✓	✓			✓	✓		→1996 M12x1,5RHT
2	**19801**	1603187	✓		✓	✓			✓	✓		→1996 ∅ 15mm
3	**19808**	352003	✓		✓				✓	✓		→1996
4	**19809**	352002	✓			✓			✓	✓		→1996
5	**49754**	322155	✓		✓	✓				✓		
6	**49755**	322158	✓		✓	✓			✓			
7	**33733**	352301	✓		✓	✓			✓	✓		
8	**33734**	353561	✓		✓	✓			✓	✓		
9	**33737**	402643		✓	✓	✓			✓	✓		
10	**19631**	324066	✓		✓	✓			✓	✓		1996→ M12 x 1,5 RHT
11	**19632**	1603202	✓		✓	✓			✓	✓		1996→ ∅ 15mm
12	**19635**	5352011	✓		✓				✓	✓		1996 →
13	**19636**	5352012	✓			✓			✓	✓		1996 →

OPEL CORSA C - CORSA C COMBO 09/00 →

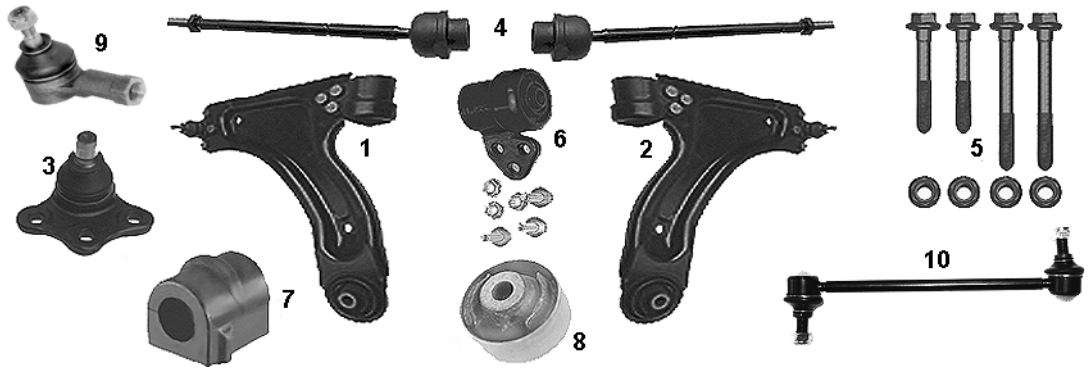

NR	MAPCO	REF								NEW	INFO
1	**49608**	352041	✓		✓				✓	✓		
2	**49609**	352042	✓			✓			✓	✓		
3	**49610**	352803	✓		✓	✓			✓	✓		
4	**19810**	1603008	✓		✓	✓			✓	✓		
5	**95608**		✓		✓	✓			✓	✓		MS
6	**33768**	352309	✓		✓	✓			✓	✓		
7	**33789**	350130	✓		✓	✓			✓	✓		Ø 16mm
8	**33796**	352310	✓		✓	✓			✓	✓		
9	**19800**	324050	✓		✓	✓			✓	✓		M12x1,5RHT
10	**19600HPS**	350610	✓		✓	✓			✓	✓		

OPEL CORSA D 07/06 →



NR	MAPCO	REF								NEW	INFO
1	**59012**	1603544	✓		✓				✓	✓		
2	**59013**	1603545	✓			✓			✓	✓		
3	**19097**	5352039	✓		✓				✓	✓		
4	**19098**	5352038	✓			✓			✓	✓		
5	**49092**	352067	✓		✓	✓			✓	✓		
6	**33044**	352380	✓		✓	✓			✓	✓		
7	**33045**	352864	✓		✓	✓			✓	✓		
8	**59026HPS**	350616	✓		✓	✓			✓	✓	✓	

OPEL FRONTERA A 1991 → 1998

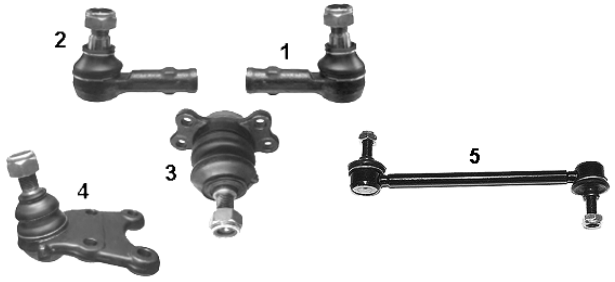

NR	MAPCO	REF								NEW	INFO
1	**49742**	324058	✓		✓	✓			✓	✓		M14 x 1,5LHT
2	**49743**	324057	✓		✓	✓			✓	✓		M14 x 1,5RHT
3	**49744**	310821	✓		✓	✓	✓		✓	✓		
4	**49745**	352828	✓		✓	✓		✓	✓	✓		
5	**51594HPS**	444065		✓	✓	✓			✓	✓		

OPEL INSIGNIA 07/08 →



NR	MAPCO	REF								NEW	INFO
1	**59770**	6606030	✓		✓	✓			✓	✓		
2	**49777**	350618	✓		✓	✓			✓	✓		
3	**49778**	444081		✓	✓	✓			✓	✓	✓	STR
4	**49779**	444087		✓	✓	✓			✓	✓		

OPEL FRONTERA B

10/98 →

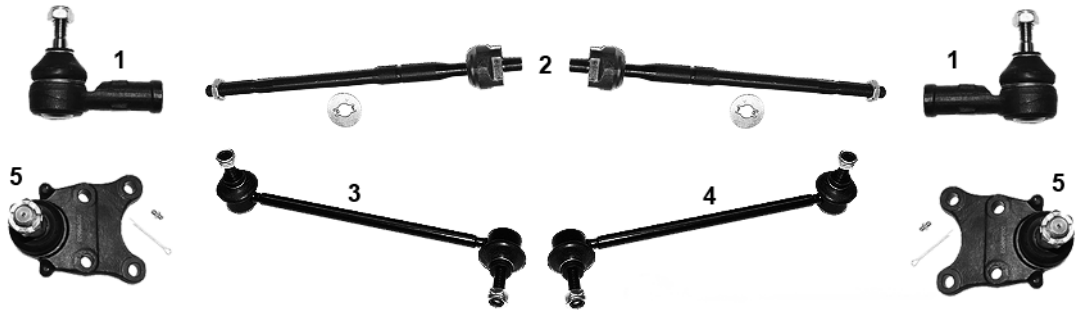

NR	MAPCO	REF									NEW	INFO
1	**49626**	900907	✓		✓	✓			✓	✓		M14x1,5
2	**49603**	900905	✓		✓	✓			✓	✓		M14x1,5 RHT
3	**19811HPS**	350607	✓		✓				✓	✓		
4	**59849**	350608	✓			✓			✓	✓		
5	**49745**	352828	✓		✓	✓		✓	✓	✓		

OPEL KADETT D
VAUXHALL ASTRA CC

09/79→ 08/84



NR	MAPCO	REF									NEW	INFO
1	**19710**	324036	✓		✓				✓	✓		→ 09/81 M16x1,5RHT
2	**19711**	324037	✓			✓			✓	✓		→ 09/81 M16x1,5RHT
3	**59367**	07846696	✓		✓	✓			✓	✓		
4	**49756**	352147	✓		✓				✓	✓		10/81→ 09/84
5	**49757**	352148	✓			✓			✓	✓		10/81→ 09/84
6	**19714**	1603164	✓		✓	✓			✓	✓		10/81→
8	**33752**	352349	✓		✓	✓			✓	✓		
7	**33757**	352335	✓		✓	✓			✓	✓		
9	**33785**	402642		✓	✓	✓			✓	✓		Ø 48,0mm

OPEL KADETT E
VAUXHALL CAVALIER Mk II

09/84→ 1990

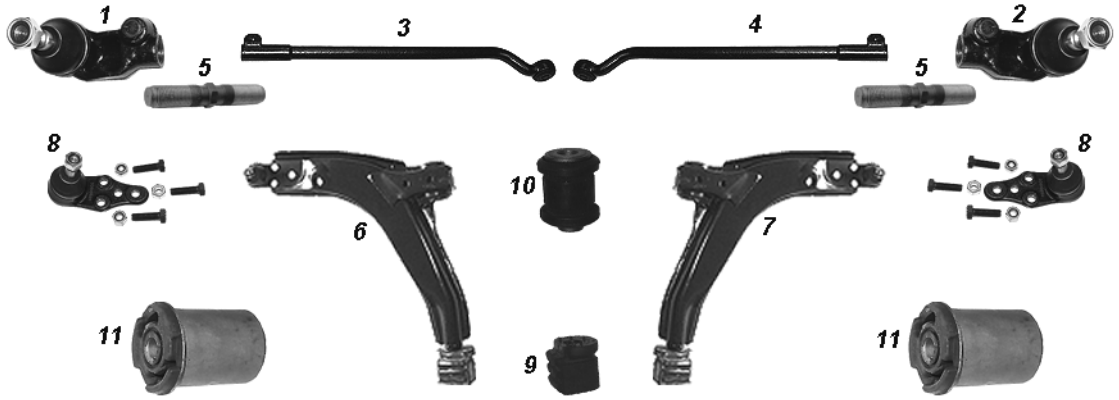

NR	MAPCO	REF								NEW	INFO
1	**19718**	324039	✓		✓				✓	✓	M16x1,5RHT
2	**19719**	324038	✓			✓			✓	✓	M16x1,5LHT
3	**59295**	322125	✓		✓				✓	✓	
4	**59296**	322126	✓			✓			✓	✓	
5	**59367**	07846696	✓		✓	✓			✓	✓	
6	**49756**	352169	✓		✓				✓	✓	
7	**49757**	352170	✓			✓			✓	✓	
8	**19714**	1603164	✓		✓	✓			✓	✓	
9	**33757**	352335	✓		✓	✓			✓	✓	
10	**33752**	352349	✓		✓	✓			✓	✓	
11	**33785**	402642		✓	✓	✓			✓	✓	Ø 48,0mm

OPEL MERIVA

05/03 →

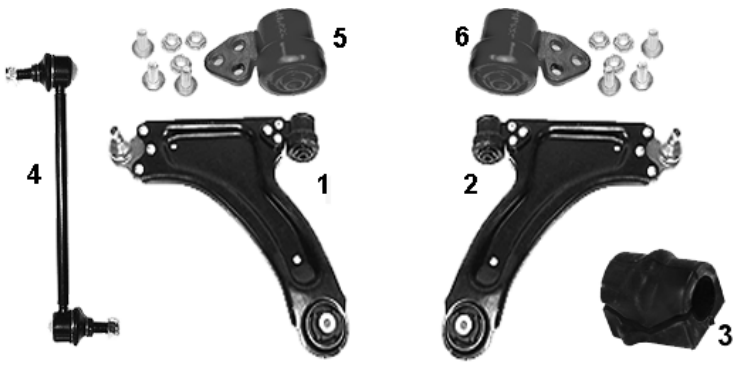

NR	MAPCO	REF								NEW	INFO
1	**49614**	5352027	✓		✓	✓		✓	✓	✓	
2	**49615**	5352028	✓		✓	✓		✓	✓	✓	
3	**33764**	350161	✓		✓	✓		✓	✓	✓	
4	**19600HPS**	350610	✓		✓	✓			✓	✓	
5	**33768**	352309	✓		✓	✓			✓	✓	
6	**33796**	352310	✓		✓	✓			✓	✓	

OPEL MONTEREY A (UBS_)

09/91→07/98

NR	MAPCO	REF								NEW	INFO
1	**51594HPS**	444065		✓	✓	✓			✓	✓	 1

OPEL MONTEREY B 07/98→08/99



NR	MAPCO	REF			←	→	↑	↓			NEW	INFO
1	**19811HPS**	350607	✓		✓				✓	✓		
2	**59849**	350608	✓			✓			✓	✓		
3	**51594HPS**	444065		✓	✓	✓			✓	✓		

OPEL MOVANO (J9) 07/98 →

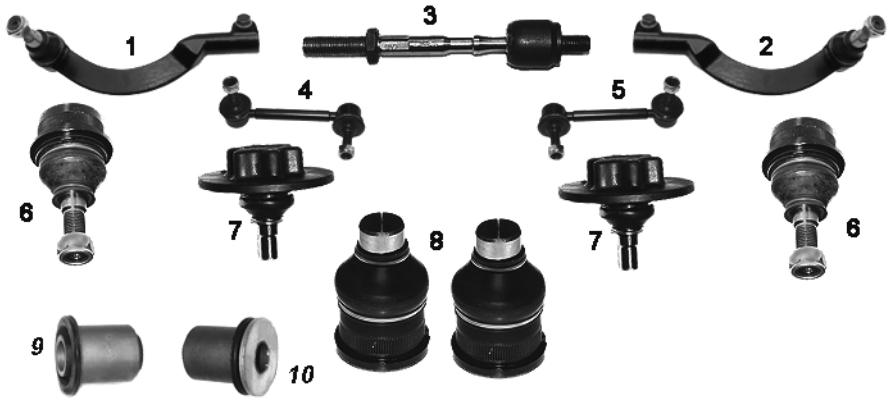

NR	MAPCO	REF			←	→	↑	↓			NEW	INFO
1	**49137**	4501262	✓		✓				✓	✓		(M16x1,5RHT) 225mm
2	**49138**	4501263	✓			✓			✓	✓		(M16x1,5RHT) 225mm
3	**49125**	450261	✓		✓	✓			✓	✓		150mm
4	**49109HPS**	4500198	✓		✓				✓	✓		
5	**49108HPS**	4500199	✓			✓			✓	✓		
6	**49110**	4500254	✓		✓	✓	✓		✓	✓		aussen/ outer
7	**49156**	4401910	✓		✓	✓			✓	✓		Innen/ inner
8	**49111**	4401909	✓		✓	✓		✓	✓	✓		
9	**36704**	4500094	✓		✓	✓		✓	✓	✓		
10	**36705**	09160395	✓		✓	✓		✓	✓	✓		hinten/

OPEL OMEGA A - SENATOR B
VAUXHALL CARLTON MK III/ SENATOR

08/86→ 1993

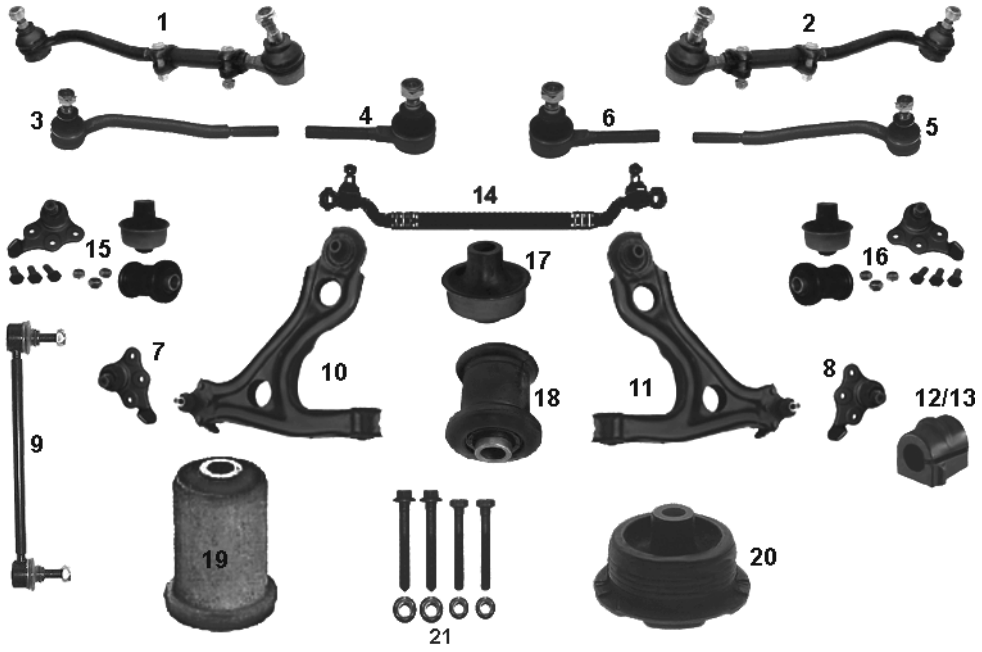

NR	MAPCO	REF			←	→	↑	↓			NEW	INFO
1	**19803/1**	322142	✓		✓				✓	✓		
2	**19804/1**	322143	✓			✓			✓	✓		
3	**19613**	322175	✓		✓				✓	✓		M14x1,5RHT
4	**19615**	322171	✓			✓			✓	✓		M14x1,5LHT
5	**19614**	322176	✓			✓			✓	✓		M14x1,5LHT
6	**19616**	322172	✓		✓				✓	✓		M14x1,5RHT
7	**19617**	352826	✓		✓				✓	✓		
8	**19618**	352827	✓			✓			✓	✓		
9	**19602HPS**	350605	✓		✓	✓			✓	✓		
10	**19624**	352135	✓		✓				✓	✓		
11	**19625**	352136	✓			✓			✓	✓		
12	**33791**	350147	✓		✓	✓			✓	✓		Ø innen/ inner 23 mm
13	**33730**	350116	✓		✓	✓			✓	✓		Ø innen/ inner 22 mm
14	**49760**	322139	✓		✓	✓			✓			
15	**19217**		✓		✓				✓	✓		Kit
16	**19218**		✓			✓			✓	✓		Kit
17	**33715**	352355	✓		✓	✓			✓	✓		
18	**33716**	352341	✓		✓	✓			✓	✓		
19	**33895**	423315		✓	✓	✓			✓	✓		
20	**33879**	402935		✓	✓	✓			✓	✓		
21	**95624**		✓		✓	✓			✓	✓		MS

OPEL OMEGA B
VAUXHALL OMEGA

03/94→ 07/03

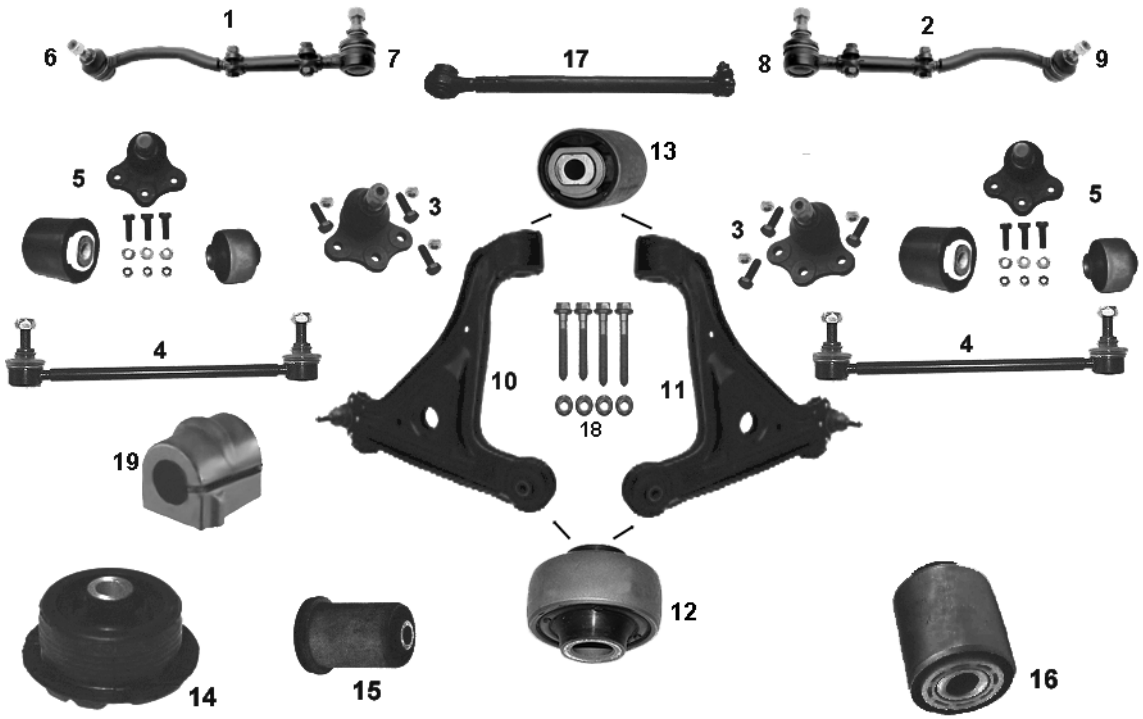

NR	MAPCO	REF								NEW	INFO
1	**19812**	322169	✓		✓				✓	✓	
2	**19813**	322168	✓			✓			✓	✓	
3	**19621**	352830	✓		✓	✓			✓	✓	
4	**19606HPS**	350609	✓		✓	✓			✓	✓	
5	**19221**		✓		✓	✓			✓	✓	Kit
6	**49758**	324059	✓		✓				✓	✓	M14 x 1,5RHT
7	**49600**	324061	✓		✓				✓	✓	M14 x 1,5LHT
8	**49601**	324062	✓			✓			✓	✓	M14 x 1,5RHT
9	**49759**	324060	✓			✓			✓	✓	M14 x 1,5LHT
10	**19629**	352007	✓		✓				✓	✓	
11	**19630**	352008	✓			✓			✓	✓	
12	**33848**	352457	✓		✓	✓			✓	✓	
13	**33849**	352458	✓		✓	✓			✓	✓	
14	**33753**	402942		✓	✓	✓			✓	✓	
15	**33895**	423315		✓	✓	✓			✓	✓	
16	**33766**	402649		✓	✓	✓			✓	✓	
17	**49605**	423017		✓	✓	✓			✓	✓	M16x1,50LHT
18	**95629**		✓		✓	✓			✓	✓	MS
19	**33791**	350147	✓		✓	✓			✓	✓	Ø 23mm

OPEL REKORD / VAUXHALL CARLTON II
OPEL COMMODORE
OPEL MONZA - SENATOR

09/77→ 1986
09/77→ 1982
1977→ 08/86

NR	MAPCO	REF								NEW	INFO
1	**19816**	352823	✓		✓	✓			✓	✓	 1

OPEL SIGNUM
VAUXHALL SIGNUM

05/03→

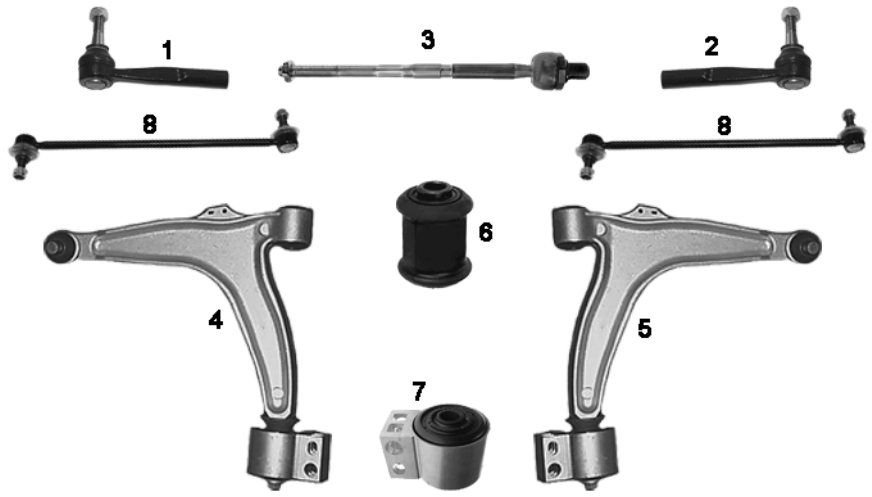

NR	MAPCO	REF								NEW	INFO
1	**49620**	1603227	✓		✓				✓	✓		M14x1,5
2	**49621**	1603228	✓			✓			✓	✓		M14x1,5
3	**49622**	1603415	✓		✓	✓			✓	✓		M14x1,5 283 mm
4	**49623**	352051	✓		✓				✓	✓		
5	**49624**	352052	✓			✓			✓	✓		
6	**33788**	352323	✓		✓	✓			✓	✓		
7	**36703**	352319	✓		✓	✓			✓	✓	✓	
8	**49749HPS**	0350603	✓		✓	✓			✓	✓		

OPEL TIGRA

07/94→

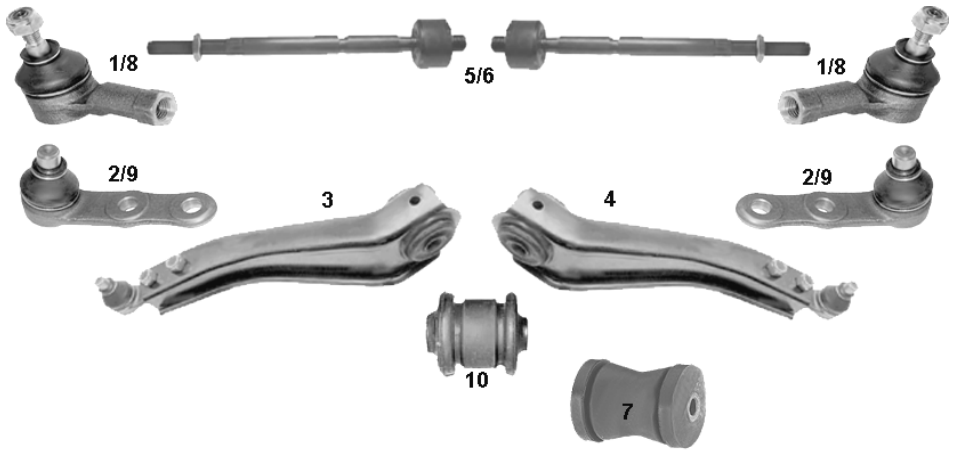

NR	MAPCO	REF								NEW	INFO
1	**19800**	352050	✓		✓	✓			✓	✓		→1996 M12 X1,5RHT
2	**19801**	1603187	✓		✓	✓			✓	✓		→1996
3	**19808**	352003	✓		✓				✓	✓		
4	**19809**	352002	✓			✓			✓	✓		
5	**49754**	322155	✓		✓	✓				✓		
6	**49755**	352158	✓		✓	✓			✓			
7	**33737**	402643		✓	✓	✓			✓	✓		
8	**19631**	324066	✓		✓	✓			✓	✓		1996→ M12 x 1,5 RHT
9	**19632**	1603202	✓		✓	✓			✓	✓		1996→
10	**33733**	352301	✓		✓	✓			✓	✓		

OPEL VECTRA A
VAUXHALL CAVALIER

09/88→ 1995

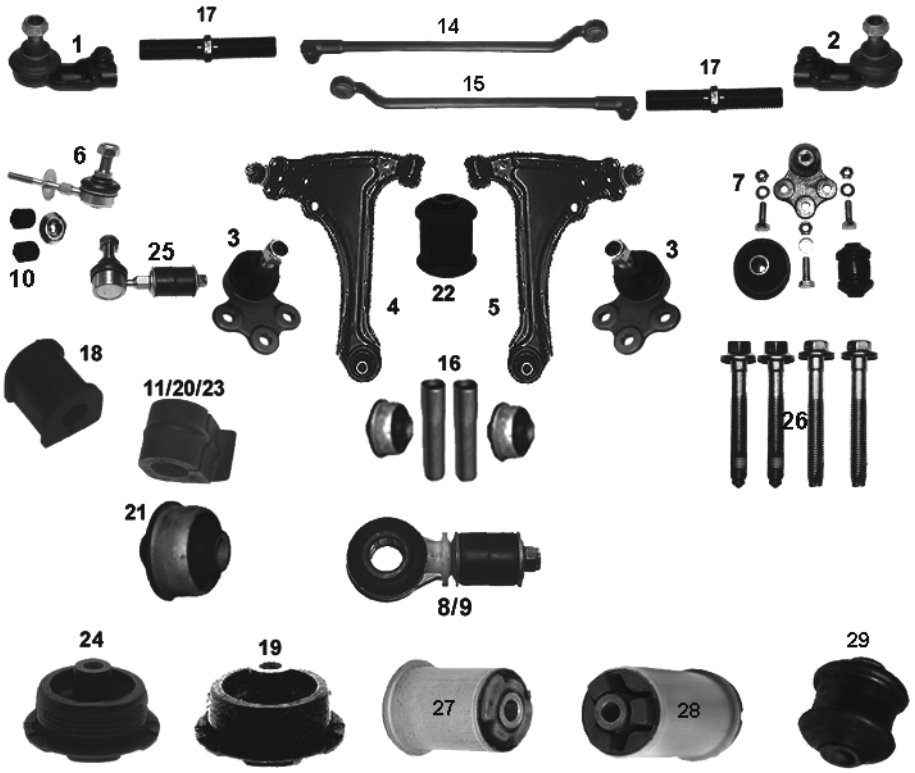

NR	MAPCO	REF								NEW	INFO
1	**19610**	324055	✓		✓				✓	✓	M16x2,0 RHT
2	**19611**	324056	✓			✓			✓	✓	M16x2,0 LHT
3	**19612**	1603167	✓		✓	✓			✓	✓	
4	**19619**	352193	✓		✓				✓	✓	Chassis R2595226→ STOP 16V + 4x4
5	**19620**	352192	✓			✓			✓	✓	Chassis R2595226→ STOP 16V + 4x4
6	**19607**	350263	✓		✓	✓			✓	✓	
7	**19270**		✓		✓	✓			✓	✓	Kit
8	**33726**	350260	✓		✓	✓			✓	✓	Ø 22 mm
9	**33727**	350261	✓		✓	✓			✓	✓	Ø 18 mm
10	**33728**		✓		✓	✓			✓	✓	**19607**
11	**33729**	350078	✓		✓	✓			✓	✓	Ø 22 mm
12	**49750**		✓		✓				✓	✓	**1 + 14 +17**
13	**49751**		✓			✓			✓	✓	**2 + 15 +17**
14	**49752**	322147	✓		✓				✓	✓	
15	**49753**	322146	✓			✓			✓	✓	
16	**33714/2**		✓		✓	✓			✓	✓	Kit
17	**49604**	322576	✓		✓	✓			✓	✓	
18	**33739**	444153		✓	✓	✓			✓	✓	Ø 14mm
19	**33754**	402937		✓	✓	✓			✓	✓	✓ 4X4
20	**33755**	350081	✓		✓	✓			✓	✓	Ø 18 mm
21	**33714**	352348	✓		✓	✓			✓	✓	
22	**33725**	352300	✓		✓	✓			✓	✓	
23	**33760**	350125	✓		✓	✓			✓	✓	Ø 24 mm
24	**33879**	402935		✓	✓	✓			✓	✓	STOP 4X4
25	**19607/8HPS**	350263	✓		✓	✓			✓	✓	
26	**95619**		✓		✓	✓			✓	✓	MS
27	**33785**	402642		✓	✓	✓			✓	✓	Ø 48,0mm
28	**33786**	402645		✓	✓	✓			✓	✓	Ø 59,0mm
29	**33787**	423313		✓	✓	✓			✓	✓	Ø 18 mm

OPEL VECTRA B
VAUXHALL VECTRA

1996→ 2000

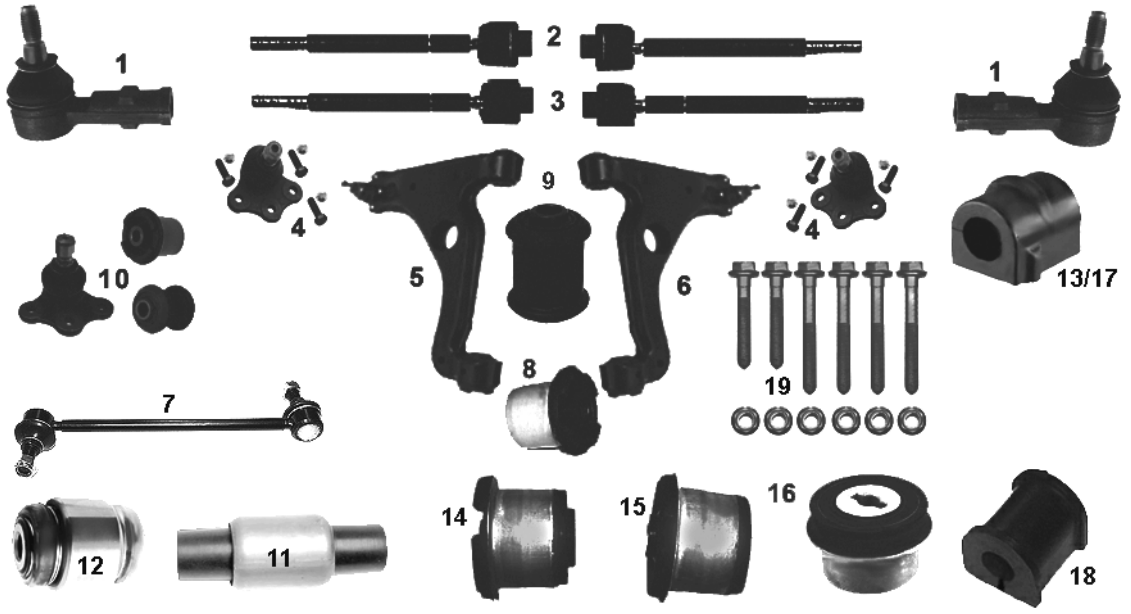

NR	MAPCO	REF								NEW	INFO
1	**19626**	324063	✓		✓	✓			✓	✓		M14 x 1,5RHT
2	**19627**	1603199	✓		✓	✓			✓	✓		365mm **SAGINAW**
3	**19628**	1603198	✓		✓	✓			✓	✓		322mm **ZF**
4	**19621**	352830	✓		✓	✓			✓	✓		
5	**19622**	5352005	✓		✓				✓	✓		
6	**19623**	5352004	✓			✓			✓	✓		
7	**19600HPS**	350610	✓		✓	✓			✓	✓		M12 x 1,5
8	**33731**	352358	✓		✓	✓			✓	✓		
9	**33732**	352357	✓		✓	✓			✓	✓		
10	**19271**		✓		✓	✓			✓	✓		Kit
11	**33736**	423316		✓	✓	✓			✓	✓		
12	**33877**	423121		✓	✓	✓			✓	✓		
13	**33739**	444153		✓	✓	✓			✓	✓		Ø 14mm
14	**33756**	5402631		✓	✓	✓			✓	✓		Ø 64mm
15	**33758**	5402630		✓	✓	✓			✓	✓		Ø 67mm
16	**33720**	423318		✓	✓	✓			✓	✓		Ø 60mm
17	**33789**	350130	✓		✓	✓			✓	✓		Ø 16mm
18	**33792**	444200		✓	✓	✓			✓	✓		Ø 16mm
19	**95633**		✓		✓	✓			✓	✓		MS

OPEL VECTRA C
VAUXHALL VECTRA Mk II

04/02→

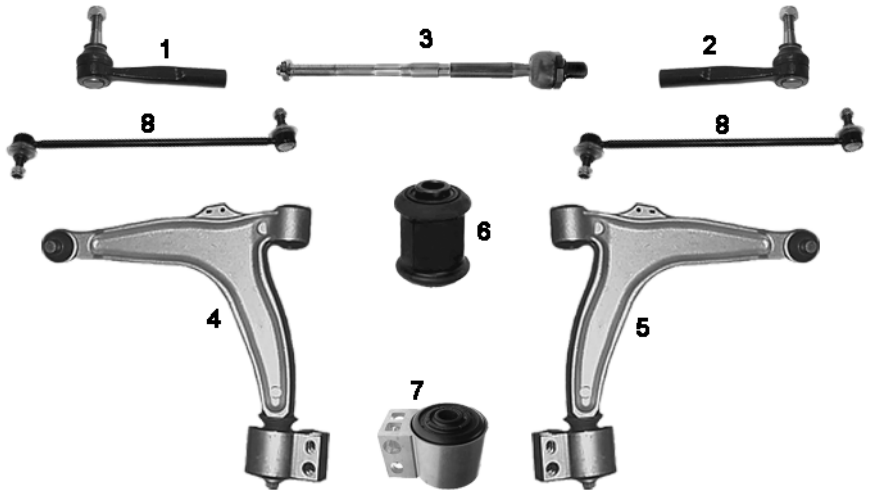

NR	MAPCO	REF								NEW	INFO
1	**49620**	1603227	✓		✓				✓	✓		M14x1,5
2	**49621**	1603228	✓			✓			✓	✓		M14x1,5
3	**49622**	1603415	✓		✓	✓			✓	✓		M14x1,5 283 mm
4	**49623**	352051	✓		✓				✓	✓		
5	**49624**	352052	✓			✓			✓	✓		
6	**33788**	352323	✓		✓	✓			✓	✓		
7	**36703**	352319	✓		✓	✓			✓	✓	✓	
8	**49749HPS**	0350603	✓		✓	✓			✓	✓		

OPEL VIVARO

08/01→

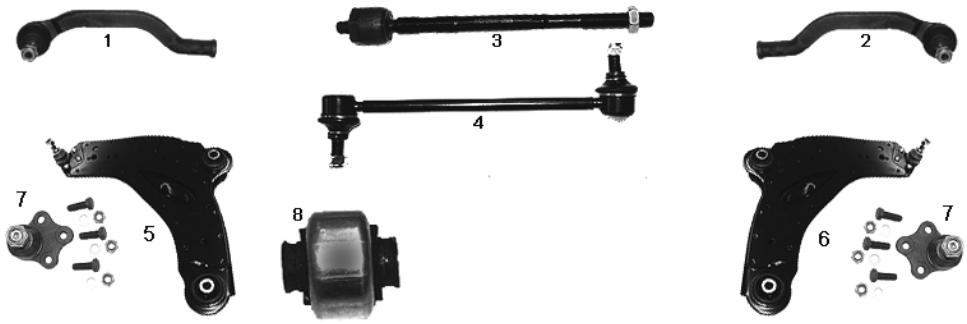

NR	MAPCO	REF								NEW	INFO
1	**49143**	4408510	✓		✓				✓	✓		
2	**49144**	4408511	✓			✓			✓	✓		
3	**49155**	4408474	✓		✓	✓			✓	✓		280,0 mm
4	**49118HPS**	4408904	✓		✓	✓			✓	✓		
5	**49141**	4408958	✓		✓			✓	✓	✓		
6	**49142**	4408959	✓			✓		✓	✓	✓		
7	**49140**	4412934	✓		✓	✓		✓	✓	✓		
8	**33122**	4408958	✓		✓	✓			✓	✓		

OPEL ZAFIRA
VAUXHALL ZAFIRA

04/99→ 06/05

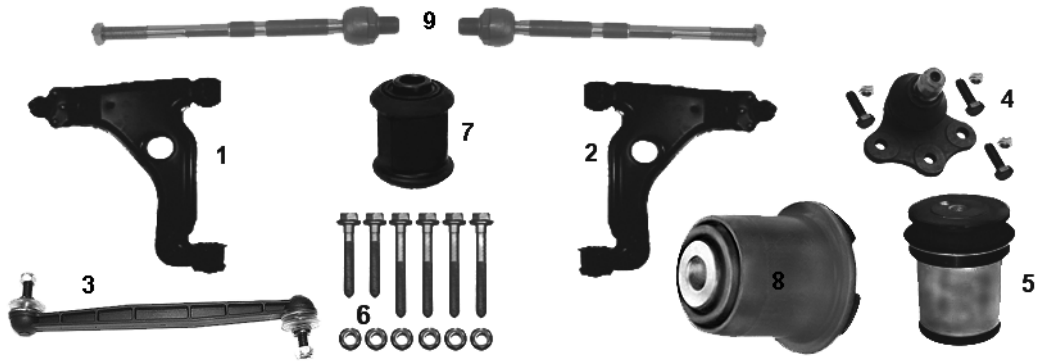

NR	MAPCO	REF			←	→	↑	↓			NEW	INFO
1	**19633**	5352016	✓		✓				✓	✓		
2	**19634**	5352017	✓			✓			✓	✓		
3	**19639**	350611	✓		✓	✓			✓	✓		
4	**19621**	352830	✓		✓	✓			✓	✓		
5	**33767**	402 644		✓	✓	✓			✓	✓		
6	**95633**		✓		✓	✓			✓	✓		MS
7	**33788**	352323	✓		✓	✓			✓	✓		
8	**33794**	352365	✓		✓	✓			✓	✓		Ø 12mm
9	**49607**	1603213	✓		✓	✓			✓	✓		

VERGLEICHSNUMMERN DIENEN NUR ZUR BESSEREN IDENTIFIKATION UND DÜRFEN NICHT AUF RECHNUNGEN ERSCHEINEN!!!
Reference numbers are used for better identification only !
Références d´origine pour meilleure identification seulement !

PEUGEOT

PEUGEOT 106 I **09/91→ 04/96**
PEUGEOT 106 II **05/96→**

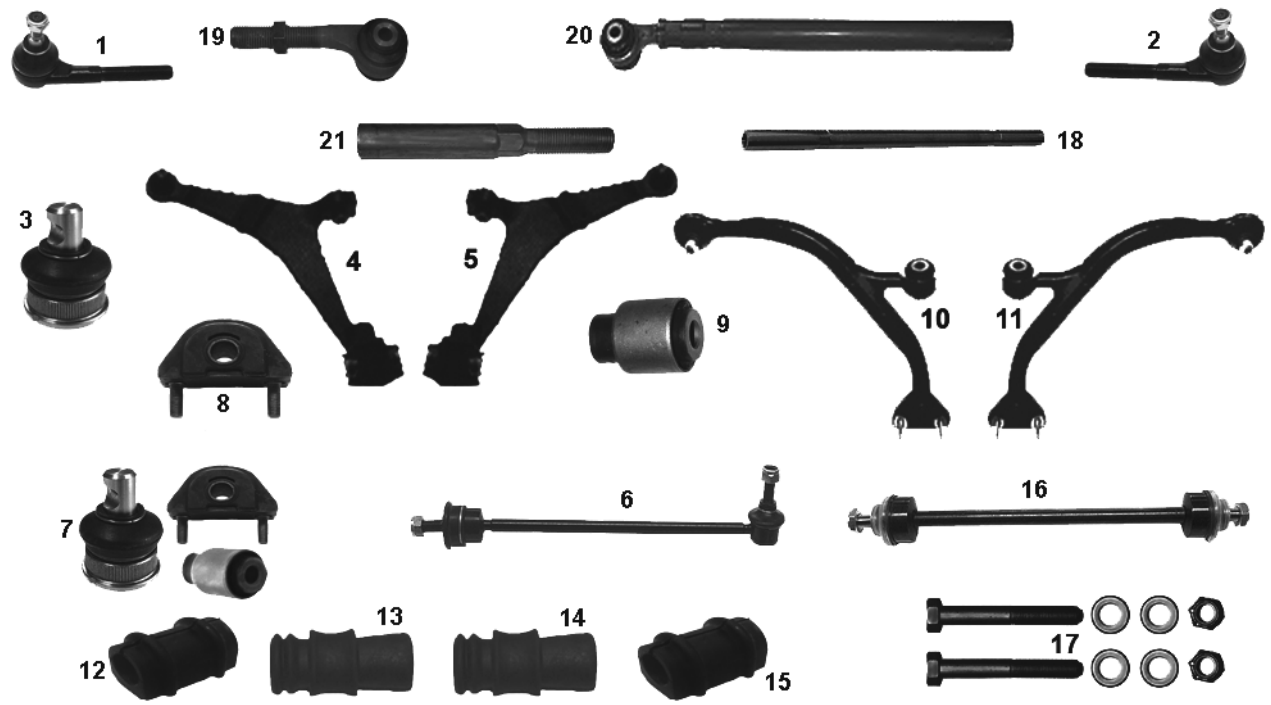

NR	MAPCO	REF								NEW	INFO
1	**19417**	3817.41	✓		✓				✓	✓		M14x1,5RHT
2	**19418**	3817.42	✓			✓			✓	✓		M14x1,5RHT
3	**19428**	3640.36	✓		✓	✓			✓	✓		Ø 16 mm
4	**19321**	3520.78	✓		✓				✓	✓		STOP 1.6 Ø 16 mm
5	**19322**	3520.79	✓			✓			✓	✓		STOP 1.6 Ø 16 mm
6	**19338HPS**	5087.40	✓		✓	✓			✓	✓		
7	**19228**		✓		✓	✓			✓	✓		Kit
8	**33313**	3523.51	✓		✓	✓			✓	✓		
9	**33314**	3523.50	✓		✓	✓			✓	✓		
10	**19360**	3520.80	✓		✓				✓	✓		✓ 1.6
11	**19361**	3520.81	✓			✓			✓	✓		✓ 1.6
12	**33323**	5094.57	✓		✓	✓			✓	✓		Ø 21mm 1991 →
13	**33324**	5094.59	✓		✓	✓			✓	✓		Ø 19mm 1991 →
14	**33325**	5094.60	✓		✓	✓			✓	✓		Ø 20mm 1991 →
15	**33420**	5094.56	✓		✓	✓			✓	✓		Ø 19mm 1991 →
16	**19476HPS**	5087.33	✓		✓	✓			✓	✓		→04/96 300 mm
17	**95321**		✓		✓	✓			✓	✓		MS
18	**19480**	3812.A0	✓		✓	✓			✓	✓		M14x1,5
19	**19481**	3817.32	✓		✓					✓		M14x1,5LHT
20	**19482**	3817.35	✓			✓				✓		M14x1,5LHT
21	**19483**	3817.34	✓		✓	✓				✓		12,0mm, M14x1,5RHT, 132,0mm
22	**36402**		✓		✓	✓			✓	✓		 22

PEUGEOT 1007 04/05→

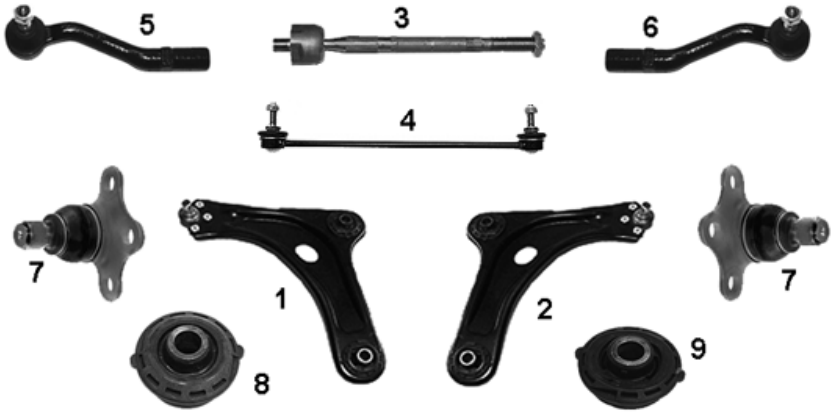

NR	MAPCO	REF								NEW	INFO
1	**19385**	3520.L9	✓		✓				✓	✓		
2	**19386**	3521.J1	✓			✓			✓	✓		
3	**19479**	3812.E1	✓		✓	✓			✓	✓		
4	**19348HPS**	5087.45	✓		✓	✓			✓	✓		
5	**19489**	3817.55	✓		✓				✓	✓		
6	**19490**	3817.56	✓			✓			✓	✓		
7	**19491**	3640.56	✓		✓	✓			✓	✓		
8	**33334**	3523.AA	✓		✓	✓			✓	✓		Ø 55,2mm
9	**33335**	3523.98	✓		✓	✓			✓	✓		Ø 55,5mm

PEUGEOT 107 06/05→

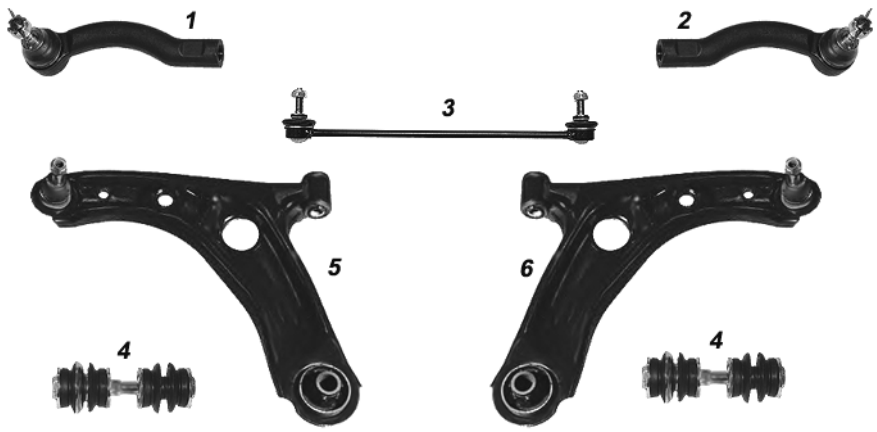

NR	MAPCO	REF								NEW	INFO
1	**49306**	3817.63	✓		✓				✓	✓	✓	
2	**49307**	3817.64	✓			✓			✓	✓	✓	
3	**19348HPS**	5087.59	✓		✓	✓			✓	✓		335,0 mm
4	**49308**	5091.10	✓		✓	✓			✓	✓	✓	
5	**49318**	3520.Q2	✓		✓				✓	✓	✓	
6	**49319**	3521.L3	✓			✓			✓	✓	✓	

PEUGEOT 205 STOP GTi, Rallye, TD — 08/83 → 12/99

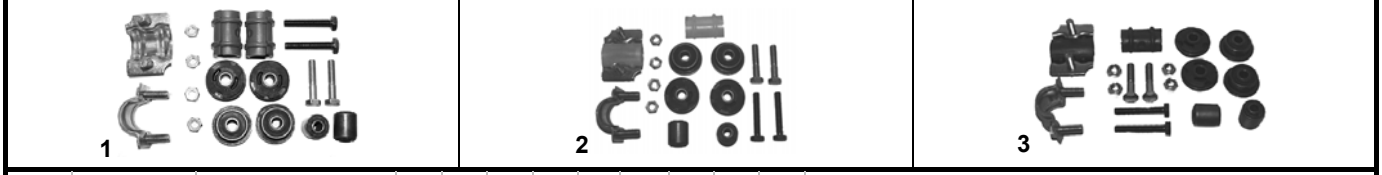

NR	MAPCO	REF			←	→	↑	↓			NEW	INFO
1	36403		✓		✓	✓			✓	✓		
2	36305		✓		✓	✓			✓	✓		
3	36304		✓		✓	✓			✓	✓		

PEUGEOT 205 ✓GTi, Rallye, TD — 08/83 → 12/99

NR	MAPCO	REF			←	→	↑	↓			NEW	INFO
1	36310		✓		✓	✓			✓	✓		 1

PEUGEOT 205 — 01/83→ 09/98

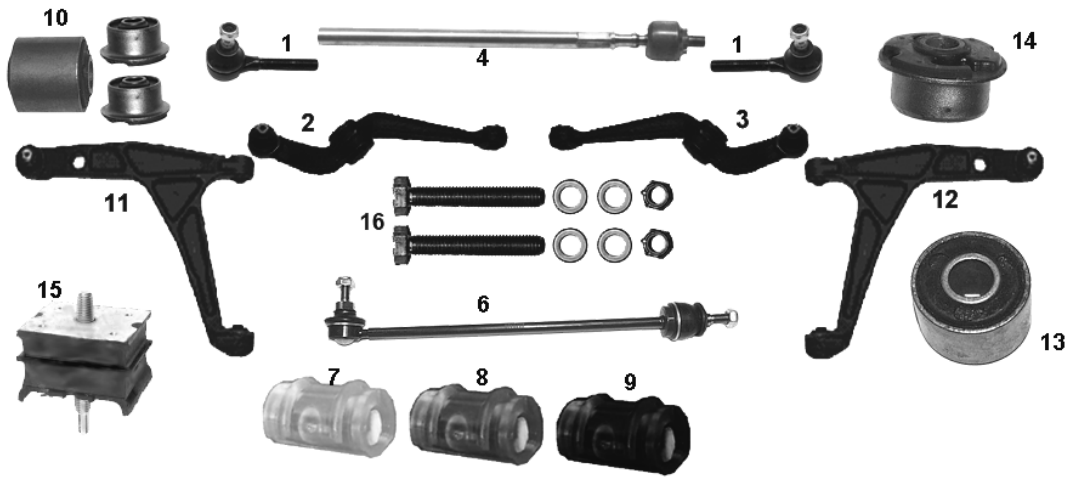

NR	MAPCO	REF			←	→	↑	↓			NEW	INFO
1	**19301**	3817.18	✓		✓	✓			✓	✓		M14x1,5RHT
2	**19310**	3520.51	✓		✓				✓	✓		STOP Gti
3	**19311**	3521.34	✓			✓			✓	✓		STOP Gti
4	**19410**	3812.25	✓		✓	✓			✓	✓		M14x1,5 RHT 314,0 mm
5	**19446**	3812.32	✓		✓	✓			✓	✓		**1 + 4**
6	**19339HPS**	5087.32	✓		✓	✓			✓	✓		✓ Gti
7	**33311**	5094.36	✓		✓	✓			✓	✓		Ø20mm
8	**33311/1**	5094.37	✓		✓	✓			✓	✓		Ø22mm
9	**33311/2**	5094.40	✓		✓	✓			✓	✓		Ø23mm
10	**19206**		✓		✓	✓			✓	✓		Kit
11	**19349**	3520.55	✓		✓				✓	✓		✓ Gti
12	**19350**	3521.38	✓			✓			✓	✓		✓ Gti
13	**33307**	3523.20	✓		✓	✓			✓	✓		
14	**33306**	3523.49	✓		✓	✓			✓	✓		Ø28mm
15	**33327**	5151.10		✓	✓	✓			✓	✓		
16	**95310**		✓		✓	✓			✓	✓		STOP Gti MS

PEUGEOT 206 (A/C) 09/98→



NR	MAPCO	REF								NEW	INFO
1	**19417**	3817.41	✓		✓				✓	✓		M14x1.5 RHT
2	**19418**	3817.42	✓			✓			✓	✓		M14x1.5 RHT
3	**19346**	3520.G8	✓		✓				✓	✓		✓ 1.4 16V, 1.6 HDi **Chassis → 09440**
4	**19347**	3521.C8	✓			✓			✓	✓		✓ 1.4 16V, 1.6 HDi **Chassis → 09440**
5	**19348HPS**	5087.45	✓		✓	✓			✓	✓		
6	**33316**	3523.76	✓		✓	✓			✓	✓		STOP 1.4 16V, 1.6 HDi
7	**33317**	3523.77	✓		✓	✓			✓	✓		STOP 1.6 16V, 2.0 16V, 1.6 HDi
8	**19373**	3812.C5	✓		✓	✓			✓	✓		M14 x1,5RHT
9	**33303**	5131.94		✓	✓	✓			✓	✓		
10	**19398**	3520.L7	✓		✓				✓	✓		✓ 1.4 16V, 1.6 HDi **Chassis 09441 →**
11	**19399**	3521.H9	✓			✓			✓	✓		✓ 1.4 16V, 1.6 HDi **Chassis 09441 →**
12	**33315**	3523.80	✓		✓	✓			✓	✓		✓ 1.6 16V, 2.0 16V, 1.6 HDi
13	**33340**	3523.AG	✓		✓	✓			✓	✓		✓ 1.4 16V, 1.6 HDi

PEUGEOT 206 CC 09/00→
PEUGEOT 206 SW 07/02→



NR	MAPCO	REF								NEW	INFO
1	**33303**	5131.94		✓	✓	✓			✓	✓		
2	**49301**	3520.P2	✓		✓				✓	✓		✓ CC
3	**49302**	3521.K2	✓			✓			✓	✓		✓ CC

PEUGEOT 207 02/06→

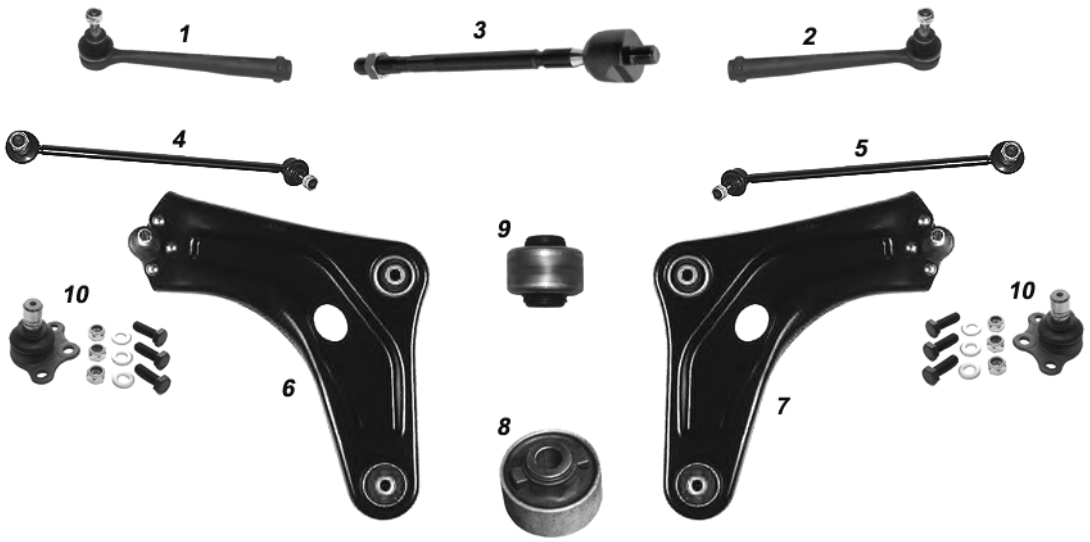

NR	MAPCO	REF									NEW	INFO
1	**49312**	3817.67	✓		✓				✓	✓	✓	
2	**49313**	3817.68	✓			✓			✓	✓	✓	
3	**49314**	3812.E8	✓		✓	✓			✓	✓	✓	
4	**49304HPS**	5087.54	✓		✓				✓	✓	✓	330,0 mm
5	**49305HPS**	5087.55	✓			✓			✓	✓	✓	330,0 mm
6	**49310**	3520.R7	✓		✓				✓	✓	✓	
7	**49311**	3521.N8	✓			✓			✓	✓	✓	
8	**33435**	3523.CC	✓		✓	✓			✓	✓	✓	
9	**33436**	3523.CE	✓		✓	✓			✓	✓	✓	
10	**19491**	3640.62	✓		✓	✓			✓	✓		

PEUGEOT 305 1977→ 09/82

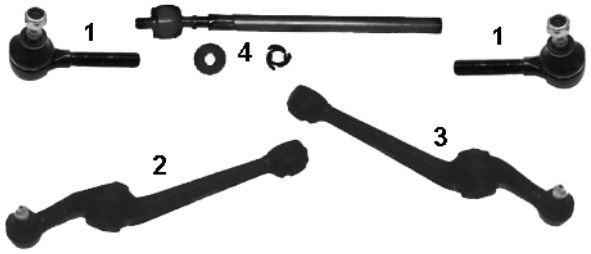

NR	MAPCO	REF									NEW	INFO
1	**19301**	3817.50	✓		✓	✓			✓	✓		M14 x 1,5 RHT
2	**19351**	3520.37	✓		✓				✓	✓		
3	**19352**	3521.26	✓			✓			✓	✓		
4	**19323**	3812.19	✓		✓	✓			✓	✓		M14x1,50RHT 262,0 mm

PEUGEOT 305 II 1.6-1.5

10/82→ 07/88

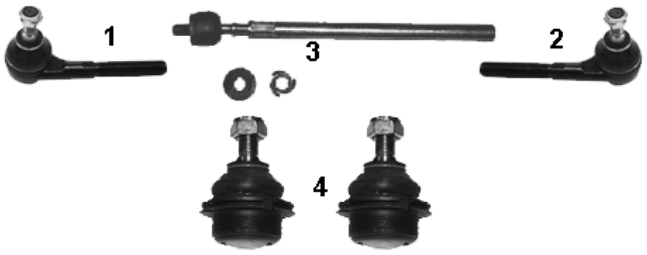

NR	MAPCO	REF								NEW	INFO
1	**19417**	3817.41	✓		✓				✓		M14 x 1,5 RHT
2	**19418**	3817.42	✓			✓			✓		M14 x 1,5 RHT
3	**19340**	3812.52			✓	✓			✓		258 mm
4	**19312**	3640.21	✓		✓	✓		✓	✓		

PEUGEOT 305 II 1.6-1.9

10/82→ 07/88

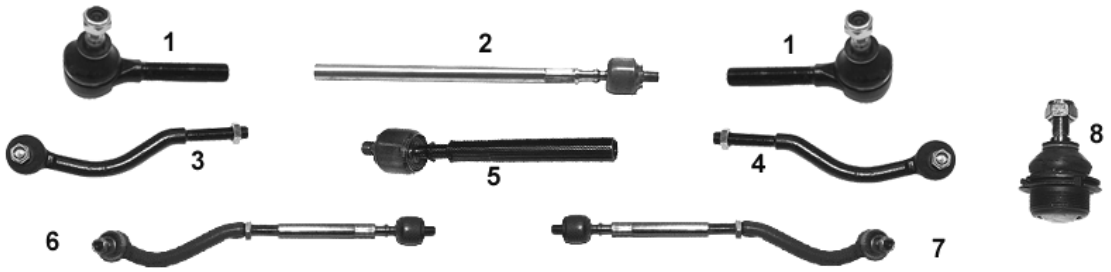

NR	MAPCO	REF								NEW	INFO
1	**19301**	3817.50	✓		✓	✓			✓		Chassis →9370001 M14 x 1,5 RHT
2	**19410**	3812.95	✓		✓	✓			✓		Chassis →9370001 M14x1,5 RHT 314 mm
3	**19315**	3817.26	✓		✓				✓		Chassis 9370002→
4	**19316**	3817.27	✓			✓			✓		Chassis 9370002→
5	**19324**	3812.98	✓		✓	✓			✓		Chassis 9370002→
6	**19325**	3812.72	✓		✓				✓		Chassis 9370002→
7	**19326**	3812.73	✓			✓			✓		Chassis 9370002→
8	**19312**	3640.21	✓		✓	✓			✓		

PEUGEOT 306 05/93→04/02

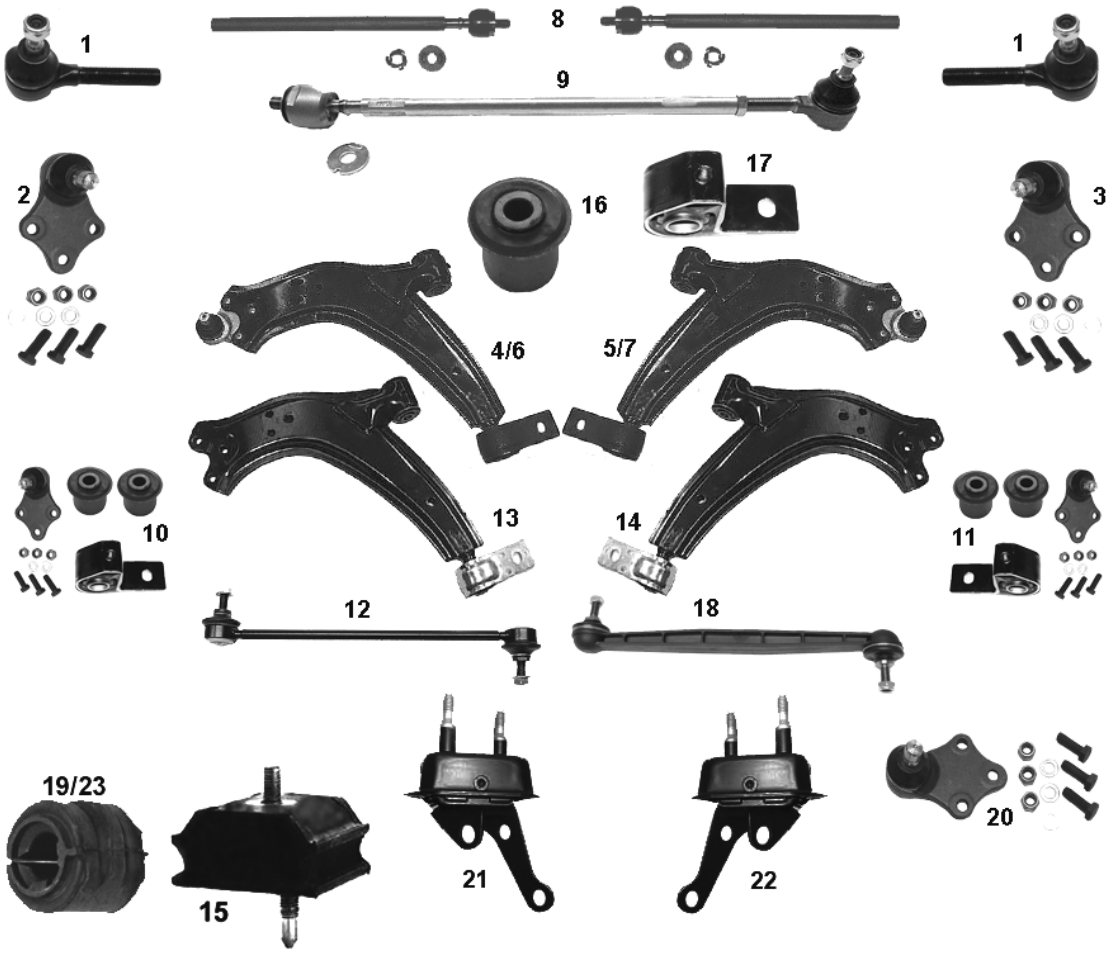

NR	MAPCO	REF								NEW	INFO
1	**19301**	3817.50	✓		✓	✓			✓	✓	
2	**19319**	3640.44	✓		✓	✓				✓	1993-1998
3	**19320**	3640.30	✓		✓	✓			✓		1993-1998
4	**19331**	3520.F1	✓		✓					✓	1993-1998
5	**19332**	3521.99	✓			✓				✓	1993-1998
6	**19333**	3520.84	✓		✓				✓		1993-1998
7	**19334**	3521.56	✓			✓			✓		1993-1998
8	**19336/1**	3812.92	✓		✓	✓			✓	✓	
9	**19336**		✓		✓	✓			✓	✓	**1+8**
10	**19219**		✓		✓	✓				✓	Kit 1993-1998
11	**19220**		✓		✓	✓			✓		Kit 1993-1998
12	**19337HPS**	5087.46	✓		✓	✓			✓	✓	**Stahl/steel**
13	**19331/1**	3520.H3	✓		✓				✓	✓	
14	**19332/1**	3521.E3	✓			✓			✓	✓	
15	**33321**	5131.71		✓	✓	✓			✓	✓	
16	**33416**		✓		✓	✓			✓	✓	
17	**33417**	3523.75	✓		✓	✓			✓	✓	
18	**19367**	5087.42	✓		✓	✓			✓	✓	**Kunststoff**
19	**33424**	5094.65	✓		✓	✓			✓	✓	**Ø 21,0 mm**
20	**19371**	3640.48	✓		✓	✓			✓	✓	1.9D, 2.0 HDI 08/99→ **Ø 18,0mm**
21	**33329**	5131.69		✓	✓				✓	✓	
22	**33330**	5131.70		✓		✓			✓	✓	
23	**33337**	5094.64	✓		✓	✓			✓	✓	**Ø 18,0mm**

PEUGEOT 306 Chassis → 7969 05/93 → 07/99







NR	MAPCO	REF								NEW	INFO
1	36406		✓		✓	✓			✓	✓	
2	36400		✓		✓	✓			✓	✓	
3	36401		✓		✓	✓			✓	✓	

PEUGEOT 307 08/00 →

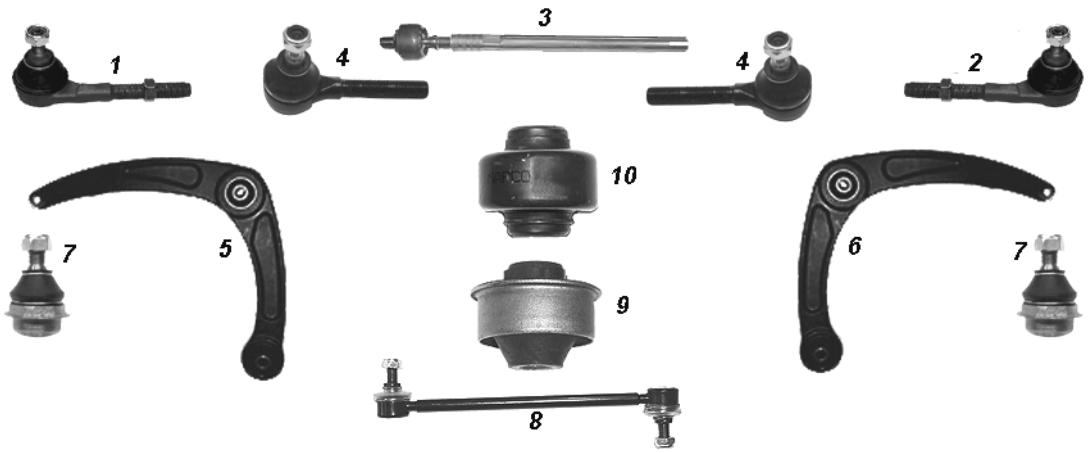

NR	MAPCO	REF								NEW	INFO
1	19417	3817.41	✓		✓					✓	Chassis →10310
2	19418	3817.42	✓			✓				✓	Chassis →10310
3	19379	3812.E0	✓		✓	✓			✓	✓	Chassis →10310
4	19301	3817.50	✓		✓	✓			✓	✓	Chassis 10311→
5	19383	3520.K8	✓		✓				✓	✓	18,0 mm
6	19384	3521.G8	✓			✓			✓	✓	18,0 mm
7	19372	3640.68	✓		✓	✓			✓	✓	
8	19375HPS	5087.50	✓		✓	✓			✓	✓	
9	33336	3523.92	✓		✓	✓			✓	✓	
10	33434	3523.91	✓		✓	✓			✓	✓	✓

PEUGEOT 3008 06/09 →



NR	MAPCO	REF								NEW	INFO
1	**49315**	3812.F2	✓		✓	✓			✓	✓	✓	257,0 mm
2	**49316**	3520.V2	✓		✓				✓	✓	✓	
3	**49317**	3521.R3	✓			✓			✓	✓	✓	
4	**33336**	3523.92	✓		✓	✓			✓	✓		
5	**33434**	3523.91	✓		✓	✓			✓	✓	✓	
6	**19372**	3640.68	✓		✓	✓			✓	✓		

PEUGEOT 308 09/07 →



NR	MAPCO	REF								NEW	INFO
1	**49315**	3812.F2	✓		✓	✓			✓	✓	✓	257,0 mm
2	**49316**	3520.V2	✓		✓				✓	✓	✓	
3	**49317**	3521.R3	✓			✓			✓	✓	✓	
4	**33336**	3523.92	✓		✓	✓			✓	✓		
5	**33434**	3523.91	✓		✓	✓			✓	✓	✓	
6	**19372**	3640.68	✓		✓	✓			✓	✓		

PEUGEOT 309 10/85 → 12/93


1


2


3

NR	MAPCO	REF								NEW	INFO
1	36306		✓		✓	✓			✓	✓	
2	36307		✓		✓	✓			✓	✓	
3	36300		✓		✓	✓			✓	✓	

PEUGEOT 309 I + II 10/85→12/93

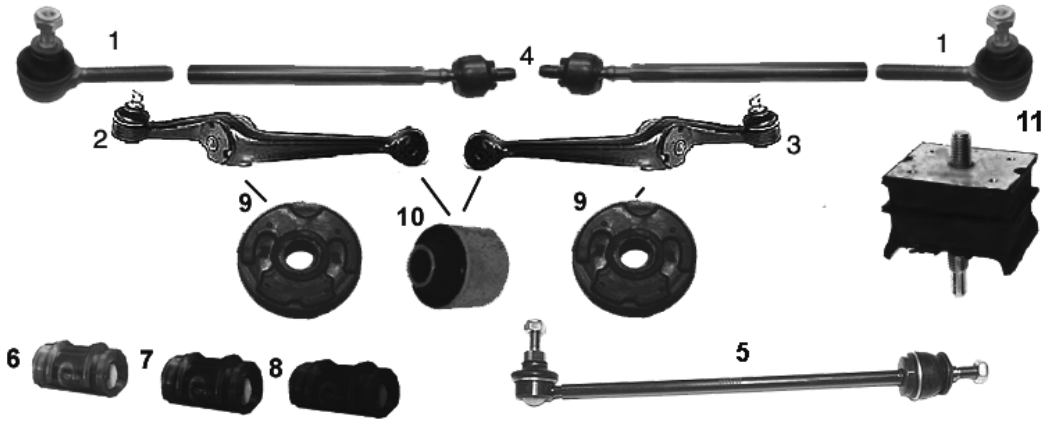

NR	MAPCO	REF								NEW	INFO
1	19301	3817.50	✓		✓	✓			✓	✓	M14x1,5RHT
2	19313	3520.57	✓		✓				✓	✓	STOP 1.9 GTI Chassis→2108017
2	19317	3520.60	✓		✓				✓	✓	STOP 1.9 GTI Chassis 2108018→
3	19314	3521.38	✓			✓			✓	✓	STOP 1.9 GTI Chassis →2108017
3	19318	3521.41	✓			✓			✓	✓	STOP 1.9 GTI Chassis 2108018→
4	19410	3812.95	✓		✓	✓			✓	✓	M14x1,5 RHT 314 mm
4a	19340/1	3812.97	✓		✓	✓			✓	✓	1+4
5	19339HPS	5087.32	✓		✓	✓			✓	✓	✓ Gti
6	33311	5094.36	✓		✓	✓			✓	✓	Ø20mm
7	33311/1	5094.37	✓		✓	✓			✓	✓	Ø22mm
8	33311/2	5094.40	✓		✓	✓			✓	✓	Ø23mm
9	33306	3523.35	✓		✓	✓			✓	✓	
10	33307	3523.20	✓		✓	✓			✓	✓	
11	33327	5151.10		✓	✓	✓	✓		✓	✓	

PEUGEOT 405 STOP 1.9, 2.0, Mi16, 4x4 — 01/87 → 10/96



NR	MAPCO	REF								NEW	INFO
1	36301		✓		✓	✓			✓	✓	
2	36302		✓		✓	✓			✓	✓	
3	36303		✓		✓	✓			✓	✓	

PEUGEOT 405 — 01/87→10/96

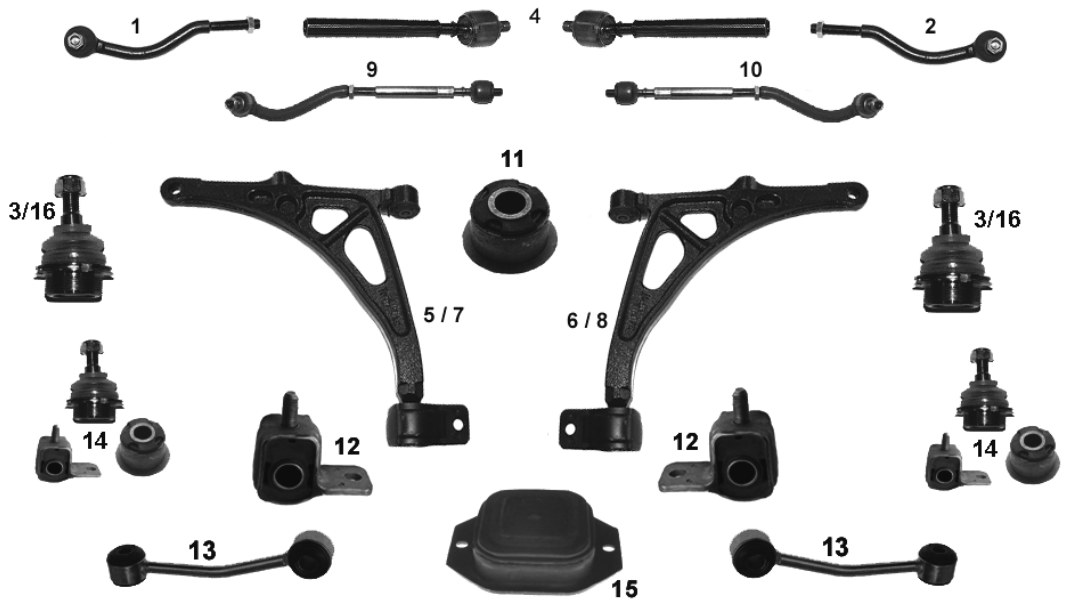

NR	MAPCO	REF								NEW	INFO
1	**19315**	3817.48	✓		✓				✓	✓	M14x1,5RHT
2	**19316**	3817.49	✓			✓			✓	✓	M14x1,5RHT
3	**19312**	3640.22	✓		✓				✓	✓	Chassis→ 71358279
4	**19324**	3812.98	✓		✓	✓			✓	✓	182,0mm
5	**19327**	3520.K5	✓		✓				✓	✓	Chassis→ 71358279
6	**19328**	3521.G5	✓			✓			✓	✓	Chassis→ 71358279
7	**19329**	3520.K4	✓		✓				✓	✓	Chassis 71358280→
8	**19330**	3521.G4	✓			✓			✓	✓	Chassis 71358280→
9	**19325**	3812.72	✓		✓				✓	✓	**1+4**
10	**19326**	3812.77	✓			✓			✓	✓	**2+4**
11	**33320**	3523.40	✓		✓	✓			✓	✓	
12	**33322**	3523.54	✓		✓	✓			✓	✓	
13	**19364**	5087.27	✓		✓	✓			✓	✓	
14	**19222**		✓		✓	✓			✓	✓	Kit
15	**33326**	5151.24		✓	✓	✓			✓	✓	STOP 4x4
16	**19425**	3640.34	✓		✓	✓			✓	✓	Chassis 71358280→

PEUGEOT 406 11/95 → 04/99





NR	MAPCO	REF			←	→	↑	↓			NEW	INFO
1	**36308**		✓		✓				✓	✓		✓ **1.8** 11/95→ 04/99
2	**36309**		✓			✓			✓	✓		STOP **1.8** 11/95→ 04/99

PEUGEOT 406 10/95→

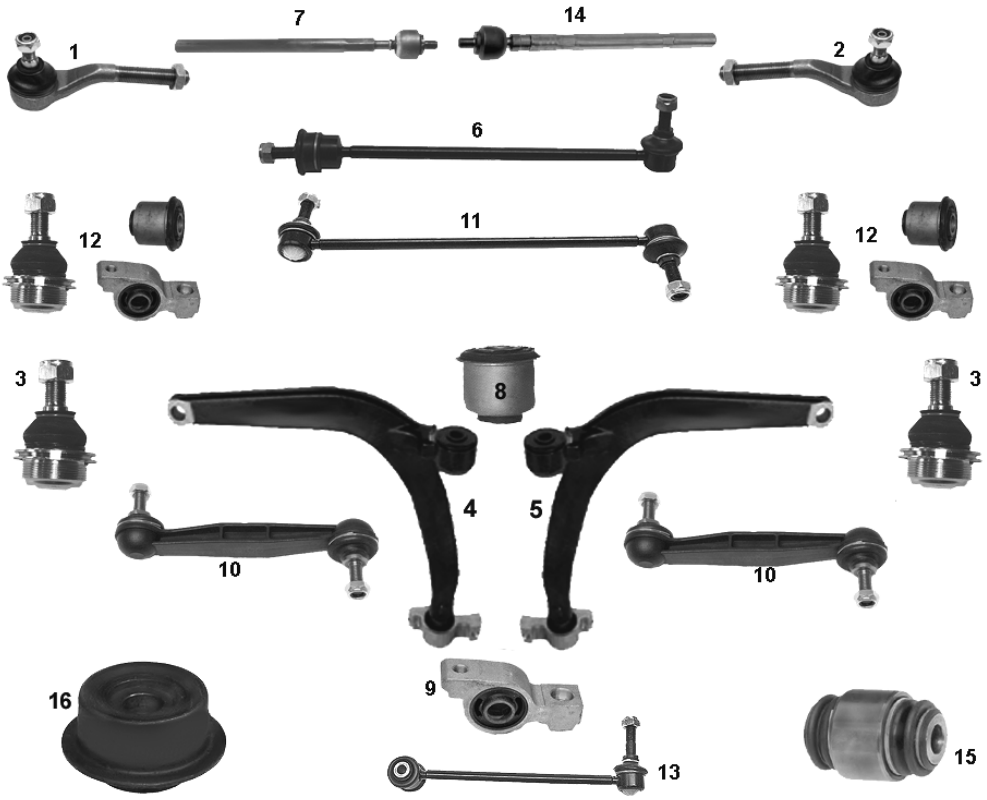

NR	MAPCO	REF			←	→	↑	↓			NEW	INFO
1	**19341**	3817.40	✓		✓				✓	✓		M16x1,5RHT
2	**19342**	3817.39	✓			✓			✓	✓		M16x1,5RHT
3	**19425**	3640.34	✓		✓	✓			✓	✓		
4	**19344**	3520.C0	✓		✓				✓	✓		
5	**19345**	3521.80	✓			✓			✓	✓		
6	**19338HPS**	5087.40	✓		✓	✓			✓	✓		Chassis → 7664
7	**19353**	3812.A9	✓		✓	✓			✓	✓		STOP 3.0 V6 Ø **22mm**
8	**33319**	3523.60	✓		✓	✓			✓	✓		
9	**33318**	3523.61		✓	✓	✓			✓	✓		
10	**19365**	5178.38		✓	✓	✓			✓	✓		
11	**19362HPS**	5087.48	✓		✓	✓			✓	✓		Chassis 7665→
12	**19225**		✓		✓	✓			✓	✓		Kit
13	**19368HPS**	5178.39		✓	✓	✓			✓	✓		
14	**19374**	3812.C4	✓		✓	✓			✓	✓		M16 x 1,5RHT Ø **20mm**
15	**33333**	3640.35		✓	✓	✓			✓	✓		Chassis → 7664
16	**33338**	5152.59		✓	✓	✓			✓	✓		

PEUGEOT 407 05/04 →

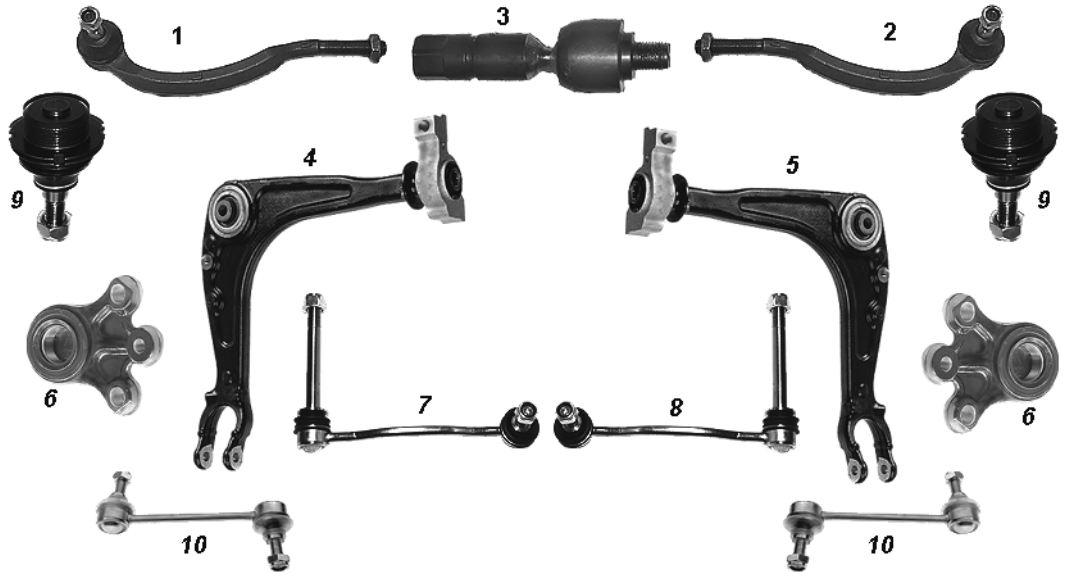

NR	MAPCO	REF								NEW	INFO
1	**19392**	3817.58	✓		✓				✓	✓		M14x1,5
2	**19393**	3817.57	✓			✓			✓	✓		M14x1,5
3	**19395**	3812.E3	✓		✓	✓			✓	✓		M14x1,5
4	**49320**	3520.N6	✓		✓			✓	✓	✓	✓	
5	**49321**	3521.J6	✓			✓		✓	✓	✓	✓	
6	**49309**	3640.72	✓		✓	✓		✓	✓	✓	✓	
7	**19396**	5087.52	✓		✓				✓	✓		
8	**19397**	5087.53	✓			✓			✓	✓		
9	**19394**	3640.57	✓		✓	✓	✓		✓	✓		
10	**49303**	5178.52		✓	✓	✓			✓	✓	✓	140,0 mm

PEUGEOT 5008 09/07 →



NR	MAPCO	REF								NEW	INFO
1	**49315**	3812.F2	✓		✓	✓			✓	✓	✓	
2	**19372**	3640 68	✓		✓	✓			✓	✓		
3	**33336**	3523.92	✓		✓	✓			✓	✓		
4	**33434**	3523.91	✓		✓	✓			✓	✓	✓	

PEUGEOT 504 - 505 - 604 1980→12/93



NR	MAPCO	REF			←	→	↑	↓			NEW	INFO
1	**19301**	3817.50	✓		✓	✓			✓	✓		M14x1,5RHT
2	**19355/1**	3812.25	✓		✓	✓			✓			M14x1,50RHT 262,0 mm
3	**19354/1**	3812.15	✓		✓	✓				✓		M14x1,50RHT 260,0 mm
4	**19354**	3817.15	✓		✓	✓				✓		
5	**19355**	3812.19	✓		✓	✓			✓			
6	**19307**	3640.25	✓		✓	✓		✓	✓	✓		
7	**33305**	3523.16	✓		✓	✓				✓		

PEUGEOT 605 (6B) 06/89→09/99

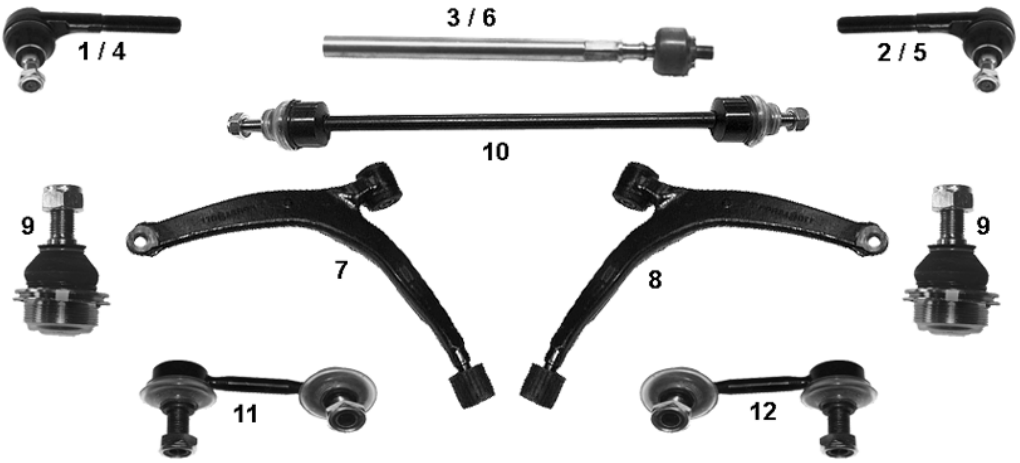

NR	MAPCO	REF			←	→	↑	↓			NEW	INFO
1	**19418**	3817.42	✓		✓				✓	✓		M14x1,5
2	**19417**	3817.41	✓			✓			✓	✓		M14x1,5
3	**19409**	3812.99	✓		✓	✓			✓	✓		→06/94 M14x1,5
4	**19382**	3817.43	✓		✓				✓			M16x1,5RHT
5	**19381**	3817.44	✓			✓			✓			M16x1,5RHT
6	**19353**	3812.A9	✓		✓	✓			✓			07/94→ M16x1,5
7	**19487**	3520.K6	✓		✓				✓	✓		
8	**19488**	3521.G6	✓			✓			✓	✓		
9	**19425**	3640.34	✓		✓	✓			✓	✓		
10	**19451HPS**	5087.41	✓		✓	✓			✓	✓		
11	**19370**	5178.30		✓	✓				✓	✓		
12	**19369HPS**	5178.31		✓		✓			✓	✓		

PEUGEOT 607 2.2 16V, 2.2HDI, 3.0 V6 24V

02/00→

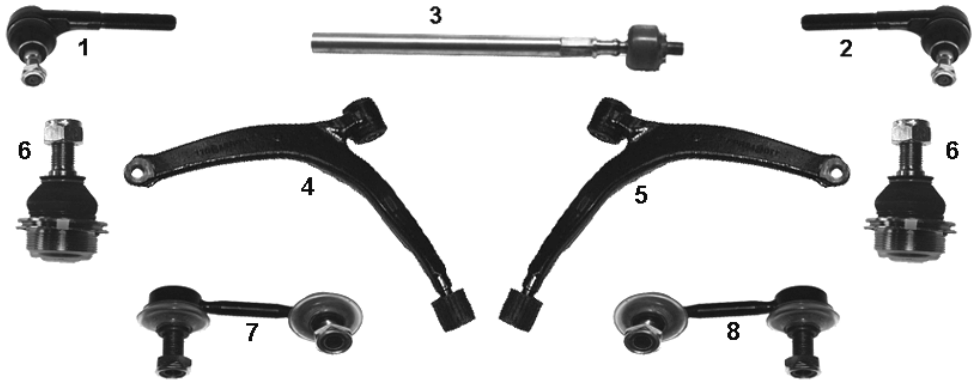

NR	MAPCO	REF								NEW	INFO
1	**19382**	3817.43	✓		✓				✓	✓		M16x 1,5RHT
2	**19381**	3817.44	✓			✓			✓	✓		M16x 1,5RHT
3	**19380**	3812.C7	✓		✓	✓			✓	✓		
4	**19487**	3520.K6	✓		✓				✓	✓		
5	**19488**	3521.G6	✓			✓			✓	✓		
6	**19425**	3640.34	✓		✓				✓	✓		
7	**19370**	5178.22		✓	✓				✓	✓		
8	**19369HPS**	5178.21		✓		✓			✓	✓		

PEUGEOT 806 2.0
PEUGEOT 806 D + TD

06/94→08/02



NR	MAPCO	REF								NEW	INFO
1	**19430**	4059.09	✓		✓	✓			✓	✓		M14x1,5RHT
2	**19431**	3520.C5	✓		✓				✓	✓		
3	**19432**	3521.C9	✓			✓			✓	✓		
4	**19023**	3812.A4	✓		✓				✓	✓		
5	**19363**	5087.35	✓		✓	✓			✓	✓		
6	**33017**	1312317080	✓		✓	✓			✓	✓		

PEUGEOT 807 06/02→

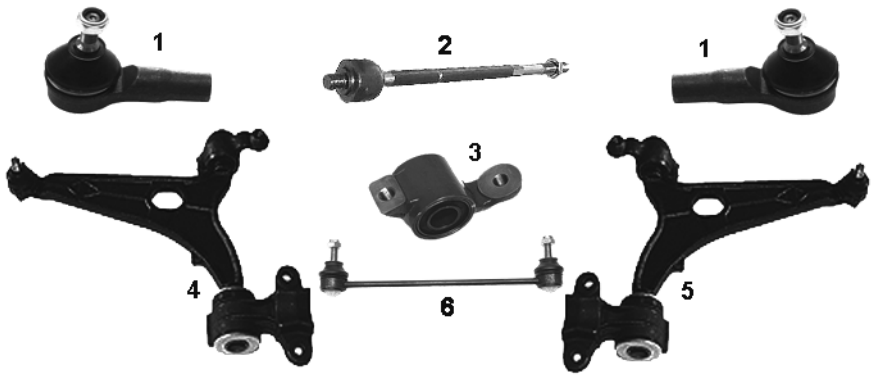

NR	MAPCO	REF								NEW	INFO
1	**19492**	4059.12	✓		✓	✓			✓	✓		M14x1,5
2	**19493**	3812.E2	✓		✓	✓			✓	✓	✓	M14x1,5
3	**33017**	1312317080	✓		✓	✓			✓	✓		
4	**49082**	3521.H0	✓		✓				✓	✓		
5	**49083**	3521.H1	✓			✓			✓	✓		
6	**19376HPS**	5087.51	✓		✓	✓			✓	✓		

PEUGEOT BIPPER 02/08→

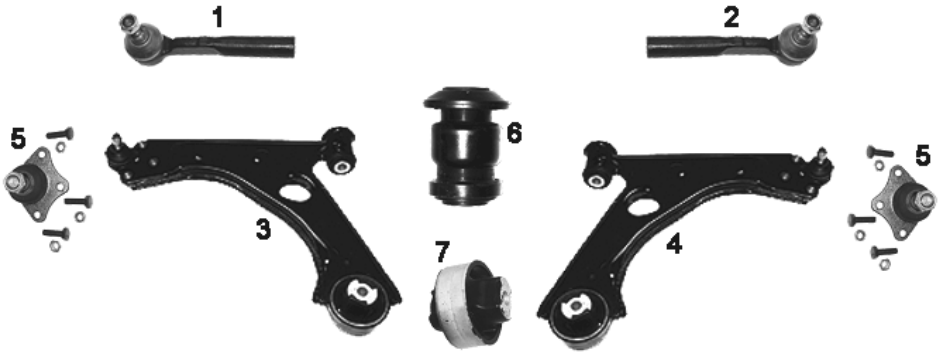

NR	MAPCO	REF								NEW	INFO
1	**59012**	3817.86	✓		✓				✓	✓	✓	
2	**59013**	3817.87	✓			✓			✓	✓	✓	
3	**19097**	3520.W3	✓		✓				✓	✓		
4	**19098**	3521.S6	✓			✓			✓	✓		
5	**49092**	3520.W3 part of	✓		✓	✓			✓	✓	✓	
6	**33044**		✓		✓	✓			✓	✓		
7	**33045**		✓		✓	✓			✓	✓		

PEUGEOT BOXER (230) 03/94→ 04/02

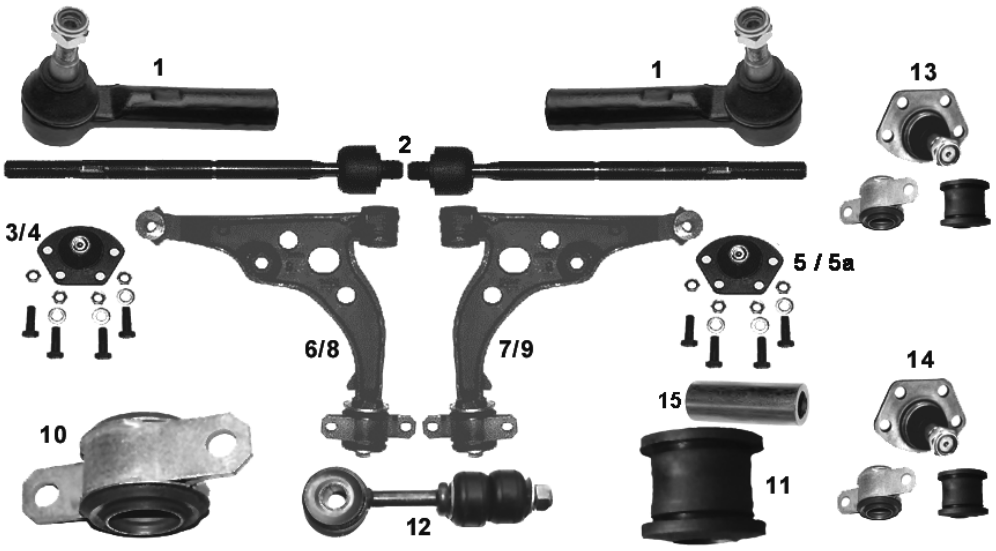

NR	MAPCO	REF									NEW	INFO
1	**19447**	4018A3	✓		✓	✓			✓	✓		M16x1,5RHT 120,0mm
2	**19448**	14716544080	✓		✓	✓			✓	✓		M16 x 1,5
3	**19449**	364032	✓		✓	✓			✓	✓		✓ (1.0t-1.4t) ø 17,0mm
4	**19450**	364033	✓		✓	✓			✓	✓		✓ (1.8t) ø 20,0mm
5	**19498**	364055	✓		✓	✓		✓	✓	✓	✓	✓ (1.0t-1.4t) ø 20,0mm 02/01→
5a	**19499**	364054	✓		✓	✓			✓	✓	✓	✓ (1.8t) ø 24,0mm 02/01→
6	**19461**	352095	✓		✓				✓	✓		✓ (1.0t-1.4t)
7	**19462**	352165	✓			✓			✓	✓		✓ (1.0t-1.4t)
8	**19463**	352096	✓		✓				✓	✓		✓ (1.8t)
9	**19464**	352166	✓			✓			✓	✓		✓ (1.8t)
10	**33001**	352394	✓		✓	✓			✓	✓		
11	**33006**	352393	✓		✓	✓			✓	✓		
15	**33006/1**	352505	✓		✓	✓			✓	✓		Hülse
12	**19366**	508737	✓		✓	✓			✓	✓		
13	**19251**		✓		✓	✓			✓	✓		Kit ✓ (1.0t-1.4t)
14	**19250**		✓		✓	✓			✓	✓		Kit ✓ (1.8t)

PEUGEOT BOXER (244) 04/02→

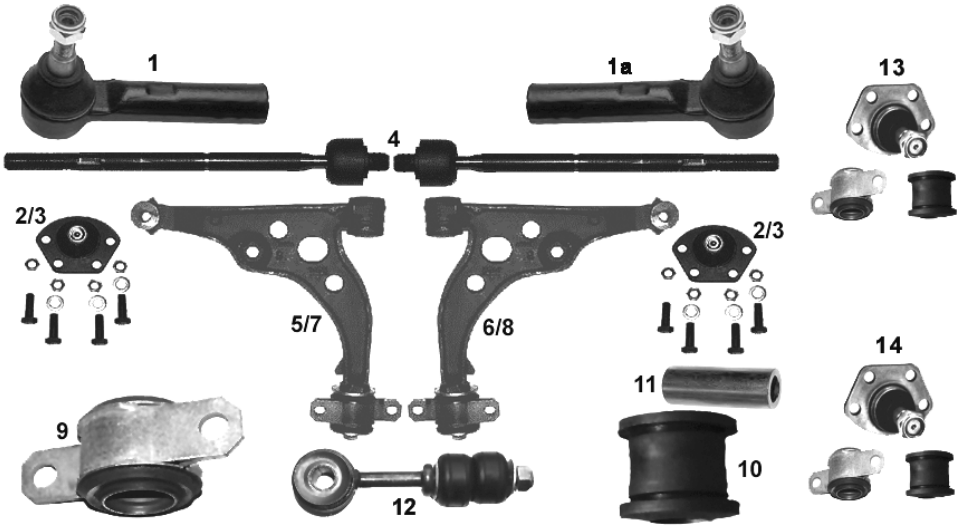

NR	MAPCO	REF			←	→	↑	↓			NEW	INFO
1	**19447**	4018.A3	✓		✓	✓			✓	✓		→12/02 M16x1,5RHT 120,0mm
1a	**19099**	4018.E0	✓		✓	✓			✓	✓	✓	12/02→ M16x1,5RHT
2	**19498**	3640.55	✓		✓	✓		✓	✓	✓	✓	✓ (1.0t-1.4t) ø 20,0mm
3	**19499**	3640.54	✓		✓	✓			✓	✓	✓	✓ (1.8t) ø 24,0mm
4	**19448**	4006.24	✓		✓	✓			✓			M16 x 1,5
5	**49084**	3520.N3	✓		✓				✓	✓		✓ (1.0t-1.4t)
6	**49085**	3521.J3	✓			✓			✓	✓		✓ (1.0t-1.4t)
7	**49086**	3520.L0	✓		✓				✓	✓		✓ (1.8t)
8	**49087**	3521.H3	✓			✓			✓	✓		✓ (1.8t)
9	**33001**	3523.94	✓		✓	✓			✓	✓		
10	**33006**	3523.93	✓		✓	✓			✓	✓		
11	**33006/1**	3525.05	✓		✓	✓			✓	✓		Hülse
12	**19366**	5087.37	✓		✓	✓			✓	✓		
13	**19251**		✓		✓	✓			✓	✓		Kit ✓ (1.0t-1.4t)
14	**19250**		✓		✓	✓			✓	✓		Kit ✓ (1.8t)

PEUGEOT BOXER 04/06→



NR	MAPCO	REF			←	→	↑	↓			NEW	INFO
1	**19496**	3817.69	✓		✓				✓	✓	✓	
2	**19497**	3817.70	✓			✓			✓	✓	✓	
3	**19494**	3520.S0	✓		✓				✓	✓	✓	✓ (1.0t-1.7t)
4	**19495**	3521.P1	✓			✓			✓	✓	✓	✓ (1.0t-1.7t)
5	**49099**	3640.67	✓		✓	✓			✓	✓	✓	ø 24mm

PEUGEOT EXPERT 02/96→



NR	MAPCO	REF									NEW	INFO
1	**19430**	4059.09	✓		✓	✓			✓	✓		M14x1,5RHT
2	**19431**	3520.C5	✓		✓				✓	✓		
3	**19432**	3521.85	✓			✓			✓	✓		
4	**19023**	3812.A4	✓		✓	✓			✓	✓		
5	**19363**	5087.35	✓		✓	✓			✓	✓		

PEUGEOT J 5 09/81→03/94



NR	MAPCO	REF									NEW	INFO
1	**19420**	3817.11	✓		✓	✓			✓	✓		M16x1,5RHT
2	**19405**	3812.27	✓		✓	✓				✓		M16x1,5RHT
3	**19421**	3640.18	✓		✓	✓			✓	✓		→ 09/85
4	**19422**	3640.26	✓		✓	✓			✓	✓		10/85→
5	**19441**	3520.76	✓		✓				✓	✓		✓ (1.0 - 1.4 t) 10/85→ 93
6	**19442**	3521.52	✓			✓			✓	✓		✓ (1.0 - 1.4 t) 10/85→ 93
7	**19468**	3520.77	✓		✓				✓	✓		✓ (1.8 t) 10/85→ 93
8	**19469**	3521.53	✓			✓			✓	✓		✓ (1.8 t) 10/85→ 93

PEUGEOT J 9

03/80→ 06/87

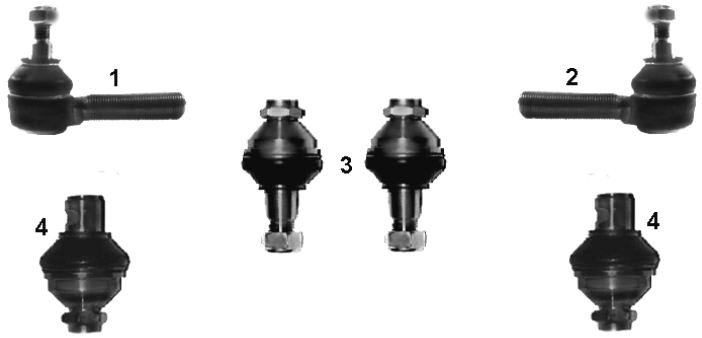

NR	MAPCO	REF			←	→	↑	↓			NEW	INFO
1	**19356**	3874.30	✓		✓				✓	✓		M20 x 1,5 LHT
2	**19357**	3874.31	✓			✓			✓	✓		M20 x 1,5 RHT
3	**19358**	3608.28	✓		✓	✓	✓		✓	✓		
4	**19359**	3622.15	✓		✓	✓		✓	✓	✓		

VERGLEICHSNUMMERN DIENEN NUR ZUR BESSEREN IDENTIFIKATION UND DÜRFEN NICHT AUF RECHNUNGEN ERSCHEINEN!
Reference numbers are used for better identification only!
Références d'origine pour meilleure identification seulement!

PEUGEOT PARTNER 1996→

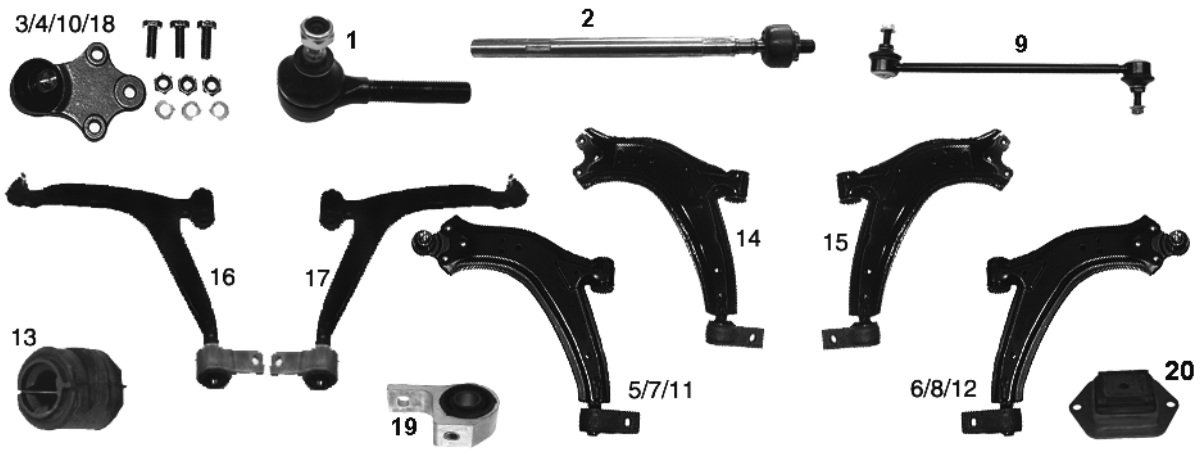

NR	MAPCO	REF								NEW	INFO
1	**19301**	3817.50	✓		✓	✓			✓	✓		M14x1,5RHT
2	**19411**	3812.C0	✓		✓	✓			✓	✓		
3	**19426**	3640.39	✓		✓	✓				✓		
4	**19427**	3640.38	✓		✓	✓			✓			Chassis→ O 7972, →1999, 16mm
5	**19437**	3520.F6	✓		✓					✓		Chassis→ O 7972, →1999, 16mm
6	**19438**	3521.A6	✓			✓				✓		Chassis→ O 7972, →1999, 16mm
7	**19439**	3520.A2	✓		✓				✓			Chassis→ O 7972, →1999, 16mm
8	**19440**	3521.A7	✓			✓			✓			Chassis→ O 7972, →1999, 16mm
9	**19337HPS**	5087.39	✓		✓	✓			✓	✓		
10	**19473**	3640.51	✓		✓	✓			✓			Chassis O 7973 → , 1999→,18 mm
11	**19474**	3520.H5	✓		✓				✓	✓		Chassis O 7973 → , 1999→,18 mm
12	**19475**	3521.E5	✓			✓			✓	✓		Chassis O 7973 → , 1999→,18 mm
13	**33424**	509465	✓		✓	✓			✓	✓		Ø 21 mm
14	**19331/1**	3521.87	✓		✓	✓			✓	✓		
15	**19332/1**	3521.90	✓		✓	✓			✓	✓		
16	**19485**	3520.J3	✓		✓				✓			✓ 2.0 HDI 02/00→
17	**19486**	3521.F3	✓			✓			✓			✓ 2.0 HDI 02/00→
18	**19389**	3640.50	✓		✓	✓				✓		Chassis O 7973→,18 mm
19	**33431**	3523.83	✓		✓	✓			✓			✓ 2.0 HDI 02/00→
20	**33433**	5152.62		✓	✓	✓			✓	✓	✓	

PEUGEOT PARTNER 04/08 →



NR	MAPCO	REF										INFO
1	**49401**	3812.F4	✓		✓	✓			✓	✓	✓	
2	**19372**	3640.68	✓		✓	✓			✓	✓		
3	**19383**	3520.K8	✓		✓				✓	✓		18,0 mm
4	**19384**	3521.G8	✓			✓			✓	✓		18,0 mm
5	**33336**	3523.92	✓		✓	✓			✓	✓		
6	**33434**	3523.91	✓		✓	✓			✓	✓	✓	

PORSCHE

PORSCHE 911 Cabriolet (996) 09/97→ 08/05



NR	MAPCO	REF										INFO
1	**52780**	99634105306	✓	✓	✓	✓		✓	✓	✓	✓	

PORSCHE 911 (996) 09/97→ 08/05



NR	MAPCO	REF										INFO
1	**52780**	99634105306	✓	✓	✓	✓		✓	✓	✓	✓	

PORSCHE 911 Targa (996) 12/01→ 08/05



NR	MAPCO	REF										INFO
1	**52780**	99634105306	✓	✓	✓	✓		✓	✓	✓	✓	

PORSCHE BOXSTER (986) 09/06→



NR	MAPCO	REF									NEW	INFO
1	**52780**	99634105306	✓	✓	✓	✓		✓	✓	✓	✓	

PORSCHE CAYENNE (955) 09/02→

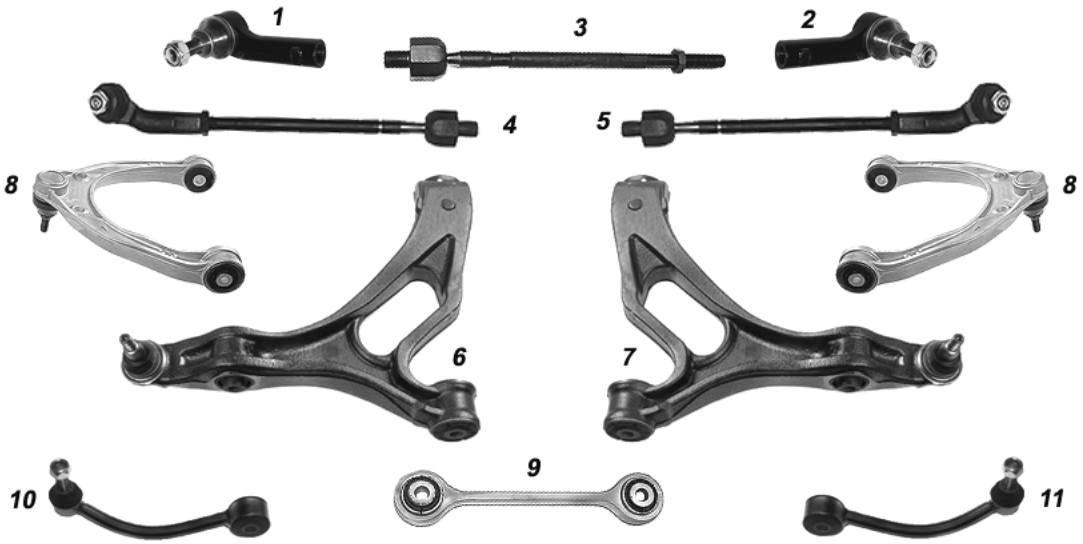

NR	MAPCO	REF									NEW	INFO
1	**51742**	95534713122	✓		✓				✓	✓	✓	M16X1,5
2	**51743**	95534713222	✓			✓			✓	✓	✓	M16X1,5
3	**51744**	95534703121	✓		✓	✓			✓	✓	✓	M16X1,5
4	**51745**	95534703120	✓		✓				✓	✓	✓	1+3
5	**51746**	95534703221	✓			✓			✓	✓	✓	2+3
6	**52714**	7L8407151E	✓		✓			✓	✓	✓	✓	
7	**52715**	7L8407152D	✓			✓		✓	✓	✓	✓	
8	**52716**	95534102701	✓		✓	✓	✓		✓	✓	✓	
9	**51824**	95534306900	✓		✓	✓			✓	✓		197,0 mm
10	**51733**	95533306921		✓	✓				✓	✓	✓	
11	**51734**	95533307021		✓		✓			✓	✓	✓	

PROTON

PROTON PERSONA 300 03/96 →

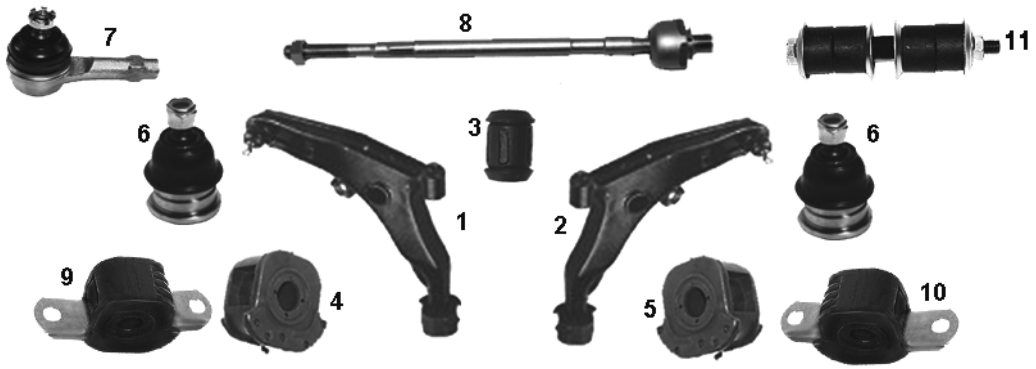

NR	MAPCO	REF			←	→	↑	↓			NEW	INFO
1	**49540**	MB 912077	✓		✓				✓	✓		
2	**49541**	MB 912078	✓			✓			✓	✓		
3	**33552**	MR 130982	✓		✓	✓			✓	✓		
4	**33551**	MB 808909	✓		✓				✓	✓		
5	**33550**	MB 808910	✓			✓			✓	✓		
6	**49578**	MB 241833	✓		✓	✓			✓	✓		
7	**19547**	MB 598023	✓		✓	✓			✓	✓		M12 x1,25 RHT
8	**59206**	PW 530031	✓		✓	✓			✓	✓		327,5mm
9	**33551/1**	MB 808909	✓		✓				✓	✓		
10	**33550/1**	MB 808910	✓			✓			✓	✓		
11	**51598**	MB 241974	✓		✓	✓			✓	✓	✓	

PROTON PERSONA 400 01/94 →

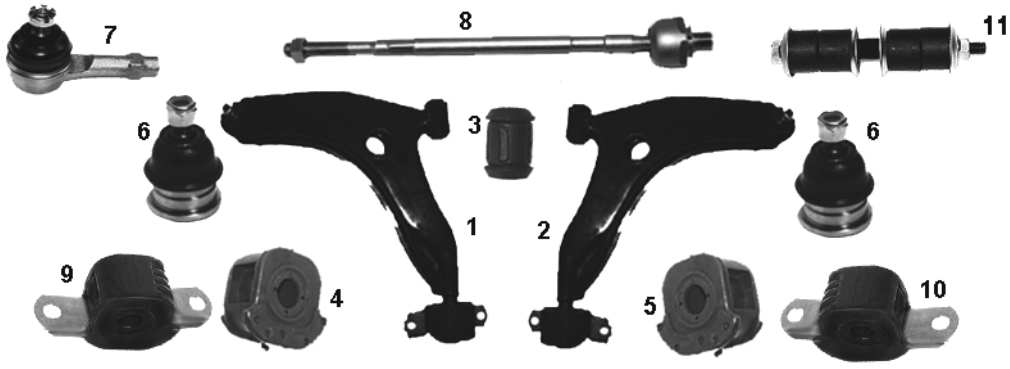

NR	MAPCO	REF			←	→	↑	↓			NEW	INFO
1	**49544**	MR 179479	✓		✓				✓	✓		
2	**49545**	MR 179480	✓			✓			✓	✓		
3	**33552**	MR 130982	✓		✓	✓			✓	✓		
4	**33551**	MB 808909	✓		✓				✓	✓		
5	**33550**	MB 808910	✓			✓			✓	✓		
6	**49578**	MB 241833	✓		✓	✓			✓	✓		
7	**19540**	MB 912076	✓		✓	✓			✓	✓		M12 x1,25 RHT
8	**59206**	PW 530031	✓		✓	✓			✓	✓		327,5mm
9	**33551/1**	MB 808909	✓		✓				✓	✓		
10	**33550/1**	MB 808910	✓			✓			✓	✓		
11	**51598**	MB 241974	✓		✓	✓			✓	✓	✓	

VERGLEICHSNUMMERN DIENEN NUR ZUR BESSEREN IDENTIFIKATION
UND DÜRFEN NICHT AUF RECHNUNGEN ERSCHEINEN!!!
Reference numbers are used for better identification only!
Références d´origine pour meilleure identification seulement !

RENAULT

RENAULT CLIO I 05/90→ 07/94

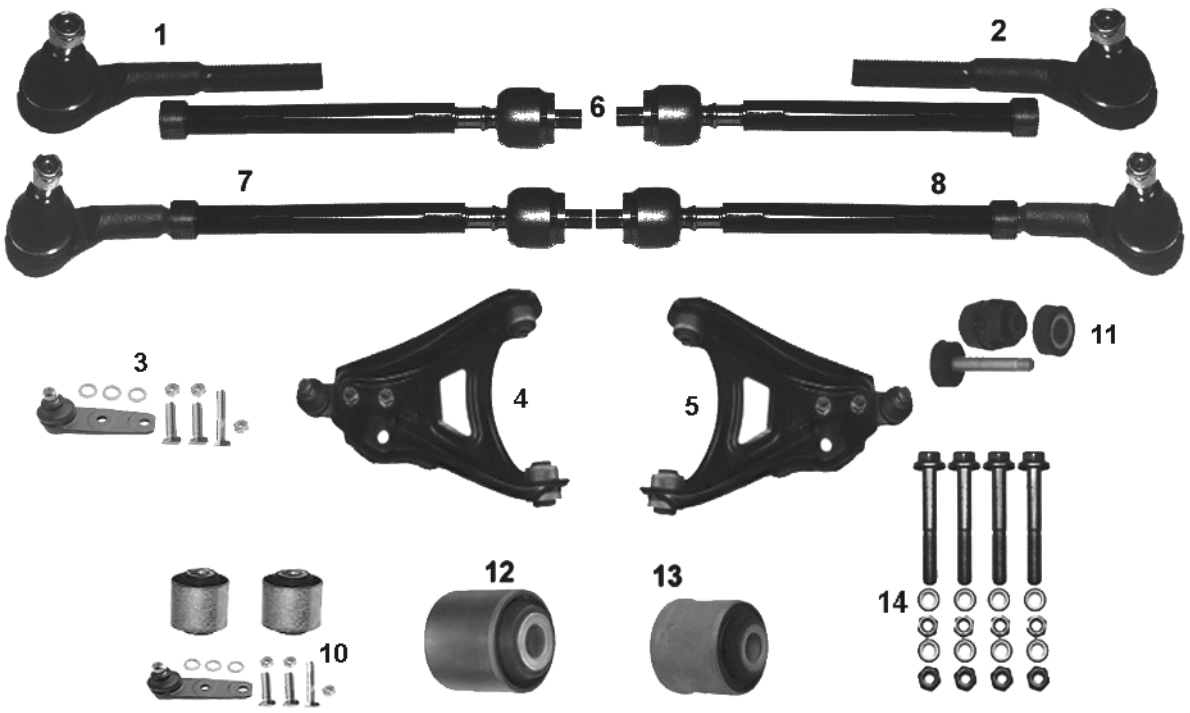

NR	MAPCO	REF								NEW	INFO
1	**19133**	7701467273	✓		✓				✓	✓		M14x1,5RHT
2	**19134**	7701467274	✓			✓			✓	✓		M14x1,5RHT
3	**19109**	7701468883	✓		✓	✓			✓	✓		
4	**19137**	7700794386	✓		✓				✓	✓		STOP 16V
5	**19138**	7700794387	✓			✓			✓	✓		STOP 16V
6	**19152**	7700658272	✓		✓	✓			✓	✓		
7	**19153**	7701467271	✓		✓				✓	✓		**1+6**
8	**19154**	7701467272	✓			✓			✓	✓		**2+6**
9	**19155**	7701466158	✓		✓	✓			✓	✓		**7+8**
10	**19209**		✓		✓	✓			✓	✓		Kit
11	**33164**	7700799404	✓		✓	✓			✓	✓		
12	**33129**	7700799065	✓		✓	✓			✓	✓		
13	**33130**	7700799064	✓		✓	✓			✓	✓		
14	**95137**		✓		✓	✓			✓	✓		MS

RENAULT CLIO I

08/94→ 09/98

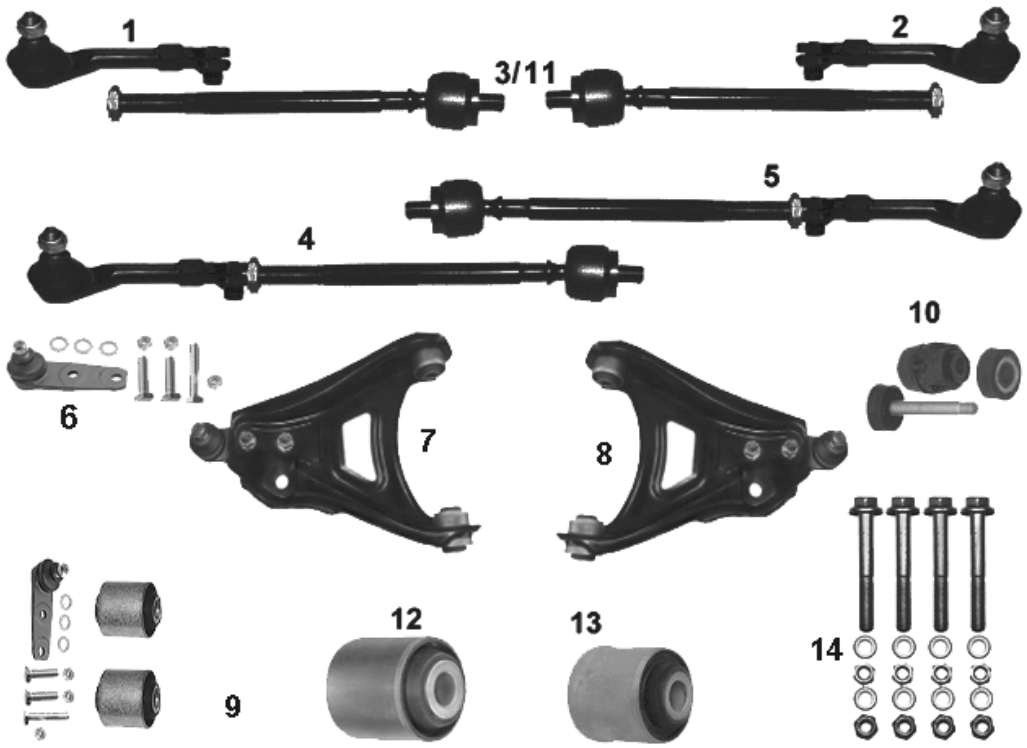

NR	MAPCO	REF								NEW	INFO
1	**49100**	6000022720	✓		✓				✓	✓		M14 x 1,5 RHT
2	**49101**	6000022721	✓			✓			✓	✓		M14 x 1,5 RHT
3	**19174**	7701469777	✓		✓	✓				✓		**265,0 mm**
4	**19175**	7701467539	✓		✓				✓	✓		**1+3**
5	**19176**	7701467540	✓			✓			✓	✓		**2+3**
6	**19109**	7701468883	✓		✓	✓			✓	✓		
7	**19137**	7700794386	✓		✓				✓	✓		
8	**19138**	7700794387	✓			✓			✓	✓		
9	**19209**		✓		✓	✓			✓	✓		Kit
10	**33164**	7700799404	✓		✓	✓			✓	✓		
11	**49102**	7701469778	✓		✓	✓			✓			**230,0mm**
12	**33129**	7700799065	✓		✓	✓			✓	✓		
13	**33130**	7700799064	✓		✓	✓			✓	✓		
14	**95137**		✓		✓	✓			✓	✓		**MS**

RENAULT CLIO I STOP 16S, RTi, RSi, S, Williams 06/90→ 01/98







NR	MAPCO	REF								NEW	INFO
1	36123		✓		✓				✓	✓	
2	36132		✓			✓			✓	✓	
3	36133		✓		✓	✓			✓	✓	

RENAULT CLIO II 09/98→

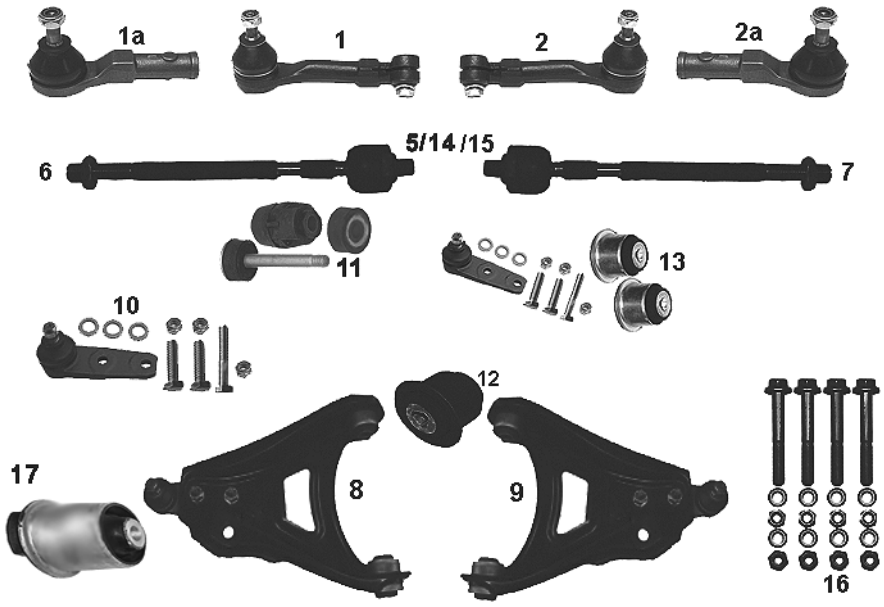

NR	MAPCO	REF								NEW	INFO
1	19189	7701471145	✓		✓				✓	✓	→ 11/99 M14 x 1,5 RHT
1a	49135	7701474492	✓		✓				✓	✓	12/99→ 12,20mm M14x1,5RHT
2	19190	7701471146	✓			✓			✓	✓	→ 11/99 M14 x 1,5 RHT
2a	49136	7701474493	✓			✓			✓	✓	12/99→ 12,20mm M14x1,5RHT
5	19193	7701471125	✓		✓	✓				✓	(**SMI**) → 11/99 **240mm**
6	19194	7701471143	✓		✓	✓			✓		**258mm** (**TRW**) →12/99
7	19195	7701472113	✓		✓	✓				✓	**258mm** (**TRW**) 01/00 →
8	19196	7700425227	✓		✓				✓	✓	04/99→
9	19197	7700425228	✓			✓			✓	✓	04/99→
10	19109	7701468883	✓		✓	✓			✓	✓	
11	33164	7700799404	✓		✓	✓			✓	✓	
12	33165	7700419249	✓		✓	✓			✓	✓	
13	19208		✓		✓	✓			✓	✓	Kit
14	49117/1	7701472120	✓		✓	✓				✓	Außen M12x1,5 (**SMI**) 12/99→ **300mm**
15	51117/1	7701472734	✓		✓	✓			✓	✓	Außen M14x1,5 (**TRW**) 01/00→ **296mm**
16	95137		✓		✓	✓			✓	✓	MS
17	33128	7700429441		✓	✓	✓			✓	✓	✓

RENAULT CLIO III 05/05→

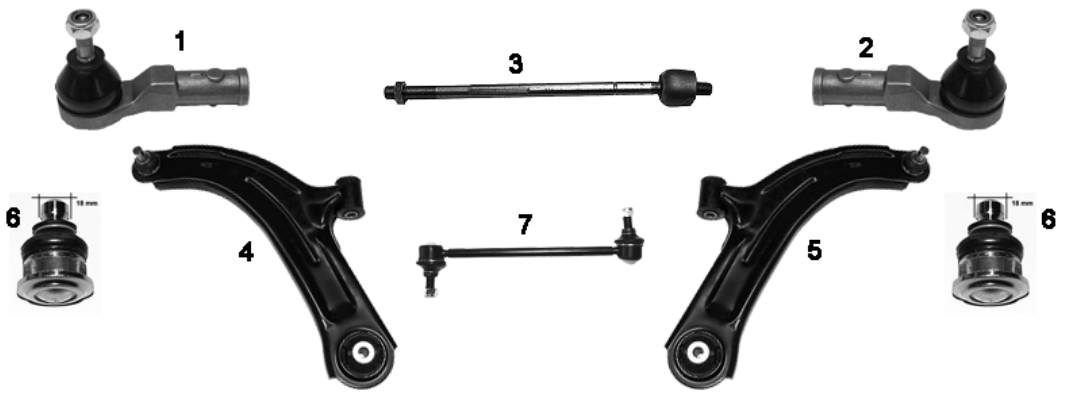

NR	MAPCO	REF			←	→	↑	↓			NEW	INFO
1	**49135**	7701474492	✓		✓				✓	✓		12,20mm M14x1,5RHT
2	**49136**	7701474493	✓			✓			✓	✓		12,20mm M14x1,5RHT
3	**49159**	7701475841	✓		✓	✓			✓	✓	✓	**310,0mm**
4	**49152**	8200346941	✓		✓			✓	✓	✓		
5	**49153**	8200346942	✓			✓		✓	✓	✓		
6	**49151**	8200298455 part of	✓		✓	✓			✓	✓		ø = 18mm
7	**19120HPS**	8200127308	✓		✓	✓			✓	✓		M10x1,25 248,0mm

RENAULT CLIO Grandtour (KR0/1_) 02/08→

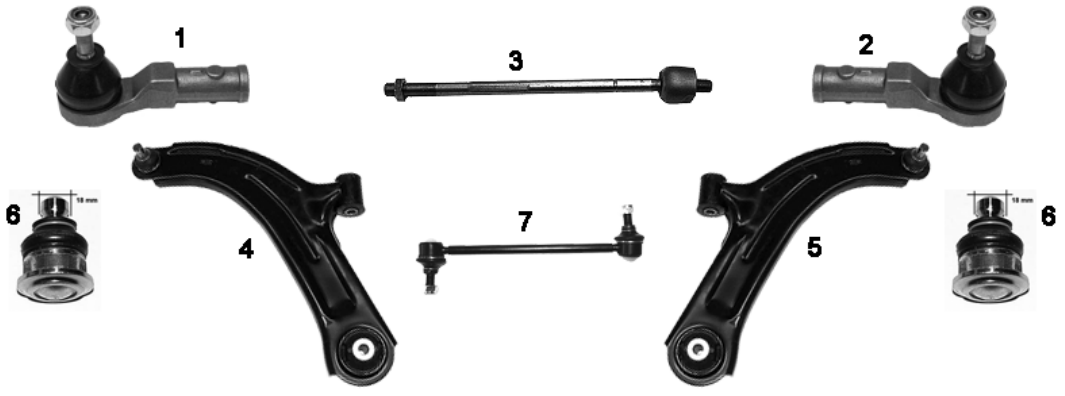

NR	MAPCO	REF			←	→	↑	↓			NEW	INFO
1	**49135**	7701474492	✓		✓				✓	✓		12,20mm M14x1,5RHT
2	**49136**	7701474493	✓			✓			✓	✓		12,20mm M14x1,5RHT
3	**49159**	7701475841	✓		✓	✓			✓	✓	✓	**310,0mm**
4	**49152**	8200346941	✓		✓			✓	✓	✓		
5	**49153**	8200346942	✓			✓		✓	✓	✓		
6	**49151**	8200298455 part of	✓		✓	✓			✓	✓		ø = 18mm
7	**19120HPS**	8200127308	✓		✓	✓			✓	✓		M10x1,25 248,0mm

RENAULT ESPACE I (J11) 07/84→12/92

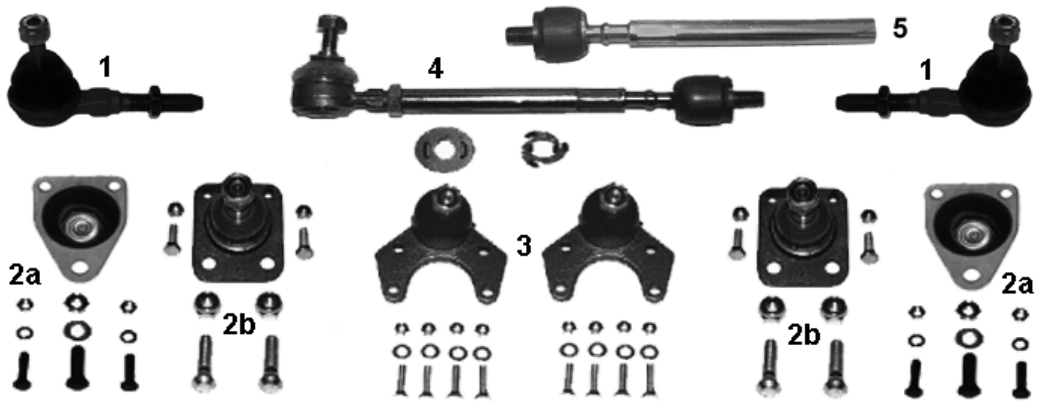

NR	MAPCO	REF								NEW	INFO
1	**19108**	7701464151	✓		✓	✓			✓	✓		M14 x 1,5 RHT
2a	**19116**	7701461332	✓		✓	✓	✓		✓	✓		→ 12/87
2b	**19127**	7701463229	✓		✓	✓	✓		✓	✓		01/88→
3	**19115**	7701461331	✓		✓	✓		✓	✓	✓		→ 12/87
3	**19128**	7701465689	✓		✓	✓		✓	✓	✓		01/88→
4	**19107**	7701463025	✓		✓	✓			✓	✓		**1 + 5**
5	**19107/1**	7701463025	✓		✓	✓			✓	✓		**220 mm**

RENAULT ESPACE II (J/S63) 01/91→12/96

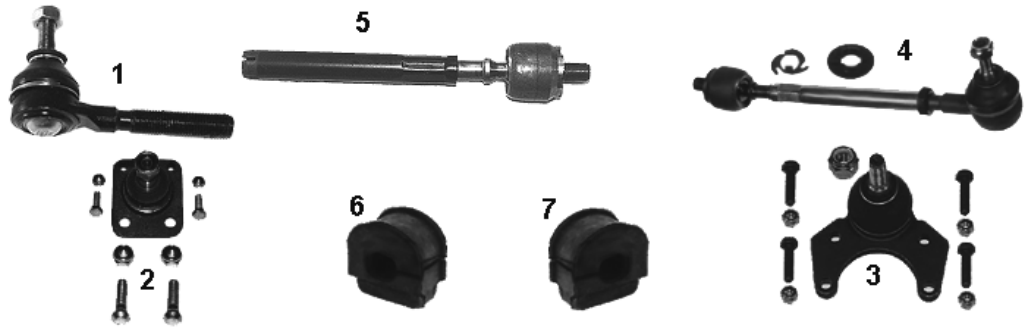

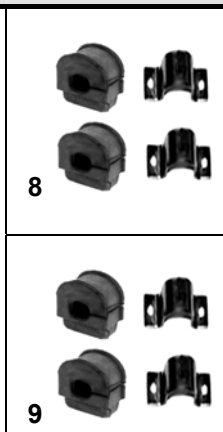

NR	MAPCO	REF								NEW	INFO
1	**19108**	7701464151	✓		✓	✓			✓	✓		M14 x 1,5 RHT
2	**19127**	7701463229	✓		✓	✓	✓		✓	✓		01/91→ 10/96
3	**19128**	7701465689	✓		✓	✓		✓	✓	✓		
4	**19126**	7701646313	✓		✓	✓			✓	✓		**1 + 5**
5	**19198**	7701469229	✓		✓	✓			✓	✓		**190,0 mm**
6	**33168**	7700797821	✓		✓	✓			✓	✓		✓ 2.0,2.2,2.1TD
7	**33169**	6025105409	✓		✓	✓			✓	✓		✓ 2.0,2.2,2.1TD
8	**36134**		✓		✓	✓			✓	✓		
9	**36135**		✓		✓	✓			✓	✓		

RENAULT ESPACE III (JE) 11/96→10/02



NR	MAPCO	REF								NEW	INFO
1	**49112**	6025370229	✓		✓				✓	✓		M14 x 1,5 RHT
2	**49113**	6025370230	✓			✓			✓	✓		M14 x 1,5 RHT
3	**49115/1**		✓		✓	✓			✓	✓		M14 x 1,5 RHT **255,0 mm**
4	**49114**	6025370493	✓		✓				✓	✓		
5	**49115**	6025370494	✓			✓			✓	✓		
6	**49116**	6025308155	✓		✓	✓		✓	✓	✓		
7	**19164HPS**	7700805494	✓		✓	✓			✓	✓		

RENAULT ESPACE IV (JK0_) 11/02→

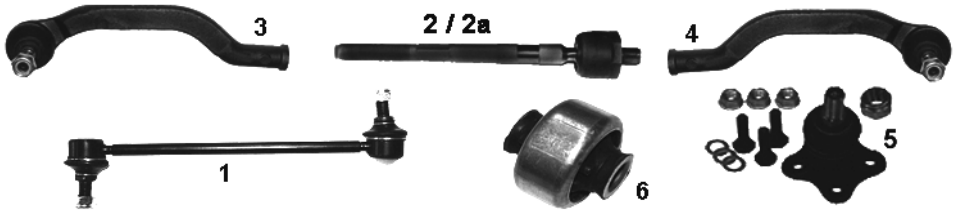

NR	MAPCO	REF								NEW	INFO
1	**49118HPS**	8200002870	✓		✓	✓			✓	✓		✓ **1.9dCi**
2	**49145**	7701472766	✓		✓	✓			✓	✓		M14x1,5 **216,0 mm**
2a	**49155**	7701473333	✓		✓	✓			✓	✓		M14x1,5 **280,0 mm**
3	**49143**	7701049282	✓		✓				✓	✓		
4	**49144**	7701049283	✓			✓			✓	✓		
5	**49140**	7701476576	✓		✓	✓		✓	✓	✓		
6	**33122**	8200002869	✓		✓	✓			✓	✓	✓	

RENAULT EXPRESS - RAPID 03/86→08/98

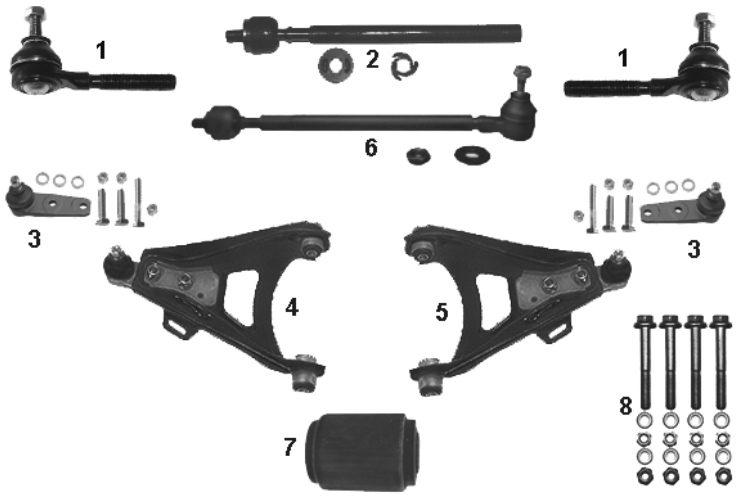

NR	MAPCO	REF									NEW	INFO
1	**19108**	7701461141	✓		✓	✓			✓	✓		M14 x 1,5 RHT
2	**19166/1**	7701463346	✓		✓	✓			✓	✓		274,0 mm
3	**19109**	7701468883	✓		✓	✓			✓	✓		
4	**19162**	7700783455	✓		✓				✓	✓		
5	**19163**	7700783456	✓			✓			✓	✓		
6	**49107**		✓		✓	✓			✓	✓		**1 + 2**
7	**33100**	7704000681	✓		✓	✓			✓	✓		
8	**95137**		✓		✓	✓			✓	✓		MS

RENAULT KANGOO (KC0/1_), (FC0/1_) 03/98→

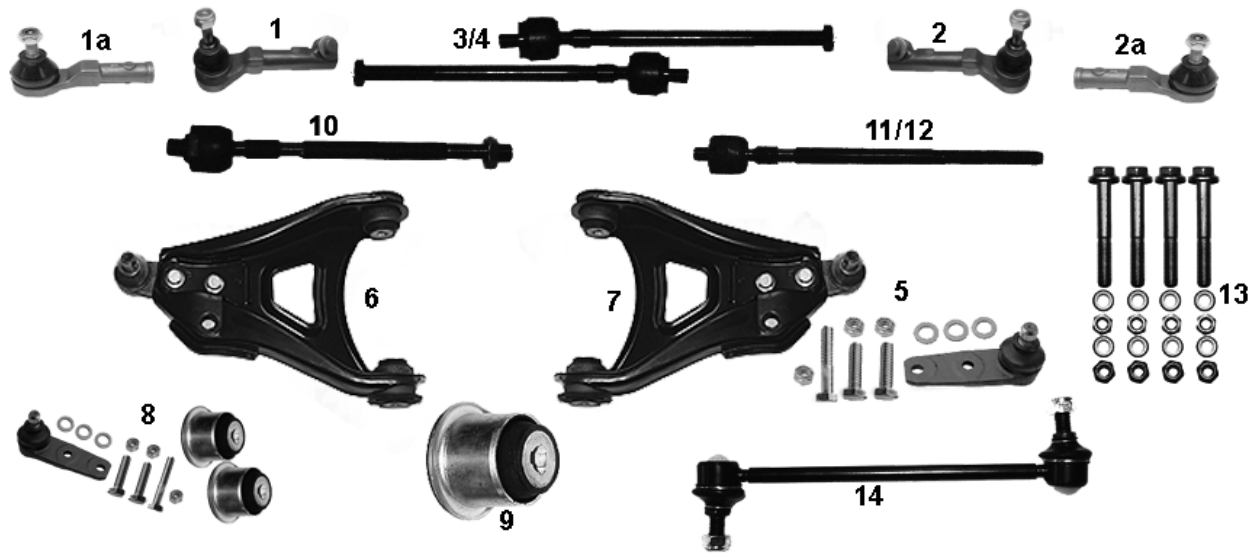

NR	MAPCO	REF			←	→	↑	↓			NEW	INFO
1	**19180**	7701470765	✓		✓				✓	✓		→02/99 M14x1,5RHT
1a	**49135**	7701474492	✓		✓				✓	✓		03/99→ 12,20mm M14x1,5RHT
2	**19181**	7701470766	✓			✓			✓	✓		→02/99 M14x1,5RHT
2a	**49136**	7701474493	✓			✓			✓	✓		03/99→ 12,20mm M14x1,5RHT
3	**19182**	7701470763	✓		✓	✓				✓		→02/99 **264mm**
4	**19183**	7701470764	✓		✓	✓			✓			→02/99 **268mm**
5	**19109**	7701468883	✓		✓	✓			✓	✓		
6	**19196**	7700425227	✓		✓				✓	✓		STOP **4x4**
7	**19197**	7700425228	✓			✓			✓	✓		STOP **4x4**
8	**19208**		✓		✓	✓			✓	✓		Kit
9	**33165**	7700419249	✓		✓	✓			✓	✓		
10	**19195**	7701472113	✓		✓	✓				✓		2000→ **258mm**
11	**49117/1**	7701472120	✓		✓	✓			✓	✓		Außen M12x1,5(**SMI**) 03/99→ **300mm**
12	**51117/1**	7701472734	✓		✓	✓			✓			Außen M14x1,5(**TRW**) 03/99→ **296mm**
13	**95137**		✓		✓	✓			✓	✓		MS
14	**49146HPS**	7700437136	✓		✓	✓			✓	✓	✓	✓ **4x4** **258mm**

RENAULT KANGOO / KANGOO EXPRESS 02/08→



NR	MAPCO	REF								NEW	INFO
1	49157	7701478407	✓		✓				✓	✓	✓	
2	49158	7701478408	✓			✓			✓	✓	✓	
3	49161	7701478406	✓		✓	✓			✓	✓	✓	M14x1,5 210,0mm
4	49162	8200586561 part of	✓		✓				✓	✓	✓	Ø = 20,0 mm
5	49163	8200586567 part of	✓			✓			✓	✓	✓	Ø = 20,0 mm
6	33119	8200041166	✓		✓	✓			✓	✓	✓	
7	33120	8200242025	✓		✓	✓			✓	✓	✓	
8	49124HPS	8200166159	✓		✓	✓			✓	✓		285,0 mm

RENAULT KANGOO BE BOP 02/09→



NR	MAPCO	REF								NEW	INFO
1	49157	7701478407	✓		✓				✓	✓	✓	
2	49158	7701478408	✓			✓			✓	✓	✓	
3	49161	7701478406	✓		✓	✓			✓	✓	✓	M14x1,5 210,0mm
4	49162	8200586561 part of	✓		✓				✓	✓	✓	Ø = 20,0 mm
5	49163	8200586567 part of	✓			✓			✓	✓	✓	Ø = 20,0 mm
6	33119	8200041166	✓		✓	✓			✓	✓	✓	
7	33120	8200242025	✓		✓	✓			✓	✓	✓	
8	49124HPS	8200166159	✓		✓	✓			✓	✓		285,0 mm

RENAULT LAGUNA I 11/93→03/01

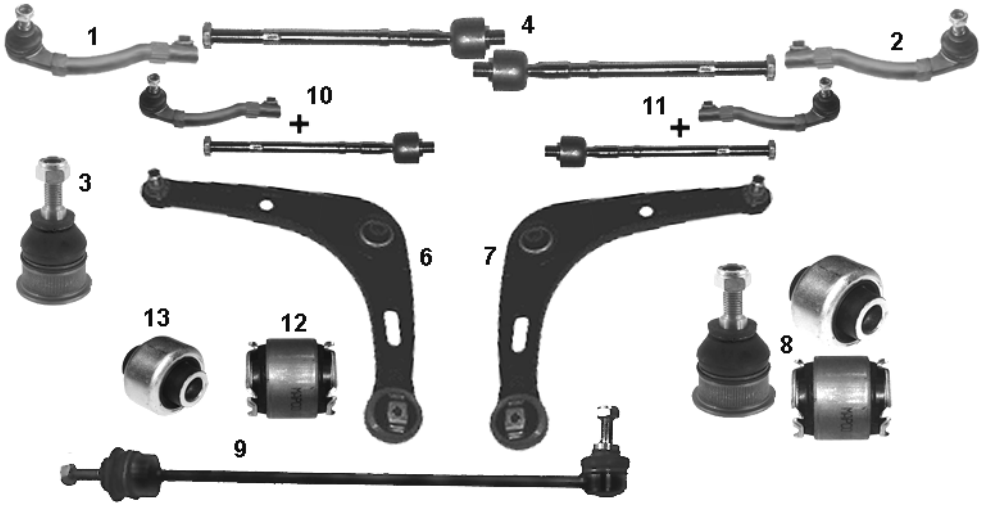

NR	MAPCO	REF								NEW	INFO
1	**19141**	6000022737	✓		✓				✓	✓		M14x1,5RHT
2	**19142**	6000022736	✓			✓			✓	✓		M14x1,5RHT
3	**19143**	7700829322	✓		✓	✓			✓	✓		
4	**19156/1**	7701469665	✓		✓	✓			✓	✓		
6	**19177**	7700823097	✓		✓				✓	✓		
7	**19178**	7700823098	✓			✓			✓	✓		
8	**19212**		✓		✓	✓			✓	✓		kit
9	**19164HPS**	7700805494	✓		✓	✓			✓	✓		
10	**19156**	7701467501	✓		✓				✓	✓		**1 + 4**
11	**19161**	7701467502	✓			✓			✓	✓		**2 + 4**
12	**33147**	7700824042	✓		✓	✓			✓	✓		
13	**33148**	7700822503	✓		✓	✓			✓	✓		

RENAULT LAGUNA II (B74), (K74) 03/01→

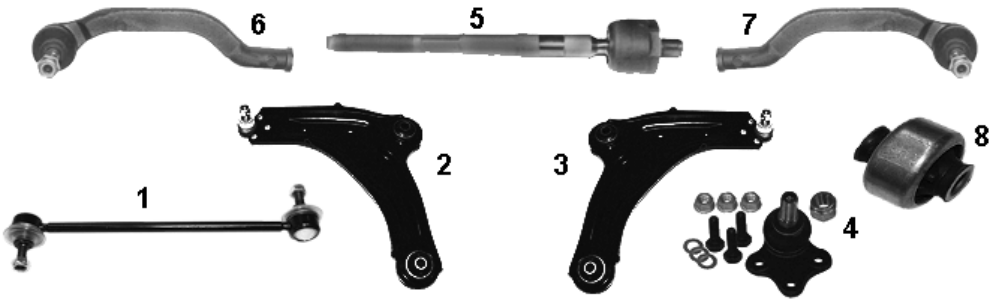

NR	MAPCO	REF								NEW	INFO
1	**49118HPS**	8200002870	✓		✓	✓			✓	✓		
2	**49131**	8200389134	✓		✓				✓	✓		
3	**49132**	8200389135	✓			✓			✓	✓		
4	**49140**	7701476576	✓		✓	✓		✓	✓	✓		
5	**49145**	7701472766	✓		✓	✓			✓	✓		M14x1,5 216 mm
6	**49143**	7701049282	✓		✓				✓	✓		
7	**49144**	7701049283	✓			✓			✓	✓		
8	**33122**	8200002869	✓		✓	✓			✓	✓	✓	

RENAULT LOGAN (LS_) 09/04→

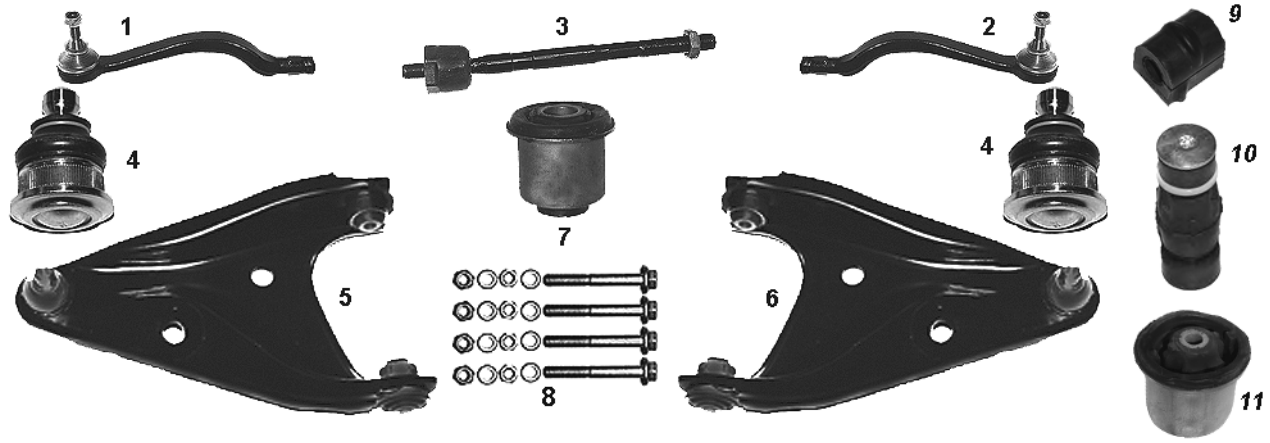

NR	MAPCO	REF								NEW	INFO
1	**49192**	6001547610	✓		✓			✓	✓	✓		
2	**49193**	6001547611	✓			✓		✓	✓	✓		
3	**49194**	6001547606	✓		✓	✓			✓	✓		
4	**49151**	6001547519	✓		✓	✓			✓	✓		Ø = 18mm
5	**49190**	8200216376	✓		✓			✓	✓	✓		
6	**49191**	8200216377	✓			✓		✓	✓	✓		
7	**33124**	6040002245	✓		✓	✓		✓	✓	✓		
8	**95137**		✓		✓	✓			✓	✓		MS
9	**33127**	6001547140	✓		✓	✓			✓	✓	✓	
10	**49160**	6001547138	✓		✓	✓			✓	✓	✓	
11	**33173**	6001549988		✓	✓	✓			✓	✓	✓	

RENAULT LOGAN Kombi (KS_) 04/07→

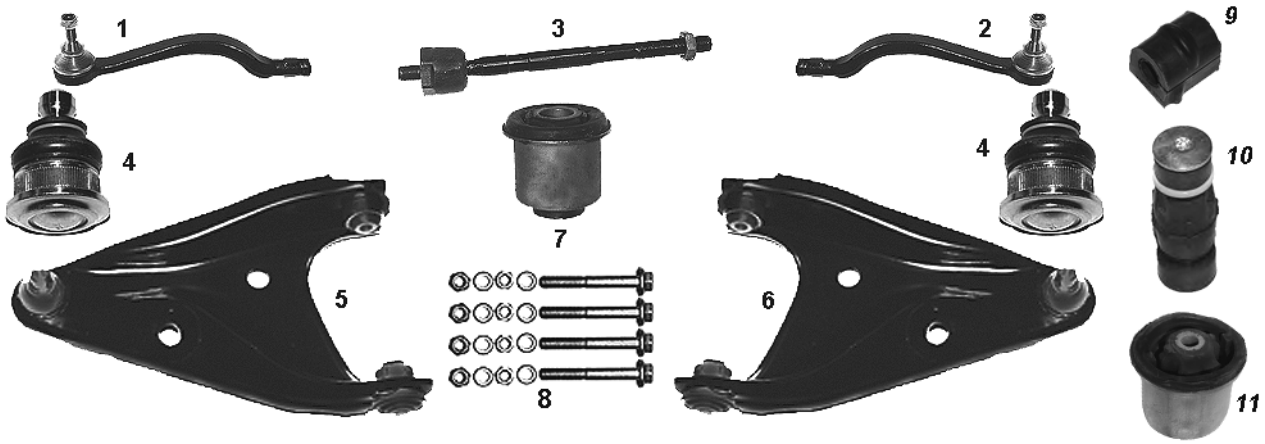

NR	MAPCO	REF			←	→	↑	↓			NEW	INFO
1	**49192**	6001547610	✓		✓			✓	✓	✓		
2	**49193**	6001547611	✓			✓		✓	✓	✓		
3	**49194**	6001547606	✓		✓	✓			✓	✓		
4	**49151**	6001547519	✓		✓	✓			✓	✓		Ø = 18mm
5	**49190**	8200216376	✓		✓			✓	✓	✓		
6	**49191**	8200216377	✓			✓		✓	✓	✓		
7	**33124**	6040002245	✓		✓	✓		✓	✓	✓		
8	**95137**		✓		✓	✓			✓	✓		MS
9	**33127**	6001547140	✓		✓	✓			✓	✓	✓	
10	**49160**	6001547138	✓		✓	✓			✓	✓	✓	
11	**33173**	6001549988		✓	✓	✓			✓	✓	✓	

RENAULT MASTER I 08/80 → 06/98

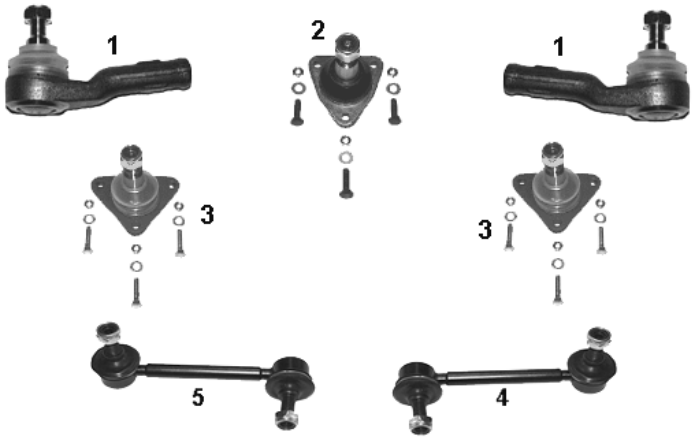

NR	MAPCO	REF			←	→	↑	↓			NEW	INFO
1	**49104**	7701462427	✓		✓	✓			✓	✓		M16x1,5RHT
2	**49105**	7701462692	✓		✓	✓	✓		✓	✓		
3	**49106**	7701462693	✓		✓	✓		✓	✓	✓		
4	**49108HPS**	7700309071	✓			✓			✓	✓		
5	**49109HPS**	7700309070	✓		✓	✓			✓	✓		

RENAULT MASTER II 07/98 →

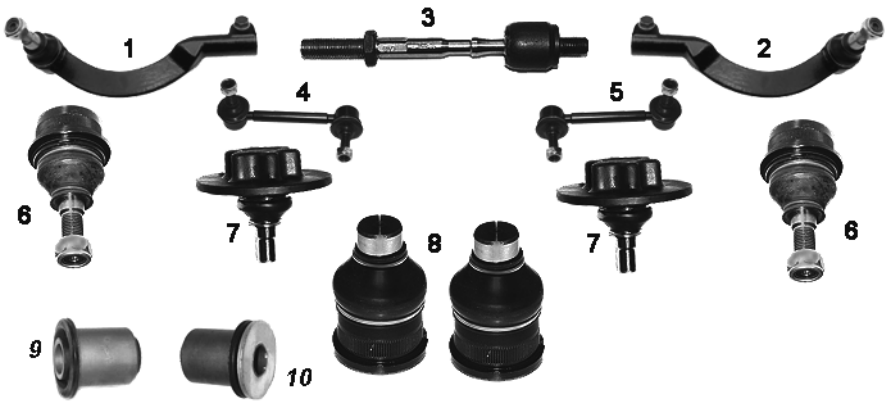

NR	MAPCO	REF			←	→	↑	↓			NEW	INFO
1	**49137**	7701470363	✓		✓				✓	✓		(M16x1,5RHT) 225mm
2	**49138**	7701470364	✓			✓			✓	✓		(M16x1,5RHT) 225mm
3	**49125**	7701470362	✓		✓	✓			✓	✓		150mm
4	**49109HPS**	7700309070	✓		✓				✓	✓		
5	**49108HPS**	7700309071	✓			✓			✓	✓		
6	**49110**	7700312851	✓		✓	✓	✓		✓	✓		aussen/ outer
7	**49156**	7701056970	✓		✓	✓			✓	✓		Innen/ inner
8	**49111**	7700312852	✓		✓	✓		✓	✓	✓		
9	**36704**	7700302122	✓		✓	✓		✓	✓	✓		
10	**36705**	7700302123	✓		✓	✓		✓	✓	✓		hinten/ rear

RENAULT MÉGANE + MÉGANE SCENIC I 11/95→ 03/99







NR	MAPCO	REF			←	→	↑	↓			NEW	INFO
1	**36128**		✓		✓	✓			✓	✓		
2	**36137**		✓		✓	✓			✓	✓		
3	**36126**		✓		✓	✓			✓	✓		

RENAULT MÉGANE 1.4 - 1.6 - 2.0 - 1.9D - 1.9TD - CABRIO 1996→
RENAULT MÉGANE SCÉNIC 1.4 - 1.6 - 2.0 - 1.9TD 01/97→ 09/99

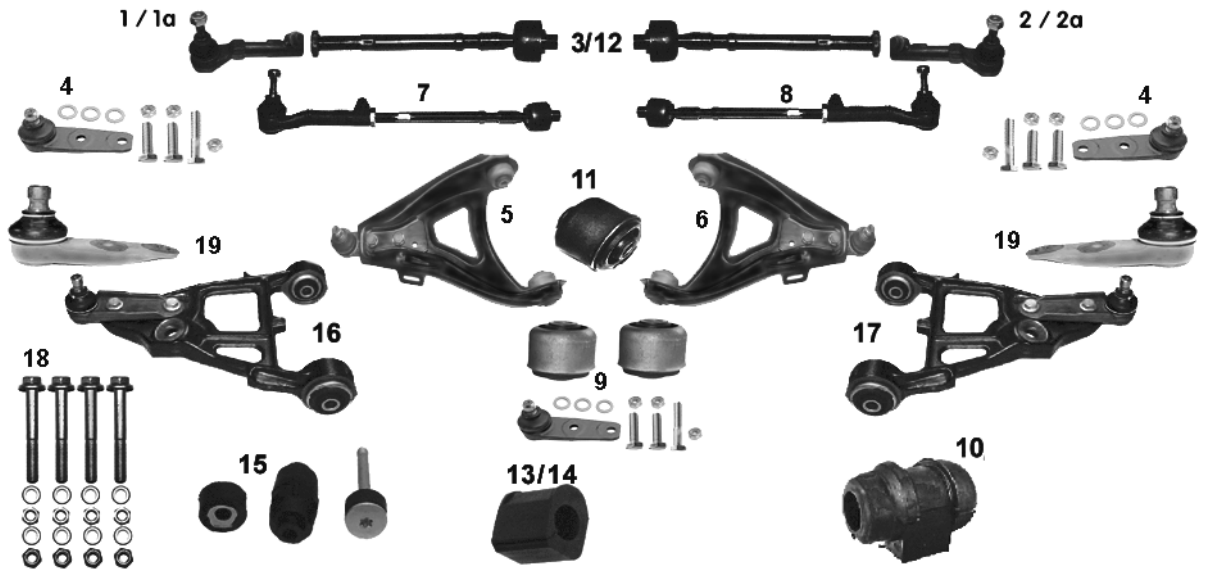

NR	MAPCO	REF								NEW	INFO
1	**19169**	7701041311	✓		✓				✓	✓	→02/99 M14x1,5RHT
1a	**49135**	7701474492	✓		✓				✓	✓	03/99→ 12,20mm M14x1,5RHT
2	**19170**	7701041312	✓			✓			✓	✓	→02/99 M14x1,5RHT
2a	**49136**	7701474493	✓			✓			✓	✓	03/99→ 12,20mm M14x1,5RHT
3	**49119**	7701472087	✓		✓	✓			✓	✓	**TRW** 285 mm M14x1,5RHT
3	**19171**	7701469280	✓		✓	✓			✓	✓	**TRW** 256 mm M14x1,5RHT
4	**19109**	7701468883	✓		✓	✓			✓	✓	M10 STOP 1.9 dTi,1.9TDi , Scenic
5	**19147**	7700831368	✓		✓				✓	✓	✓ MÉGANE
6	**19148**	7700831369	✓			✓			✓	✓	✓ MÉGANE
7	**19172**	7701468952	✓		✓				✓	✓	**1+3** **TRW**
8	**19173**	7701468953	✓			✓			✓	✓	**2+3** **TRW**
9	**19210**		✓		✓	✓			✓	✓	STOP 1.9 dTi,1.9TDi , Scenic **Kit**
10	**33145**	7700784170	✓		✓	✓			✓	✓	
11	**33146**	7700840741	✓		✓	✓			✓	✓	
12	**49103**	7701469502	✓		✓	✓			✓	✓	256 mm **SMI** M12x1.0RHT
13	**33167**	7700835929	✓		✓	✓			✓	✓	∅ 23 mm
14	**33118**	7700785788	✓		✓	✓			✓	✓	∅ 21 mm
15	**33172**	7700847382	✓		✓	✓			✓	✓	
16	**49129**	7700834916	✓		✓				✓	✓	✓1.9 dTi,1.9TDi , ✓Scenic
17	**49130**	7700834917	✓			✓			✓	✓	✓1.9 dTi,1.9TDi , ✓Scenic
18	**95137**		✓		✓	✓			✓	✓	MS
19	**49139**	7700828843	✓		✓	✓			✓	✓	M13 ✓1.9 dTi,1.9TDi , ✓Scenic

RENAULT MÉGANE II
RENAULT MÉGANE II

11/02→
09/03→

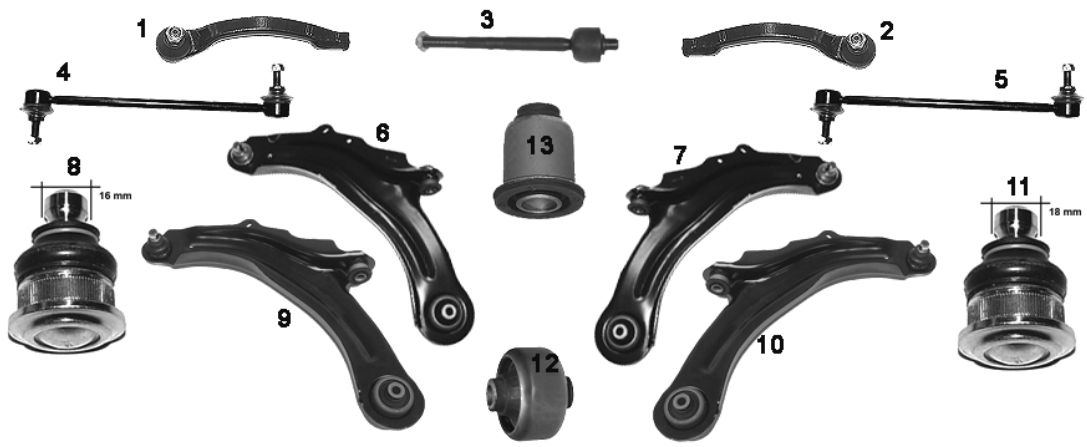

NR	MAPCO	REF								NEW	INFO
1	**49147**	7701474795	✓		✓				✓	✓	
2	**49148**	7701474796	✓			✓			✓	✓	
3	**49149**	7701474448 part of	✓		✓	✓			✓	✓	
4	**49124HPS**	8200166159	✓		✓	✓			✓	✓	285,0mm
5	**49154HPS**	8200669066	✓		✓	✓			✓	✓	266,0mm
6	**49127**	8200255760	✓		✓				✓	✓	ø = 16mm
7	**49128**	8200255761	✓			✓			✓	✓	ø = 16mm
8	**49150**	8200255761 part of	✓		✓	✓			✓	✓	ø = 16mm →01/03
9	**49133**	8200298454	✓		✓				✓	✓	ø = 18mm
10	**49134**	8200298455	✓			✓			✓	✓	ø = 18mm
11	**49151**	8200298455 part of	✓		✓	✓			✓	✓	ø = 18mm 02/03→
12	**33119**	8200041166	✓		✓	✓			✓	✓	
13	**33120**	8200242025	✓		✓	✓			✓	✓	

RENAULT MODUS 12/04→

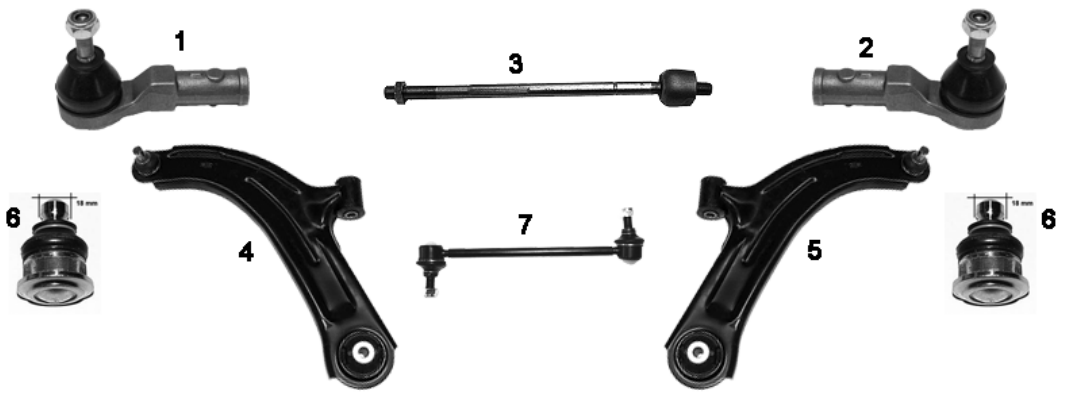

NR	MAPCO	REF								NEW	INFO
1	**49135**	7701474492	✓		✓				✓	✓		12,20mm M14x1,5RHT
2	**49136**	7701474493	✓			✓			✓	✓		12,20mm M14x1,5RHT
3	**49159**	7701475841	✓		✓	✓			✓	✓	✓	**310,0mm**
4	**49152**	8200346941	✓		✓			✓	✓	✓		
5	**49153**	8200346942	✓			✓		✓	✓	✓		
6	**49151**	8200298455 part of	✓		✓	✓			✓	✓		ø = 18mm
7	**19120HPS**	8200127308	✓		✓	✓			✓	✓		M10x1,25 248,0mm

RENAULT SCÉNIC II 06/03→



NR	MAPCO	REF								NEW	INFO
1	**49133**	8200298454	✓		✓				✓	✓		ø = 18mm
2	**49134**	8200298455	✓			✓			✓	✓		ø = 18mm
3	**49151**	8200298455 part of	✓		✓	✓			✓	✓		ø = 18mm
4	**33119**	8200041166	✓		✓	✓			✓	✓		
5	**33120**	8200242025	✓		✓	✓			✓	✓		
6	**49124HPS**	8200166159	✓		✓	✓			✓	✓		

RENAULT R 4 - R 5 - R4 FOURGONETTE - R6 10/62→ 04/86

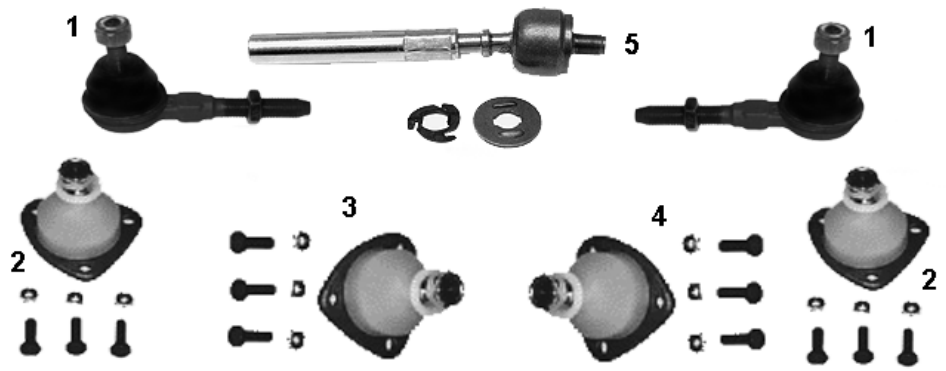

NR	MAPCO	REF								NEW	INFO
1	19105	7701460955	✓		✓	✓			✓	✓		M14x1,5RHT
2	19102	7701451904	✓		✓	✓	✓		✓	✓		
3	19122	7701463686	✓		✓	✓		✓	✓	✓		
4	19123	7701463687	✓		✓	✓		✓	✓	✓		
5	19103	7700656318	✓		✓	✓			✓	✓		

RENAULT R4 10/62→ 12/92
RENAULT R5 01/72→ 07/84
RENAULT R6 06/68→ 12/92



NR	MAPCO	REF								NEW	INFO
1	36138		✓		✓	✓			✓	✓		
2	36139		✓		✓	✓			✓	✓		
3	36140		✓		✓	✓			✓	✓		

RENAULT SUPER 5 EXPRESS / EXTRA (F40…) 10/84→ 12/96

NR	MAPCO	REF								NEW	INFO
1	36131		✓		✓	✓			✓	✓		1

RENAULT R 5 - SUPER 5 - EXPRESS - RODEO 10/84→12/96

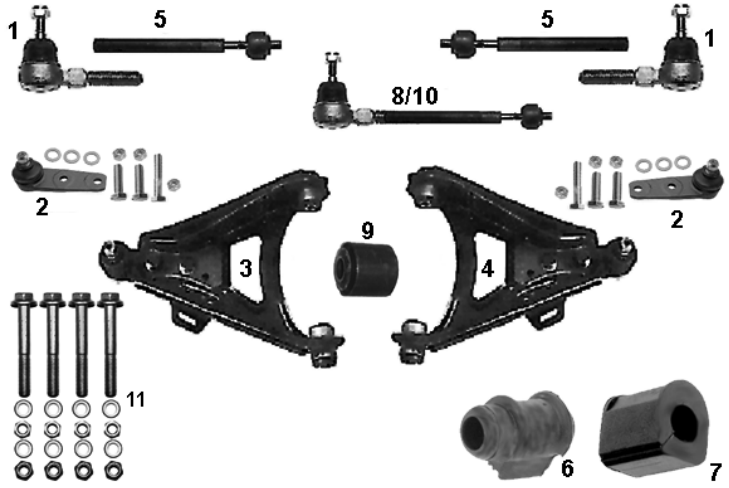

NR	MAPCO	REF									INFO
1	**19105**	7701460955	✓		✓	✓			✓	✓		→ 09/84 M14x1,5RHT
1	**19108**	7701464151	✓		✓	✓			✓	✓		09/84→ M14x1,5RHT
2	**19109**	7701468883	✓		✓	✓			✓	✓		
3	**19162**	7700783455	✓		✓				✓	✓		
4	**19163**	7700783456	✓			✓			✓	✓		
5	**19166/1**	7701463346	✓		✓	✓			✓	✓		274,0 mm
6	**33115**	7700760265	✓		✓	✓			✓	✓		Ø 20mm
7	**33116**	7700763934	✓		✓	✓			✓	✓		Ø 20mm
8	**19166**		✓		✓	✓			✓	✓		→ 09/84 **19105 + 19166/1**
9	**33100**	7704000681	✓		✓	✓			✓	✓		
10	**49107**		✓		✓	✓			✓	✓		09/84→ **19108 + 19166/1**
11	**95137**		✓		✓	✓			✓	✓		MS

RENAULT R 9 (L42) 09/81→ 12/88
RENAULT R11 (B/C37) 03/83→ 07/89

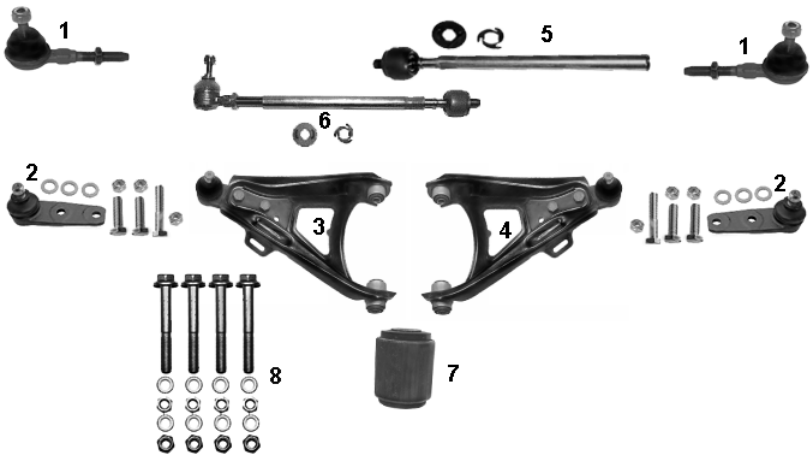

NR	MAPCO	REF									INFO
1	**19108**	7701464151	✓		✓	✓			✓	✓		M14x1,5RHT
2	**19109**	7701462181	✓		✓	✓			✓	✓		
3	**19124**	7700783449	✓		✓				✓	✓		
4	**19125**	7700783450	✓			✓			✓	✓		
5	**19121**	7701462170	✓		✓	✓			✓	✓		
6	**19106**	7701462540	✓		✓	✓			✓	✓		**1 + 5**
7	**33100**	7704000681	✓		✓	✓			✓	✓		
8	**95137**		✓		✓	✓			✓	✓		MS

RENAULT R9/R11 09/81→ 12/89

NR	MAPCO	REF			←	→	↑	↓			NEW	INFO
1	36120		✓		✓	✓			✓	✓		

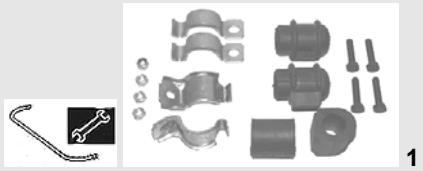
1

RENAULT R18 (GTD - GTS - GTX - TD - TX - Turbo) 04/78→ 07/86
RENAULT FUEGO 02/80→ 10/85

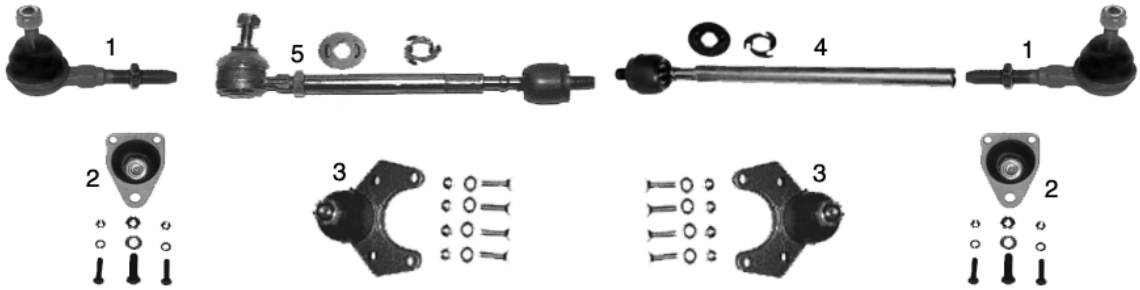

NR	MAPCO	REF			←	→	↑	↓			NEW	INFO
1	**19108**	7701464151	✓		✓	✓			✓	✓		M14x1,5RHT
2	**19116**	7701461332	✓		✓	✓	✓		✓	✓		
3	**19115**	7701461331	✓		✓	✓		✓	✓	✓		
4	**19107/1**	7701463025	✓		✓	✓			✓	✓		220 mm
5	**19107**	7701463025										**1 + 4**

RENAULT R19 B/C/L... 09/88 → 12/95

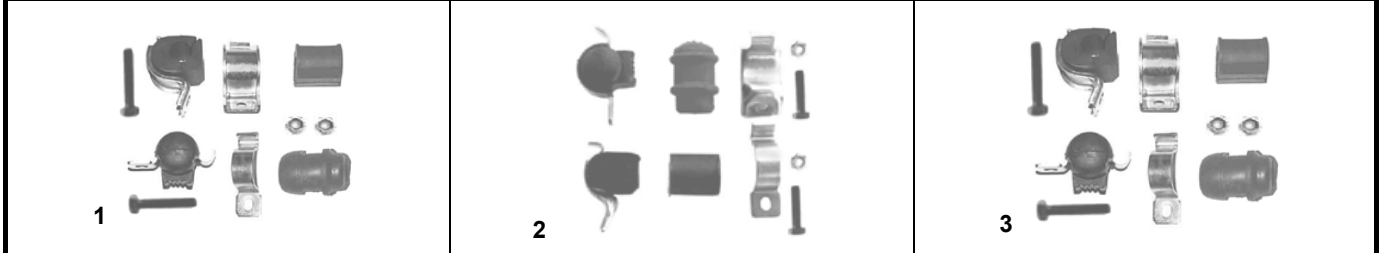

NR	MAPCO	REF			←	→	↑	↓			NEW	INFO
1	**36127**		✓		✓	✓			✓	✓		
2	**36128**		✓		✓	✓			✓	✓		
3	**36126**		✓		✓	✓			✓	✓		

RENAULT R19 - R19 CHAMADE - R19 16V 01/88→ 12/95



NR	MAPCO	REF								NEW	INFO
1	**19130**	6000030047	✓		✓				✓	✓		M14x1,5RHT
2	**19130/1**	6000030048	✓			✓			✓	✓		M14x1,5RHT
3	**19109**	7701468883	✓		✓	✓			✓	✓		
4	**19147**	7700831368	✓		✓				✓	✓		STOP 16V
5	**19148**	7700831369	✓			✓			✓	✓		STOP 16V
6	**19150**	7701467235	✓		✓				✓	✓		
7	**19151**	7701467237	✓			✓			✓	✓		
8	**19167**	7700829841	✓		✓				✓	✓		✓ 16V
9	**19168**	7700829842	✓			✓			✓	✓		✓ 16V
10	**19210**		✓		✓	✓			✓	✓		Kit STOP 16V
11	**33145**	7700784170	✓		✓	✓			✓	✓		∅ 18 mm
12	**33146**	7700840741	✓		✓	✓			✓	✓		STOP 16V
13	**33118**	7700785788	✓		✓	✓			✓	✓		∅ 23 mm
14	**33117**	7700771562	✓		✓	✓			✓	✓		∅ 21 mm
15	**95137**		✓		✓	✓			✓	✓		MS
16	**19150/1**	**7701465917 part**	✓		✓	✓			✓	✓		M14x1,5RHT **290 mm**

RENAULT R20 (GTD - GTL - L - TD - TL 1981→12/83
RENAULT R30 (TD) 02/75→03/86

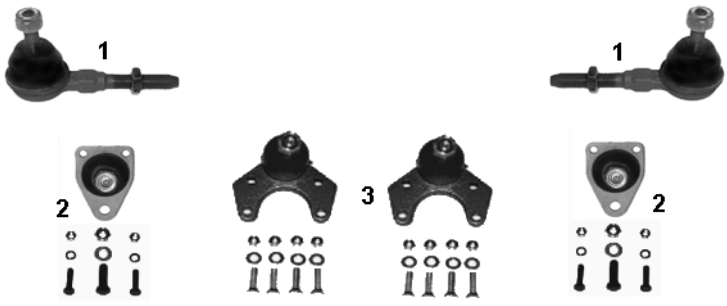

NR	MAPCO	REF								NEW	INFO
1	**19108**	7701464151	✓		✓	✓			✓	✓		M14x1,5RHT
2	**19116**	7701461332	✓		✓	✓	✓		✓	✓		
3	**19115**	7701461331	✓		✓	✓		✓	✓	✓		

RENAULT R21 1.4, 1.7, 1.9D+SD+GSD 03/86→ 12/95





NR	MAPCO	REF									NEW	INFO
1	36124		✓		✓	✓			✓	✓		
2	36125		✓		✓	✓			✓	✓		

RENAULT R21 2.1D, 2.1TD 03/86→ 12/95





NR	MAPCO	REF									NEW	INFO
1	36121		✓		✓	✓			✓	✓		
2	36122		✓		✓	✓			✓	✓		

RENAULT R21(K48) 2.0+ 2.2 03/86→ 06/94





NR	MAPCO	REF									NEW	INFO
1	36129		✓		✓	✓			✓	✓		
2	36130		✓		✓	✓			✓	✓		

RENAULT R21 + NEVADA 03/86→ 06/94

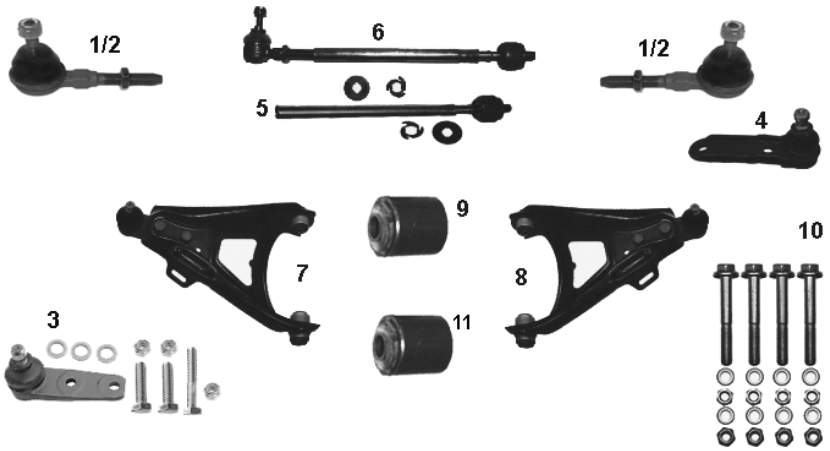

NR	MAPCO	REF									NEW	INFO
1	19108	7701464151	✓		✓	✓			✓	✓		✓Benzin / petrol M14x1,5RHT
2	19131	7701464441	✓		✓	✓			✓	✓		✓D M14x1,5RHT
3	19109	7701468883	✓		✓	✓			✓	✓		✓Benzin / petrol
4	19132	7701464037	✓		✓	✓			✓	✓		✓D
5	19121		✓		✓	✓			✓	✓		
6	19106	7701462540	✓		✓	✓			✓	✓		1 + 5
7	19124	7700783449	✓		✓				✓	✓		
8	19125	7700783450	✓			✓			✓	✓		
9	33102	7700722687	✓		✓	✓			✓	✓		39,0 mm
10	95137		✓		✓	✓			✓	✓		MS
11	33101	7700754515	✓		✓	✓			✓	✓		37,0 mm

RENAULT R25 04/84→12/93

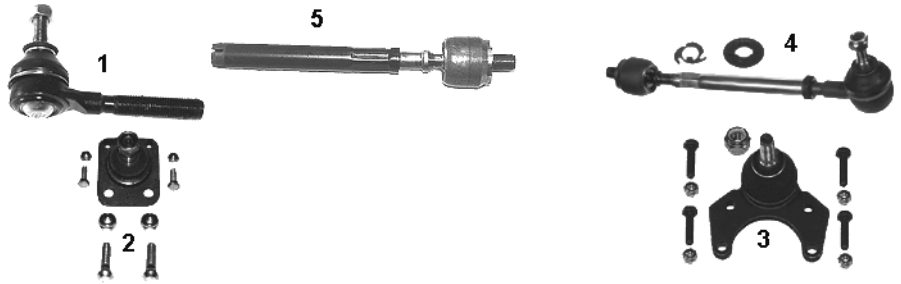

NR	MAPCO	REF			←	→	↑	↓			NEW	INFO
1	**19108**	7701464151	✓		✓	✓			✓	✓		M14x1,5RHT
2	**19127**	7701463229	✓		✓	✓	✓		✓	✓		
3	**19128**	7701465689	✓		✓	✓		✓	✓	✓		
4	**19126**	7701646313	✓		✓	✓			✓	✓		1 + 5
5	**19198**	7701469229	✓		✓	✓			✓	✓		190 mm

RENAULT SAFRANE 04/95→12/00

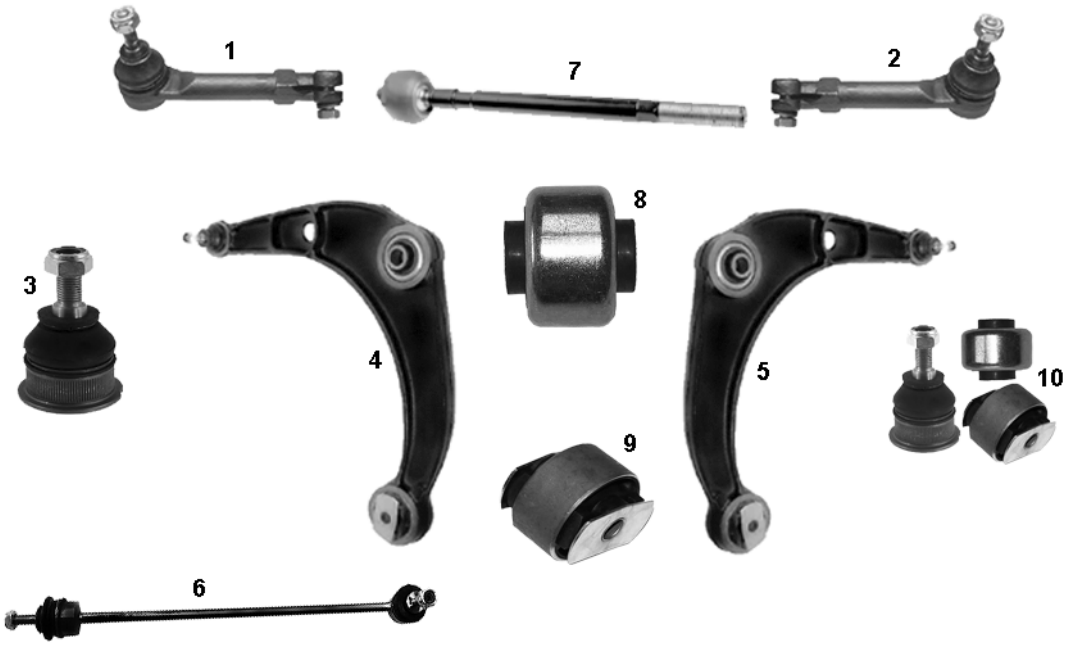

NR	MAPCO	REF			←	→	↑	↓			NEW	INFO
1	**19144**	6000022714	✓		✓				✓	✓		M14x1,5RHT
2	**19145**	6000022715	✓			✓			✓	✓		M14x1,5RHT
3	**19143**	7700829322	✓		✓	✓			✓	✓		
4	**19186**	7700807580	✓		✓				✓	✓		
5	**19187**	7700807581	✓			✓			✓	✓		
6	**19164HPS**	7700805494	✓		✓	✓			✓	✓		
7	**19188**	7701469569	✓		✓	✓			✓	✓		
8	**33171**	7700806239	✓		✓	✓			✓	✓		
9	**33170**	7700806238	✓		✓	✓			✓	✓		
10	**19216**		✓		✓	✓			✓	✓		Kit

RENAULT SCENIC (JA) 09/99→

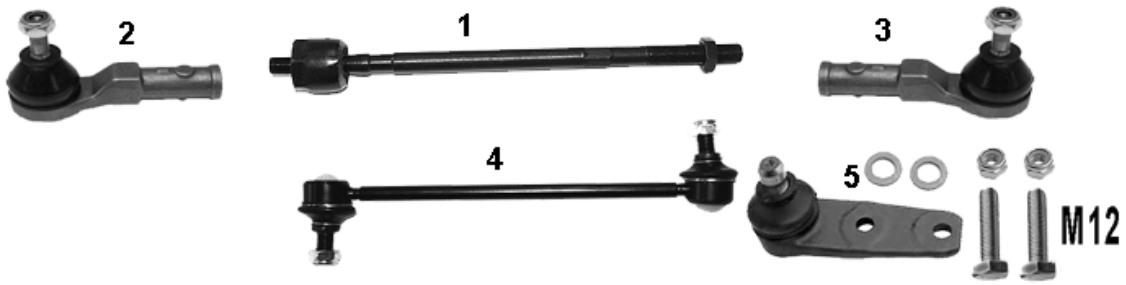

NR	MAPCO	REF								NEW	INFO
1	**49126**	7701471844	✓		✓	✓			✓			**SMI**
2	**49135**	7701474492	✓		✓				✓	✓		12,20mm M14x1,5RHT **SMI**
3	**49136**	7701474493	✓			✓			✓	✓		12,20mm M14x1,5RHT **SMI**
4	**49146HPS**	7700437136	✓		✓	✓			✓	✓		**1.9 dCi + 2.0 16V** 258,00 mm
5	**19109/2**	7700430766	✓		✓	✓			✓	✓	✓	**Ø 12mm**

RENAULT THALIA 08/00→

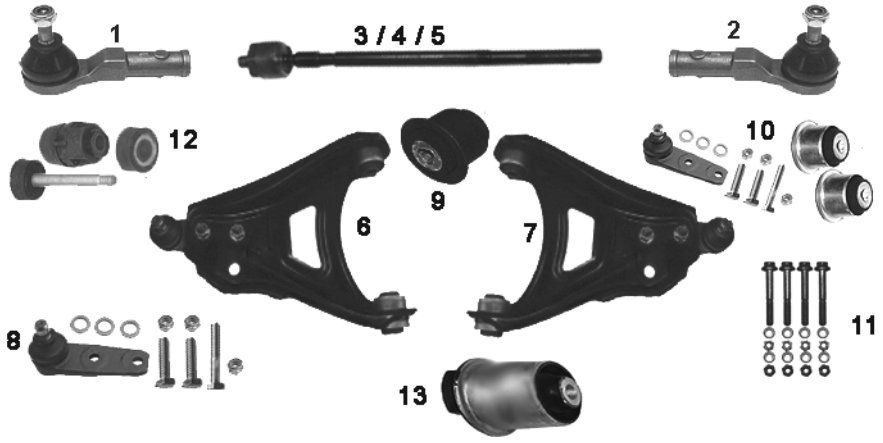

NR	MAPCO	REF								NEW	INFO
1	**49135**	7701474492	✓		✓				✓	✓		12,20mm M14x1,5RHT
2	**49136**	7701474493	✓			✓			✓	✓		12,20mm M14x1,5RHT
3	**19195**	7701472113	✓		✓	✓				✓		**258mm** (**TRW**)
4	**49117/1**	7701472120	✓		✓	✓				✓		Außen M12x1,5 (**SMI**) **300mm**
5	**51117/1**	7701472734	✓		✓	✓			✓	✓		Außen M14x1,5 (**TRW**) **296mm**
6	**19196**	7700425227	✓		✓				✓	✓		
7	**19197**	7700425228	✓			✓			✓	✓		
8	**19109**	7701468883	✓		✓	✓			✓	✓		
9	**33165**	7700419249	✓		✓	✓			✓	✓		
10	**19208**		✓		✓	✓			✓	✓		Kit
11	**95137**		✓		✓	✓			✓	✓		MS
12	**33164**	7700799404	✓		✓	✓			✓	✓		
13	**33128**	7700429441		✓	✓	✓			✓	✓	✓	

RENAULT TRAFIC 03/80→ 05/97


1


2


3

NR	MAPCO	REF									INFO
1	36143		✓		✓	✓			✓	✓	
2	36144		✓		✓	✓			✓	✓	
3	36145		✓		✓	✓			✓	✓	

RENAULT TRAFIC 03/80→03/01

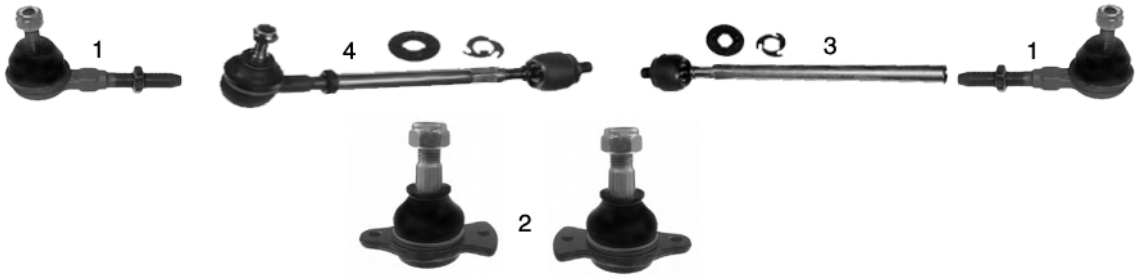

NR	MAPCO	REF									INFO
1	19136	7701461770	✓		✓	✓			✓	✓	M14x1,5RHT
2	19135	7701461667	✓		✓	✓			✓	✓	
3	19129/1		✓		✓	✓			✓	✓	
4	19129	7701463035	✓		✓	✓			✓	✓	1 + 3

RENAULT TRAFIC (_L) 03/01→

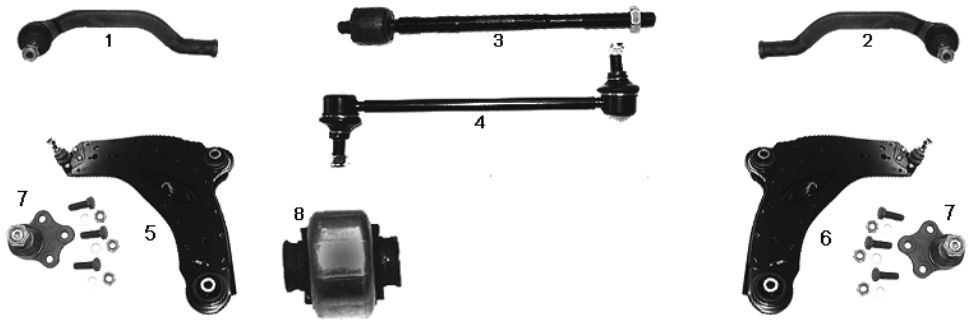

NR	MAPCO	REF									INFO
1	49143	7701049282	✓		✓				✓	✓	
2	49144	7701049283	✓			✓			✓	✓	
3	49155	7701473333	✓		✓	✓			✓	✓	280,0mm
4	49118HPS	8200002870	✓		✓	✓			✓	✓	
5	49141	8200054003	✓		✓			✓	✓	✓	
6	49142	8200054006	✓			✓		✓	✓	✓	
7	49140	7701476576	✓		✓	✓		✓	✓	✓	
8	33122	8200002869	✓		✓	✓			✓	✓	

RENAULT TWINGO (C06_) 1993→

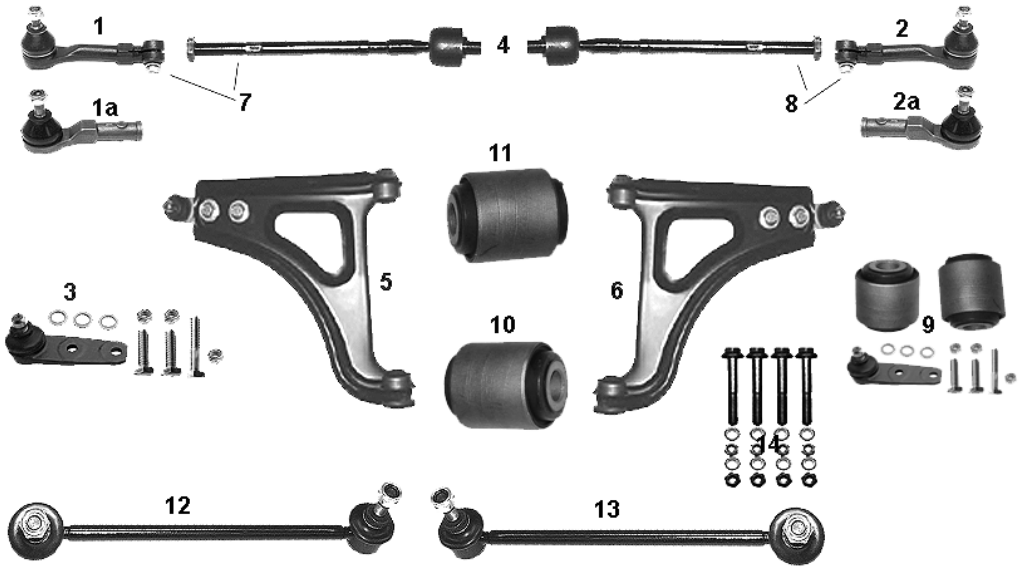

NR	MAPCO	REF								NEW	INFO
1	**19139**	6000022730	✓		✓				✓	✓	STOP 1.2 16V M14x1,5RHT
1a	**49135**	7701474492	✓		✓				✓	✓	✓ 1.2 16V 12,20mm M14x1,5RHT
2	**19140**	6000022731	✓			✓			✓	✓	STOP 1.2 16V M14x1,5RHT
2a	**49136**	7701474493	✓			✓			✓	✓	✓ 1.2 16V 12,20mm M14x1,5RHT
3	**19109**	7701468883	✓		✓	✓			✓	✓	
4	**19149**	7701469517	✓		✓	✓			✓	✓	
5	**19157**	7700820028	✓		✓				✓	✓	
6	**19158**	7700820029	✓			✓			✓	✓	
7	**19160**	7701467218	✓		✓				✓	✓	**1 + 4**
8	**19159**	7701467219	✓			✓			✓	✓	**2 + 4**
9	**19211**		✓		✓	✓			✓	✓	Kit
10	**33143**	700813364	✓		✓	✓			✓	✓	
11	**33144**	700819829	✓		✓	✓			✓	✓	
12	**49120HPS**	8200040618	✓		✓				✓	✓	2002→
13	**49121HPS**	8200050191	✓			✓			✓	✓	2002→
14	**95137**		✓		✓	✓			✓	✓	Chassis VF1C0680520043526-> MS

RENAULT VEL SATIS 06/02→



NR	MAPCO	REF								NEW	INFO
1	**49143**	7701049282	✓		✓				✓	✓	
2	**49144**	7701049283	✓			✓			✓	✓	
3	**49118HPS**	8200002870	✓		✓	✓			✓	✓	
4	**49140**	7701476576	✓		✓	✓		✓	✓	✓	
5	**33122**	8200002869	✓		✓	✓			✓	✓	

ROVER

ROVER AUSTIN METRO 10/80→ 04/90

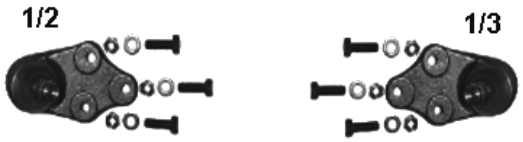

NR	MAPCO	REF										INFO
1	**19949**	GSJ729	✓		✓	✓			✓	✓		✓ 155 TYRES
2	**19955**	GSJ731	✓		✓				✓	✓		✓ 185 TYRES
3	**19954**	GSJ730	✓			✓			✓	✓		✓ 185 TYRES

ROVER MG METRO 1984→ 1990

NR	MAPCO	REF										INFO
2	**19951**	GSJ207	✓		✓	✓			✓	✓		→ 09/84 

ROVER 100 03/90→12/98

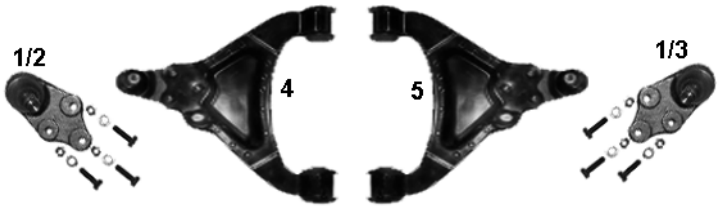

NR	MAPCO	REF										INFO
1	**19949**	GSJ729	✓		✓	✓			✓	✓		✓ 155 TYRES
2	**19955**	GSJ731	✓		✓				✓	✓		✓ 185 TYRES
3	**19954**	GSJ730	✓			✓			✓	✓		✓ 185 TYRES
4	**49903**	GSJ415	✓		✓				✓	✓		1990 →
5	**49904**	GSJ416	✓			✓			✓	✓		1990 →

ROVER 200 (XH) 09/85→10/89



NR	MAPCO	REF										INFO
1	**59330**	51361-SB2-013	✓		✓			✓	✓	✓		
2	**59331**	51351-SB2-013	✓			✓		✓	✓	✓		
3	**59319**	53540-611-020	✓		✓	✓			✓	✓		M12x1,25 RHT
4	**19958**	KHC10011	✓		✓	✓			✓	✓		

ROVER 200 214 - 216 - 218 — 10/89→03/00

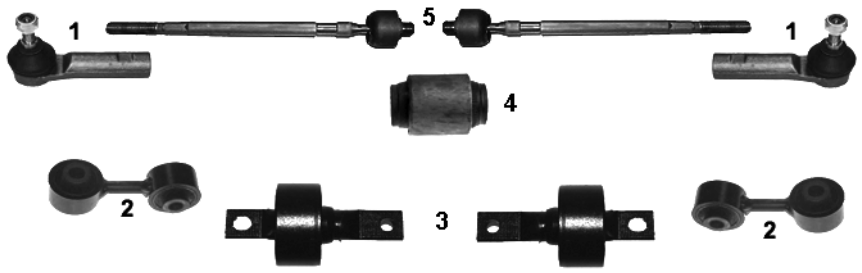

NR	MAPCO	REF			←	→	↑	↓			NEW	INFO
1	**19956**	GSJ826	✓		✓	✓			✓	✓		M14x1,5RHT
2	**19957**	EGP1662	✓		✓	✓			✓	✓		11/89→
3	**33223**	RGX10007		✓	✓	✓			✓	✓		
4	**33960**	EGP1673	✓		✓	✓			✓	✓		
5	**49911**	GSV1170	✓		✓	✓			✓	✓		01/95→

ROVER 400 414 - 416 - 420 TD — 04/90→ 1995
ROVER 400 TOURER — 05/95→ 03/00

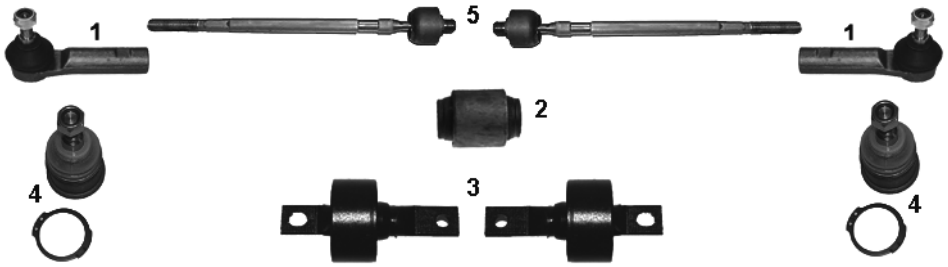

NR	MAPCO	REF			←	→	↑	↓			NEW	INFO
1	**19956**	GSJ826	✓		✓	✓			✓	✓		M14x1,5RHT
2	**33960**	EGP1673	✓		✓	✓			✓	✓		
3	**33223**	RGX10007		✓	✓	✓			✓	✓		
4	**49510**	GSJ499	✓		✓	✓		✓	✓	✓		
5	**49911**	GSV1170	✓		✓	✓			✓	✓		

ROVER 400 414 - 416 - 420 TD

05/95→ 03/00

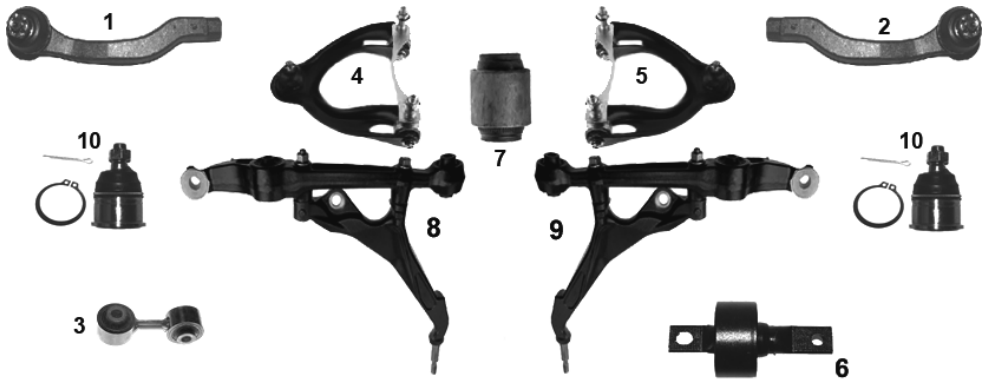

NR	MAPCO	REF								NEW	INFO
1	**19508**	GSJ496	✓		✓				✓	✓		M14x1,5RHT
2	**19509**	GSJ495	✓			✓			✓	✓		M14x1,5RHT
3	**19957**	EGP1662	✓			✓			✓	✓		
4	**49502**	GSJ485	✓		✓		✓		✓	✓		
5	**49503**	GSJ486	✓			✓	✓		✓	✓		
6	**33223**	RGX10007		✓	✓	✓			✓	✓		
7	**33960**	EGP1673	✓		✓	✓			✓	✓		
8	**49215**	GSJ836	✓		✓				✓	✓		
9	**49216**	GSJ835	✓			✓			✓	✓		
10	**49510**	GSJ499	✓		✓	✓		✓	✓	✓		

ROVER 600

1993→ 1999

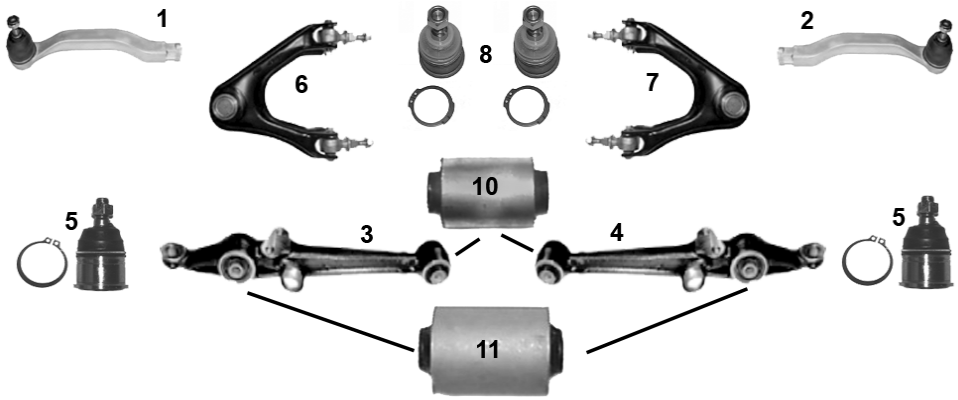

NR	MAPCO	REF								NEW	INFO
1	**19504**	GSJ407	✓		✓				✓	✓		M14x1,5RHT
2	**19505**	GSJ408	✓			✓			✓	✓		M14x1,5RHT
3	**49508**	RBJ100720	✓		✓			✓	✓	✓		
4	**49509**	RBJ100690	✓			✓		✓	✓	✓		
5	**19507**	GSJ1002	✓		✓	✓		✓	✓	✓		
6	**49506**	GSJ423	✓		✓		✓		✓	✓		
7	**49507**	GSJ424	✓			✓	✓		✓	✓		
8	**19507**	GSJ1002	✓		✓	✓	✓		✓	✓		
10	**33522**	51393-SE0-003	✓		✓	✓		✓	✓	✓		
11	**33522**	51393-SE0-003	✓		✓	✓		✓	✓	✓		

ROVER 800

10/86→02/99



NR	MAPCO	REF								NEW	INFO
1	**59371**	GSJ 279	✓		✓				✓	✓		M12x1,25 RHT Konus 14,0 mm
2	**59372**	GSJ 280	✓			✓			✓	✓		M12x1,25 RHT Konus 14,0 mm
3	**59333**	GSJ295	✓		✓	✓			✓	✓		

ROVER 25

1999 →



NR	MAPCO	REF								NEW	INFO
1	**19956**	GSJ 288	✓		✓	✓			✓	✓		
2	**19957**	EGP1662	✓		✓	✓			✓	✓		

ROVER 45 (RT)

02/00 →

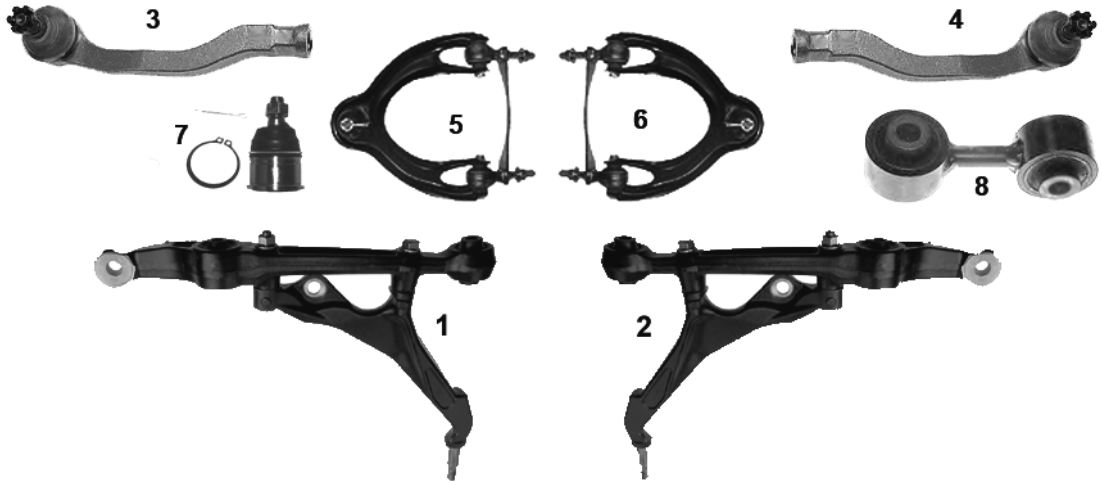

NR	MAPCO	REF									NEW	INFO
1	**49215**	GSJ836	✓		✓			✓	✓	✓		
2	**49216**	GSJ835	✓			✓		✓	✓	✓		
3	**19500**	GSJ1170	✓		✓				✓	✓		
4	**19501**	GSJ1169	✓			✓			✓	✓		
5	**59508**	RBJ102130	✓		✓		✓		✓	✓		
6	**59509**	RBJ102120	✓			✓	✓		✓	✓		
7	**49510**	GSJ499	✓		✓	✓		✓	✓	✓		
8	**19957**	EGP1662	✓		✓	✓			✓	✓		

ROVER 75(RJ) 02/99→
ROVER 75 Tourer (RJ) 08/01→

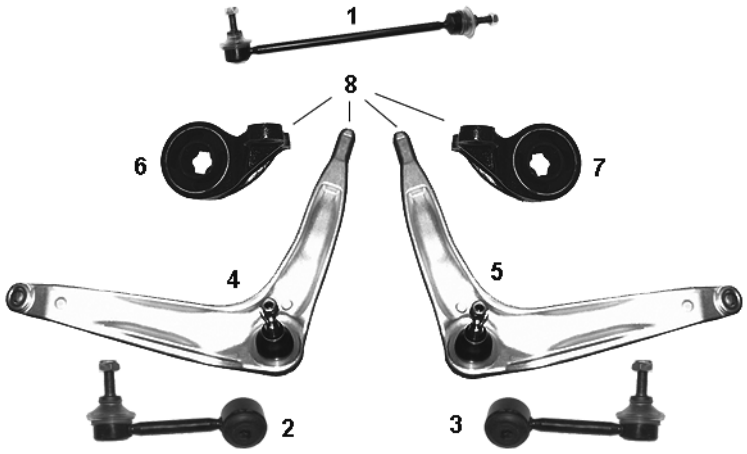

NR	MAPCO	REF			←	→	↑	↓		NEW	INFO
1	**59516HPS**	RBM-100240	✓		✓	✓			✓	✓	
2	**59517HPS**	RGD 100571		✓		✓			✓	✓	
3	**59518HPS**	RGD 100561		✓	✓				✓	✓	
4	**51690**	GSJ1000	✓		✓			✓	✓	✓	
5	**51691**	GSJ1001	✓			✓		✓	✓	✓	
6	**36961**	RBX101760	✓		✓			✓	✓	✓	
7	**36962**	RBX101770	✓			✓		✓	✓	✓	
8	**53690**		✓		✓	✓		✓	✓	✓	axle kit

SAAB

SAAB 900 I 1979 → 1992



NR	MAPCO	REF			←	→	↑	↓		NEW	INFO
1	**19982**	8993354	✓		✓	✓			✓	✓	
2	**19983**	8993388	✓		✓	✓			✓	✓	19,2 mm

SAAB 900 II

07/93 → 12/98

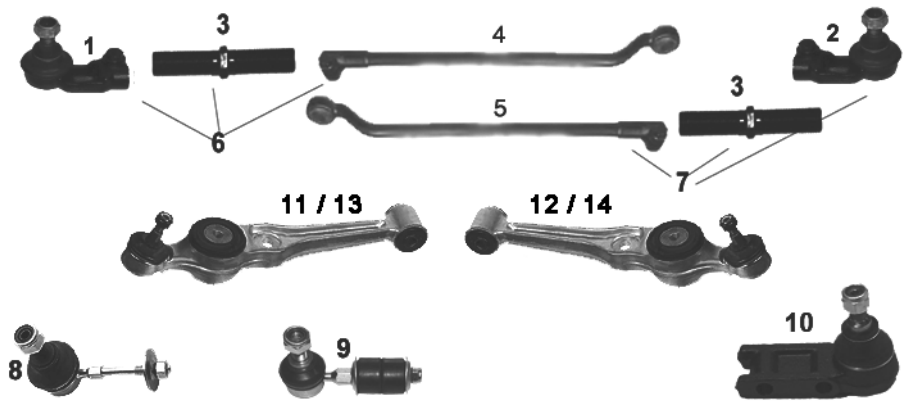

NR	MAPCO	REF			←	→	↑	↓			NEW	INFO
1	**19610**	4242749	✓		✓				✓	✓		
2	**19611**	4242756	✓			✓			✓	✓		
3	**49604**	4242731	✓		✓	✓			✓	✓		
4	**49752**	4242673	✓		✓				✓	✓		
5	**49753**	4242681	✓			✓			✓	✓		
6	**49750**	4242681S1	✓		✓				✓	✓		
7	**49751**	4242673S1	✓			✓			✓	✓		
8	**19607**	350263	✓		✓	✓			✓	✓		
9	**19607/8HPS**	350263S1	✓		✓	✓			✓	✓		
10	**19983**	8993388	✓		✓	✓			✓	✓		19,2 mm
11	**49983**	424 8431	✓		✓			✓	✓	✓	✓	Chassis ->S2012271
12	**49984**	424 8449	✓			✓		✓	✓	✓	✓	Chassis ->S2012271
13	**19984**	454 3450	✓		✓			✓	✓	✓		Chassis S2012272 ->
14	**19985**	454 3468	✓			✓		✓	✓	✓		Chassis S2012272 ->

SAAB 9000 04/85 →12/98

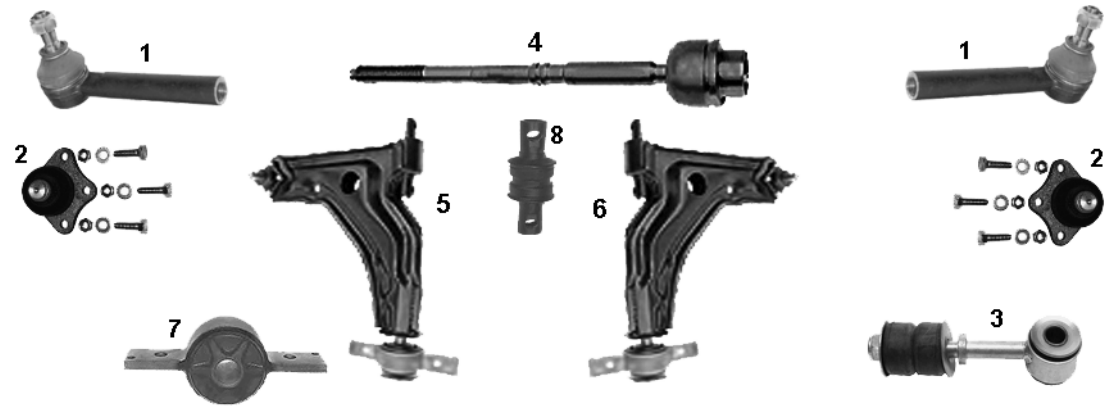

NR	MAPCO	REF			←	→	↑	↓			NEW	INFO
1	**19981**	8993453	✓		✓	✓			✓	✓		M14x1,5RHT
2	**19980**	8972135	✓		✓	✓			✓	✓		
3	**49980**	8958944	✓		✓	✓			✓	✓		
4	**49606**	8962250	✓		✓	✓			✓	✓		M14x1,5RHT 322 mm
5	**49981**	8958373	✓		✓				✓	✓		
6	**49982**	8958365	✓			✓			✓	✓		
7	**33015**	8965253	✓		✓	✓			✓	✓		
8	**33016**	8961476	✓		✓	✓			✓	✓		

SAAB 9-3 YS3D 02/98 →09/02

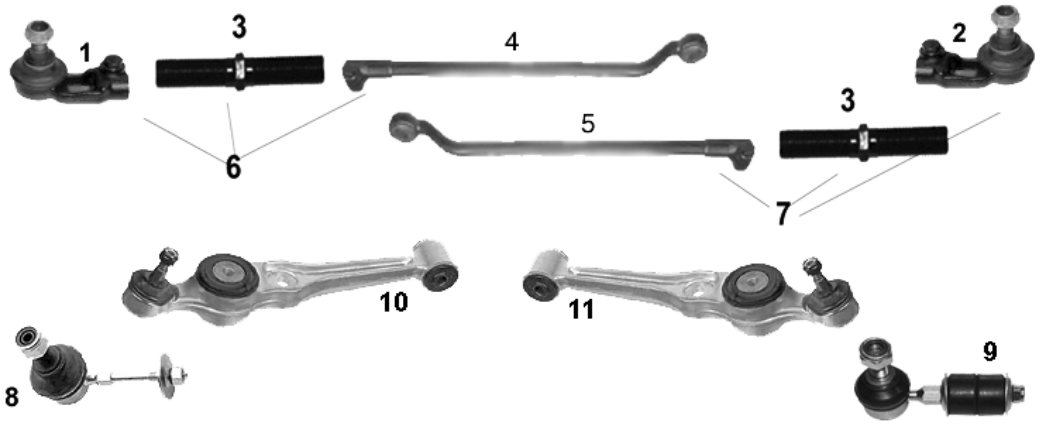

NR	MAPCO	REF			←	→	↑	↓			NEW	INFO
1	**19610**	4242749	✓		✓				✓	✓		
2	**19611**	4242756	✓			✓			✓	✓		
3	**49604**	4242731	✓		✓	✓			✓	✓		
4	**49752**	4242673	✓		✓				✓	✓		
5	**49753**	4242681	✓			✓			✓	✓		
6	**49750**	4242681S1	✓		✓				✓	✓		
7	**49751**	4242673S1	✓			✓			✓	✓		
8	**19607**	350263	✓		✓	✓			✓	✓		
9	**19607/8HPS**	350263S1	✓		✓	✓			✓	✓		
10	**19984**	454 3450	✓		✓			✓	✓	✓		
11	**19985**	454 3468	✓			✓		✓	✓	✓		

SAAB 9-3 YS3F 09/02 →

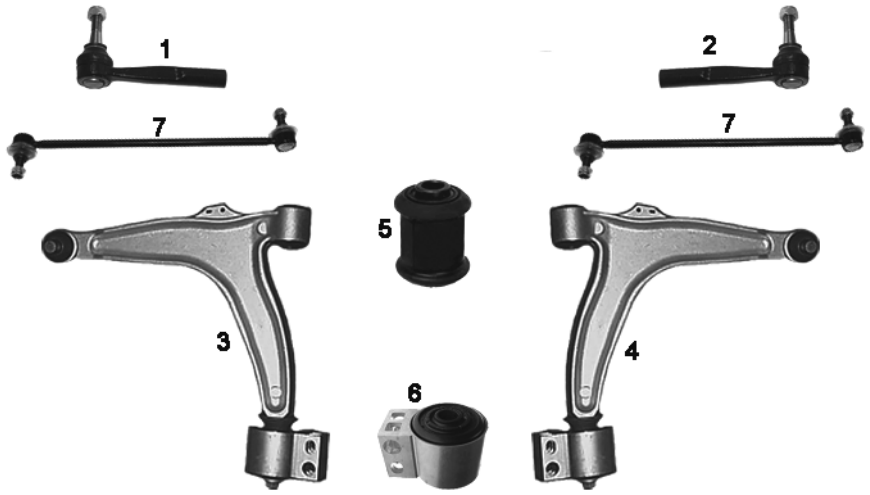

NR	MAPCO	REF								NEW	INFO
1	**49620**	5239314	✓		✓				✓	✓		M14x1,5
2	**49621**	5239322	✓			✓			✓	✓		M14x1,5
3	**49623**	352051	✓		✓				✓	✓		
4	**49624**	352052	✓			✓			✓	✓		
5	**33788**	4566899	✓		✓	✓			✓	✓		
6	**36703**	71740107	✓		✓	✓			✓	✓	✓	
7	**49749HPS**	350603	✓		✓	✓			✓	✓		

SAAB 9-5 YS3E 09/97 →

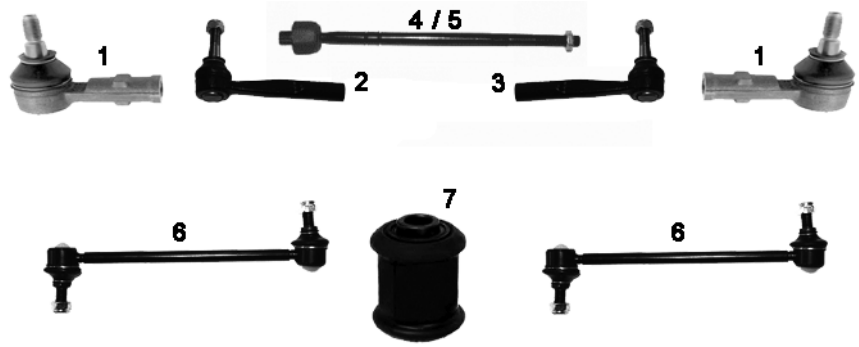

NR	MAPCO	REF								NEW	INFO
1	**19626**	4836540	✓		✓	✓			✓	✓		→10/01 M14x1,50 RHT
2	**49620**	5239314	✓		✓				✓	✓		10/01 → M14x1,5
3	**49621**	5239322	✓			✓			✓	✓		10/01 → M14x1,5
4	**19627**	4836557part	✓		✓	✓			✓	✓		→10/01 M14x1,50 RHT **SAGINAW**
5	**19628**	4836557part	✓		✓	✓			✓	✓		**ZF**
6	**19600HPS**	4686606	✓		✓	✓			✓	✓		
7	**33788**	4566899	✓		✓	✓			✓	✓		

SEAT

SEAT ALHAMBRA 04/96→

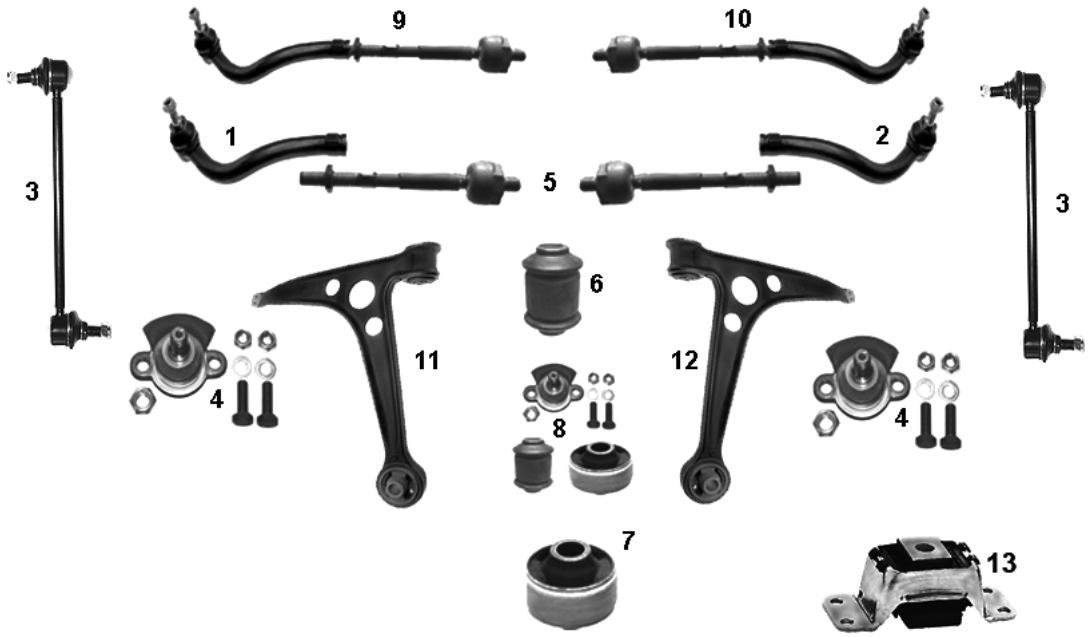

NR	MAPCO	REF			←	→	↑	↓			NEW	INFO
1	**49857**	7M0422817	✓		✓				✓	✓		M14x1,50 RHT
2	**49858**	7M0422818	✓			✓			✓	✓		M14x1,50 RHT
3	**49856HPS**	7M0411317	✓		✓	✓			✓	✓		
4	**49861**	7M0407365A	✓		✓	✓			✓	✓		
5	**49866**	7M0422803G	✓		✓	✓			✓	✓		
6	**33908**	7M0501541	✓		✓	✓			✓	✓		
7	**33928**	7M0407181A	✓		✓	✓			✓	✓		
8	**19266**		✓		✓	✓			✓	✓		Kit
9	**49866/1**	7M0422803G	✓		✓				✓	✓		
10	**49866/2**	7M0422804G	✓			✓			✓	✓		
11	**49876**	7M0407151B	✓		✓				✓	✓		
12	**49877**	7M0407152B	✓			✓			✓	✓		
13	**33864**	7M0505221C		✓	✓	✓			✓	✓		STOP 2.8

SEAT ALTEA (5P1) 03/04→

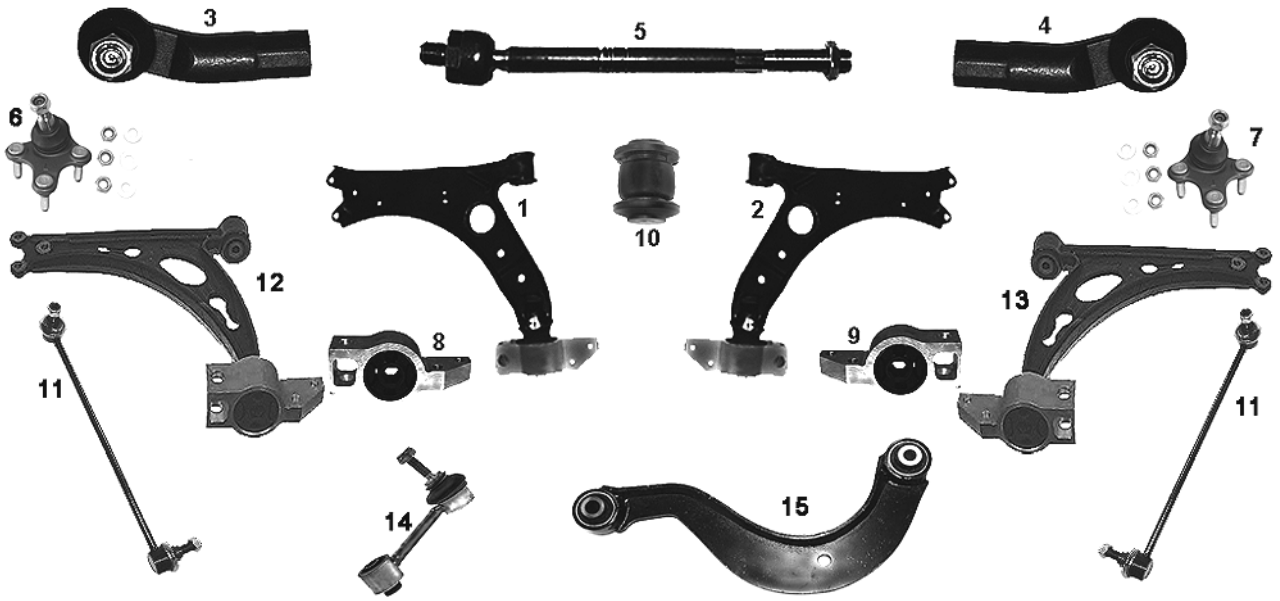

NR	MAPCO	REF								NEW	INFO
1	**51715**	1K0 407 151P	✓		✓			✓	✓	✓	
2	**51716**	1K0 407 152P	✓			✓		✓	✓	✓	
3	**51826**	1K0 423 811J	✓		✓				✓	✓	
4	**51827**	1K0 423 812J	✓			✓			✓	✓	
5	**51723**	1K0 423 810A	✓		✓	✓			✓	✓	M16x1,5RHT 310 mm
6	**51724**	1K0 407 365E	✓		✓			✓	✓	✓	**Ø 16 mm**
7	**51725**	1K0 407 366E	✓			✓		✓	✓	✓	**Ø 16 mm**
8	**36948**	1K0 199 231G	✓		✓			✓	✓	✓	
9	**36949**	1K0 199 232G	✓			✓		✓	✓	✓	
10	**36950**	1K0 407 182	✓		✓	✓		✓	✓	✓	
11	**51825HPS**	1K0 411 315D	✓		✓	✓		✓	✓	✓	
12	**51726**	1K0 407 151AC	✓		✓			✓	✓	✓	✓
13	**51727**	1K0 407 152M	✓			✓		✓	✓	✓	✓
14	**51829HPS**	1K0 505 465C		✓	✓	✓			✓	✓	
15	**52718**	1K0 505 323H		✓	✓	✓	✓		✓	✓	✓

SEAT ALTEA XL (5P5) 10/06→

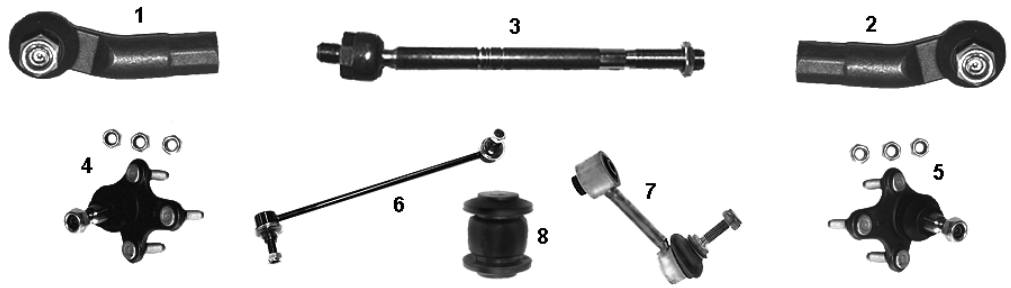

NR	MAPCO	REF								NEW	INFO
1	**51826**	1K0 423 811J	✓		✓				✓	✓	
2	**51827**	1K0 423 812J	✓			✓			✓	✓	
3	**51723**	1K0 423 810A	✓		✓	✓			✓	✓	M16x1,5RHT 310 mm
4	**51724**	1K0 407 365E	✓		✓			✓	✓	✓	Konus 16,00 mm
5	**51725**	1K0 407 366E	✓			✓		✓	✓	✓	Konus 16,00 mm
6	**51825HPS**	1K0 411 315D	✓		✓	✓		✓	✓	✓	
7	**51829HPS**	1K0 505 465C		✓	✓	✓			✓	✓	
8	**36950**	1K0 407 182	✓		✓	✓		✓	✓	✓	

SEAT AROSA 1997→

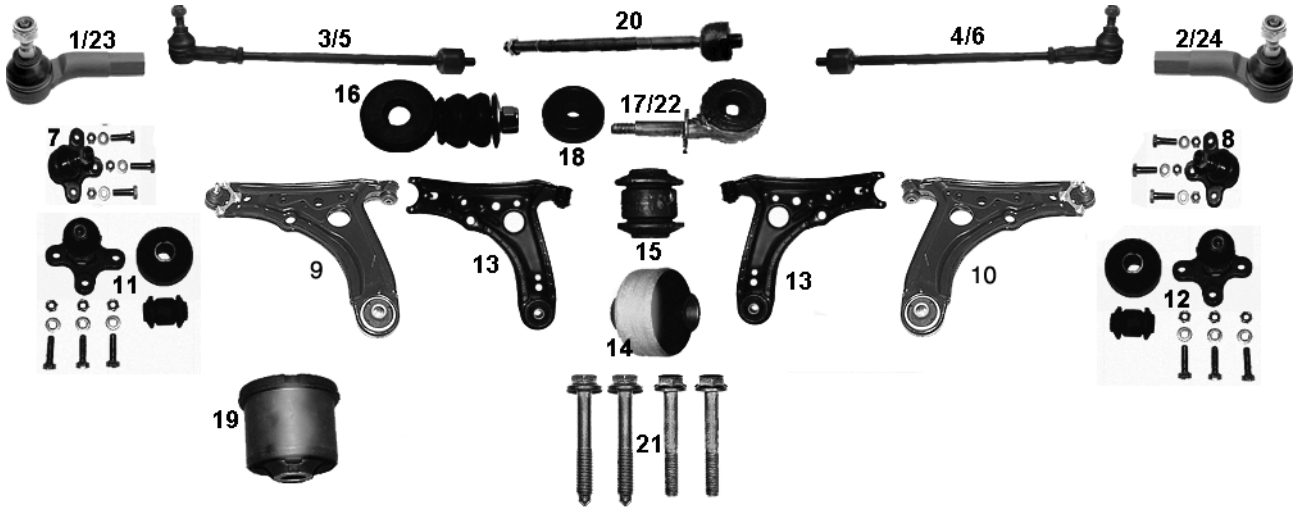

NR	MAPCO	REF								NEW	INFO
1	**19885**	6N0419811	✓		✓				✓		M14x1,50 RHT
2	**19886**	6N0419812	✓			✓			✓		M14x1,50 RHT
3	**19688**	6N0419803	✓		✓				✓		
4	**19689**	6N0419804	✓			✓			✓		
5	**19696**	6N0422803A	✓		✓				✓		
6	**19697**	6N0422804A	✓			✓			✓		
7	**19895**	6N0407365	✓		✓				✓	✓	
8	**19896**	6N0407365A	✓			✓			✓	✓	
9	**51819**	6X0407151A	✓		✓				✓	✓	**7 + 13**
10	**51820**	6X0407151A	✓			✓			✓	✓	**8 + 13**
11	**19295**		✓		✓				✓	✓	Kit
12	**19296**		✓			✓			✓	✓	Kit
13	**51819/1**	6X0407151A	✓		✓	✓			✓	✓	
14	**33835**	6N0407181	✓		✓	✓			✓	✓	Ø 17 mm
15	**33834**	6N0407182	✓		✓	✓			✓	✓	Ø 10 mm
16	**49862/1**	6N0411315	✓		✓	✓			✓	✓	**17 + 18** STOP 1.4 16V 01/00→
17	**49862**	6N0411315	✓		✓	✓			✓	✓	STOP 1.4 16V 01/00→
18	**49862/9**	191411329	✓		✓	✓			✓	✓	
19	**33937**	6N0501541D		✓	✓	✓			✓	✓	
20	**19696/1**	**6N0422821A**	✓		✓	✓			✓		M14x1,5
21	**95686**		✓		✓	✓			✓	✓	MS
22	**51821**	6N041315A	✓		✓	✓			✓	✓	✓1.4 16V 01/00-> D Innen/ inner 20,0mm
23	**51822**	6X0422811	✓		✓				✓		✓ M14x1,5 RHT
24	**51823**	6X0422812	✓			✓			✓		✓ M14x1,5 RHT

SEAT CORDOBA (6K2) 11/93→10/02

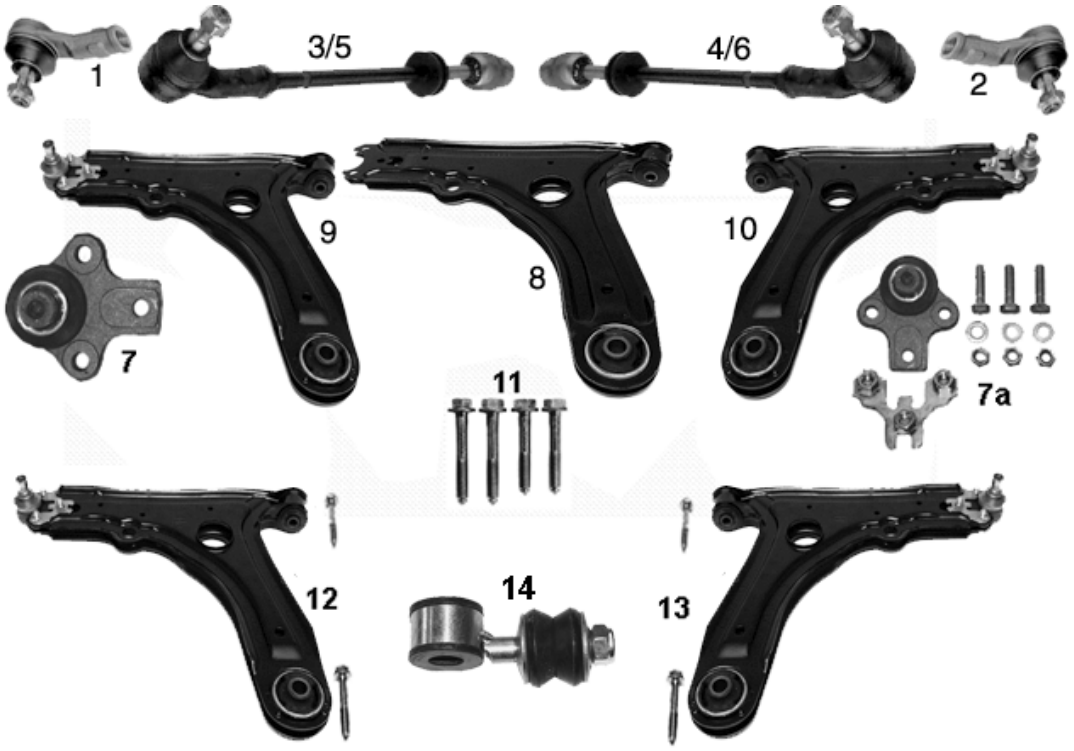

NR	MAPCO	REF								NEW	INFO
1	**19877**	191419811	✓		✓				✓	✓		M14x1,50 RHT
2	**19878**	191419812	✓			✓			✓	✓		M14x1,50 RHT
3	**19892**	191419803A	✓		✓					✓		**(+1)**
4	**19888**	191419804A	✓			✓				✓		**(+2)**
5	**19860**	191422803A	✓		✓				✓			**(+1)**
6	**19861**	191422804A	✓			✓			✓			**(+2)**
7	**19889**	357407365A	✓		✓	✓			✓	✓		**Ø 19 mm**
7a	**19889/1**	357407365A	✓		✓	✓			✓	✓		**Ø 19 mm**
8	**19858**	191407153B	✓		✓	✓			✓	✓		
9	**19858/1**		✓		✓				✓	✓		**7 + 8**
10	**19858/2**		✓			✓			✓	✓		**7 + 8**
11	**95858**		✓		✓	✓			✓	✓		MS
12	**19858/7**		✓		✓				✓	✓		**+ 7 + 8**
13	**19858/8**		✓			✓			✓	✓		**+ 7 + 8**
14	**51862**	191411315A	✓		✓	✓			✓	✓		Ø 18 mm →03/97

SEAT CORDOBA (6L2) 10/02→

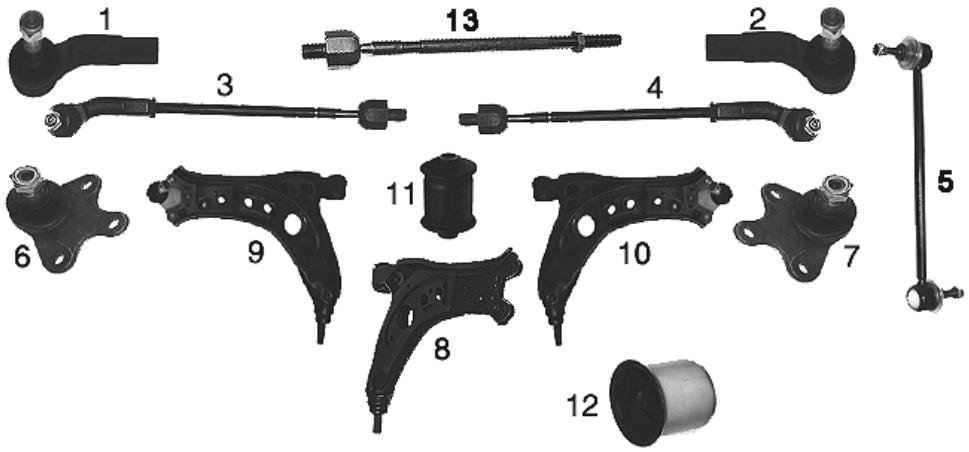

NR	MAPCO	REF			←	→	↑	↓			NEW	INFO
1	**59806**	6Q0423811	✓		✓				✓	✓		
2	**59807**	6Q0423812	✓			✓			✓	✓		
3	**59808**	6Q0423803B	✓		✓				✓	✓		**M14x1,5**
4	**59809**	6Q0423804B	✓			✓			✓	✓		**M14x1,5**
5	**59812HPS**	6Q0411315C	✓		✓	✓			✓	✓		
6	**59810**	6Q0407365A	✓		✓				✓	✓		
7	**59811**	6Q0407366A	✓			✓			✓	✓		
8	**59813**	6Q0407151D	✓		✓	✓			✓	✓		
9	**59813/1**		✓			✓			✓	✓		**6 + 8**
10	**59813/2**		✓			✓			✓	✓		**7 + 8**
11	**36938**	6Q0407182A	✓		✓	✓			✓	✓		
12	**36939**	6Q0407183	✓		✓	✓			✓	✓		
13	**59808/1**	6Q0423810C	✓		✓	✓			✓			**SMI/KOJO**

SEAT EXEO ST (3R5), EXEO (3R2) 03/09→

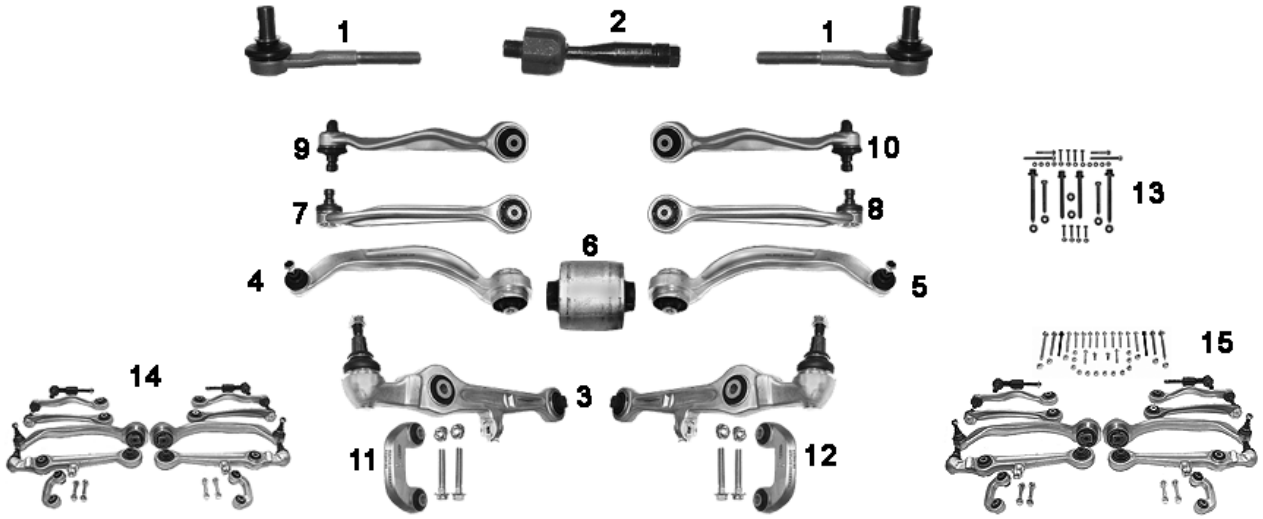

NR	MAPCO	REF			←	→	↑	↓			NEW	INFO
1	**59707OES**	4B0419811G	✓		✓	✓			✓			Metall 17,5 mm M14 x 1,5 mm
2	**49738**	4D0422821A	✓		✓	✓			✓			
3	**51710OES**	8E0407151N	✓		✓	✓			✓			vorn/ front/ avant
4	**51872**	8E0407693AA	✓		✓			✓	✓		✓	hinten/ rear/ arrière
5	**51873**	8E0407694AA	✓			✓		✓	✓		✓	hinten/ rear/ arrière
6	**36778**	4F0407183C	✓		✓	✓		✓	✓			hinten/ rear/ arrière
7	**49680OES**	8D0407505A	✓		✓		✓		✓			vorn/ front/ avant
8	**49681OES**	8D0407506A	✓			✓	✓		✓			vorn/ front/ avant
9	**49791OES**	4D0407509B	✓		✓				✓			hinten/ rear/ arrière
10	**49792OES**	4D0407510B	✓			✓			✓			hinten/ rear/ arrière
11	**52712**	8E0411317	✓		✓				✓		✓	
12	**52713**	8E0411318	✓			✓			✓		✓	
13	**95710**		✓		✓	✓			✓			MS
14	**59827**	8E0498998	✓		✓	✓			✓			
15	**59827/1**	8E0498998	✓		✓	✓			✓			+ MS

SEAT IBIZA I 06/84→ 12/93

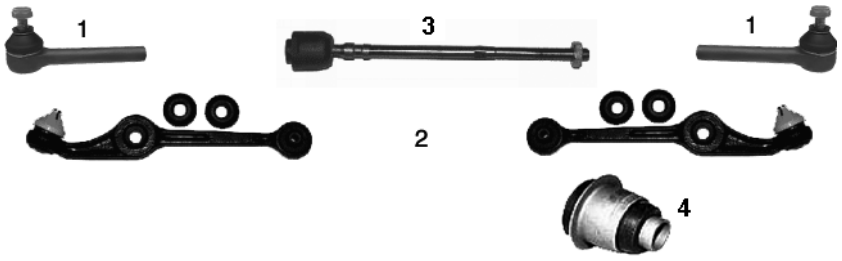

NR	MAPCO	REF			←	→	↑	↓			NEW	INFO
1	**19042**	SE022162406A	✓		✓	✓				✓		M12x1,5RHT
2	**19064**	SE021156110B	✓		✓	✓				✓		Ø 17 mm
3	**19043**	SE022162449A	✓		✓	✓				✓		
4	**33004**	138156532A		✓	✓	✓				✓		

SEAT IBIZA II + III

03/93→02/02

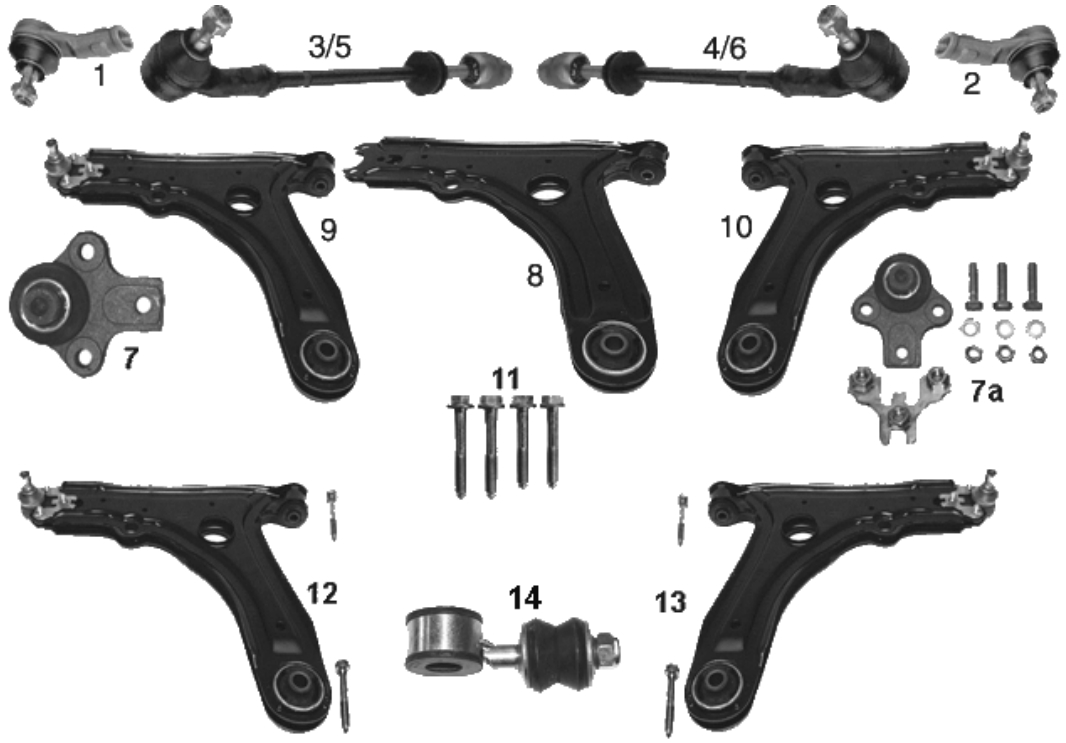

NR	MAPCO	REF								NEW	INFO
1	**19877**	191419811	✓		✓				✓	✓		M14x1,50 RHT
2	**19878**	191419812	✓			✓			✓	✓		M14x1,50 RHT
3	**19892**	191419803A	✓		✓					✓		**(+1)**
4	**19888**	191419804A	✓			✓				✓		**(+2)**
5	**19860**	191422803A	✓		✓				✓			**(+1)**
6	**19861**	191422804A	✓			✓			✓			**(+2)**
7	**19889**	357407365A	✓		✓	✓			✓	✓		**Ø 19 mm**
7a	**19889/1**	357407365A	✓		✓	✓			✓	✓		**Ø 19 mm**
8	**19858**	191407153B	✓		✓	✓			✓	✓		
9	**19858/1**		✓		✓				✓	✓		**7 + 8**
10	**19858/2**		✓			✓			✓	✓		**7 + 8**
11	**95858**		✓		✓	✓			✓	✓		MS
12	**19858/7**		✓		✓				✓	✓		**+ 7 + 8**
13	**19858/8**		✓			✓			✓	✓		**+ 7 + 8**
14	**51862**	191411315A	✓		✓	✓			✓	✓	✓	Ø 18 mm →03/97

SEAT IBIZA IV (6L1) 02/02→

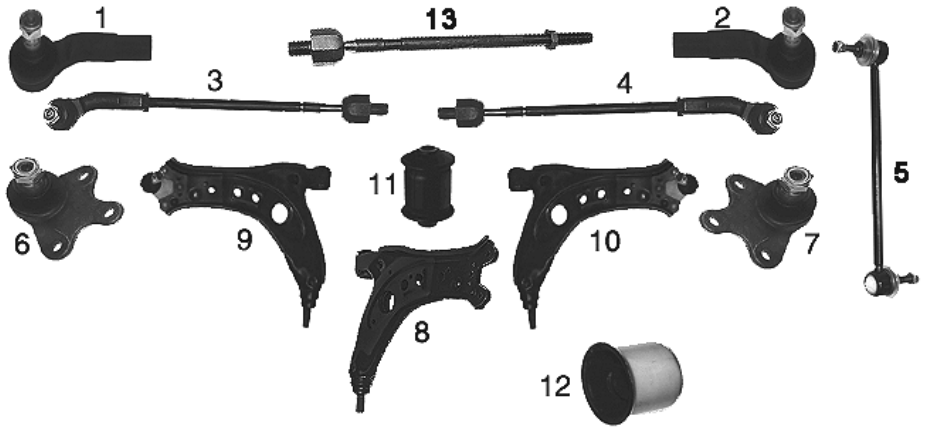

NR	MAPCO	REF			←	→	↑	↓			NEW	INFO
1	**59806**	6Q0423811	✓		✓				✓	✓		
2	**59807**	6Q0423812	✓			✓			✓	✓		
3	**59808**	6Q0423803B	✓		✓				✓	✓		**M14x1,5**
4	**59809**	6Q0423804B	✓			✓			✓	✓		**M14x1,5**
5	**59812HPS**	6Q0411315C	✓		✓	✓			✓	✓		
6	**59810**	6Q0407365A	✓		✓				✓	✓		
7	**59811**	6Q0407366A	✓			✓			✓	✓		
8	**59813**	6Q0407151D	✓		✓	✓			✓	✓		
9	**59813/1**		✓			✓			✓	✓		**6 + 8**
10	**59813/2**		✓			✓			✓	✓		**7 + 8**
11	**36938**	6Q0407182A	✓		✓	✓			✓	✓		
12	**36939**	6Q0407183	✓		✓	✓			✓	✓		
13	**59808/1**	6Q0423810C	✓		✓	✓			✓			**SMI/ KOJO**

SEAT LEON (1M1) 11/99→

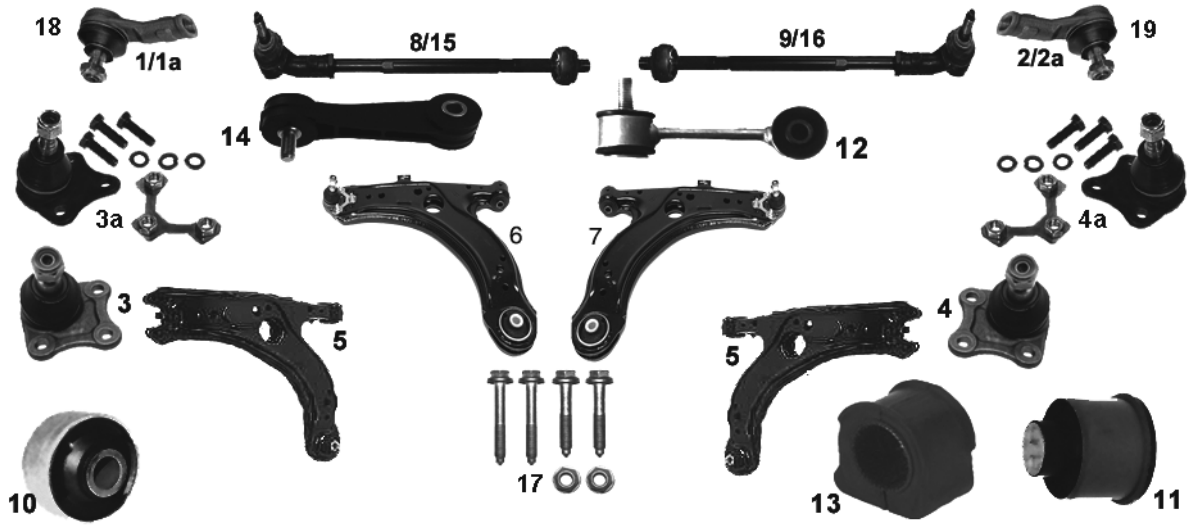

NR	MAPCO	REF								NEW	INFO
1	49700	1J0 422 811B	✓		✓				✓	✓	94mm M14x1,5RHT, Chassis 8L-W-050422 →
1a	59895	1J0 422 811A	✓		✓				✓	✓	75mm M14x1,5RHT, Chassis → 8L-W-050421
2	49701	1J0 422 812B	✓			✓			✓	✓	94mm M14x1,5RHT, Chassis 8L-W-050422 →
2a	59896	1J0 422 812A	✓			✓			✓	✓	75mm M14x1,5RHT, Chassis → 8L-W-050421
3	49702	1J0 407 365C	✓		✓				✓	✓	
3a	49702/1	1J0 407 365A	✓		✓				✓	✓	
4	49703	1J0 407 366C	✓			✓			✓	✓	
4a	49703/1	1J0 407 366A	✓			✓			✓	✓	
5	49704	1J0 407 151B	✓		✓	✓			✓	✓	
6	49704/1		✓		✓				✓	✓	**5+3a** Chassis 8L-W-050422→
7	49704/2		✓			✓			✓	✓	**5+4a** Chassis 8L-W-050422→
8	49690	1J0 422 803B	✓		✓				✓	✓	Chassis 8L-W-050422→
9	49691	1J0 422 804B	✓			✓			✓	✓	Chassis 8L-W-050422→
10	33903	1J0 407 181	✓		✓	✓			✓	✓	
11	33912	1J0 501 541C		✓	✓	✓			✓	✓	
12	49867	1J0 411 315C	✓		✓	✓			✓	✓	Stahl/steel 105mm, Ø 23mm
13	33927	1J0 411 314B	✓		✓	✓			✓	✓	Innen Ø 19mm
14	49868	1J0 411 315C	✓		✓	✓			✓	✓	Plastik 105mm Ø 21mm
15	49869	1J0 422 803A	✓		✓				✓	✓	Chassis → 8L-W-050421
16	49870	1J0 422 804A	✓			✓			✓	✓	Chassis → 8L-W-050421
17	95704		✓		✓	✓			✓	✓	MS
18	51711	8N0 422 811A	✓		✓				✓		✓ 16x1,5RHT✓ 1.8T
19	51712	8N0 422 812A	✓			✓			✓		✓ 16x1,5RHT✓ 1.8T

SEAT LEON (1P1) 09/05→

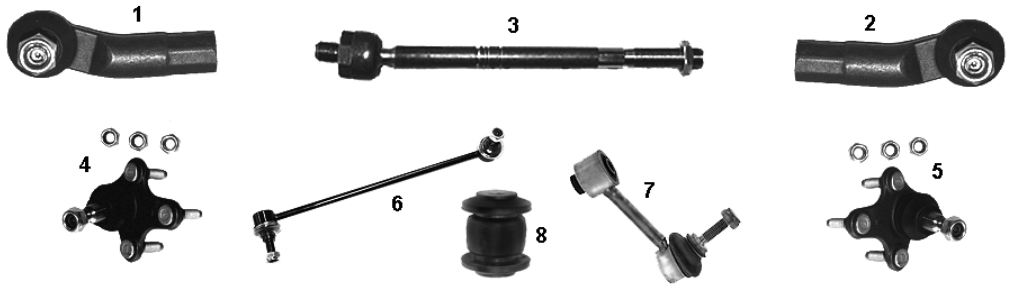

NR	MAPCO	REF								NEW	INFO
1	51826	1K0 423 811J	✓		✓				✓	✓	
2	51827	1K0 423 812J	✓			✓			✓	✓	
3	51723	1K0 423 810A	✓		✓	✓			✓	✓	M16x1,5RHT 310 mm
4	51724	1K0 407 365E	✓		✓			✓	✓	✓	Konus 16,00 mm
5	51725	1K0 407 366E	✓			✓		✓	✓	✓	Konus 16,00 mm
6	51825HPS	1K0 411 315D	✓		✓	✓		✓	✓	✓	
7	51829HPS	1K0 505 465C		✓	✓	✓			✓	✓	
8	36950	1K0 407 182	✓		✓	✓		✓	✓	✓	

SEAT MALAGA 06/84→12/93

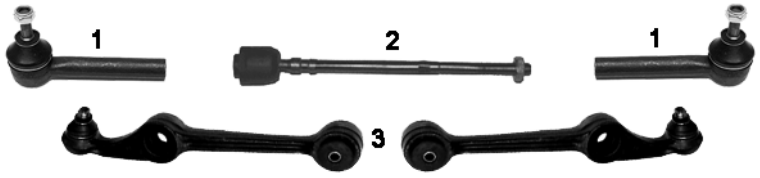

NR	MAPCO	REF								NEW	INFO
1	19042	SE022162406A	✓		✓	✓				✓	M12x1,5RHT
2	19043	SE022162449B	✓		✓	✓				✓	
3	19064	SE021156110B	✓		✓	✓				✓	KONUS Ø 17 mm

SEAT MARBELLA 08/86→10/98

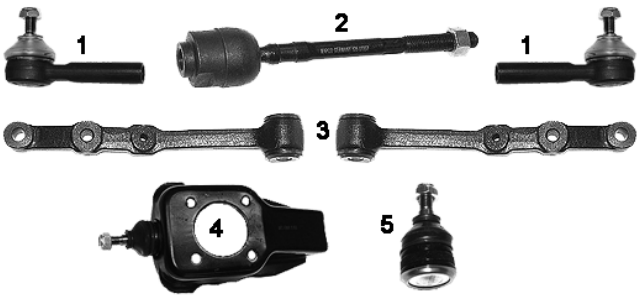

NR	MAPCO	REF								NEW	INFO
1	19046	SE141162410A	✓		✓	✓				✓	10/82→ M12x1,5RHT
2	19452	SE141162449	✓		✓	✓				✓	M12x1,5RH
3	19045	SE141156110A	✓		✓	✓				✓	
4	19048	SE141140104A	✓		✓	✓				✓	
5	19044	SE141140104A	✓		✓	✓				✓	

SEAT RONDA (022A) 06/82→11/88



NR	MAPCO	REF								NEW	INFO
1	**19042**	SE022162406A	✓		✓	✓				✓		M12x1,5RHT 06/84→
2	**19043**	SE022162449A	✓		✓	✓				✓		

SEAT TOLEDO I 03/91→ 03/99

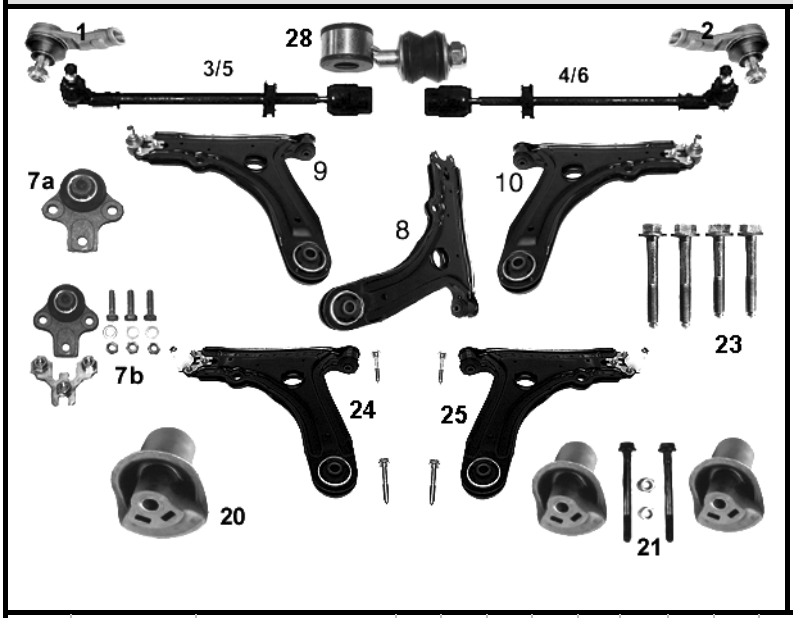

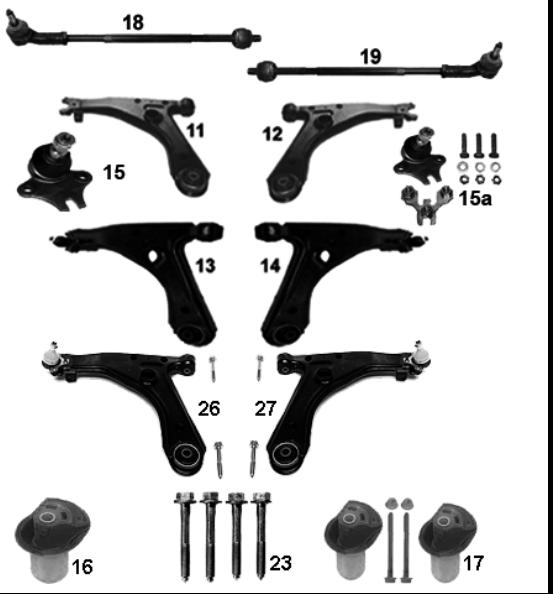

NR	MAPCO	REF								NEW	INFO
1	**19877**	191419811	✓		✓				✓	✓		M14x1,5RHT
2	**19878**	191419812	✓			✓			✓	✓		M14x1,5RHT
3	**19892**	191419803A	✓		✓					✓		**(+1)**
4	**19888**	191419804A	✓			✓				✓		**(+2)**
5	**19860**	191422803A	✓		✓				✓			**(+1)**
6	**19861**	191422804A	✓			✓			✓			**(+2)**
7a	**19889**	357407365A	✓		✓	✓			✓	✓		**Ø 19 mm**
7b	**19889/1**	357407365A	✓		✓	✓			✓	✓		**Ø 19 mm**
8	**19858**	191407153B	✓		✓	✓			✓	✓		
9	**19858/1**		✓		✓				✓	✓		**7b+8**
10	**19858/2**		✓			✓			✓	✓		**7b+8**
20	**33833**	191501541		✓	✓	✓			✓	✓		
21	**33833/2**	191501541S		✓	✓	✓			✓	✓		
22	**95858**		✓		✓	✓			✓	✓	✓	MS
24	**19858/7**		✓		✓				✓	✓	✓	+
25	**19858/8**		✓			✓			✓	✓	✓	+
28	**51862**	191411315A	✓		✓	✓			✓	✓	✓	Ø 18 mm →03/97
11	**49664**	1H0407151A	✓		✓				✓	✓		**✓2.0i 16V**
12	**49665**	1H0407152	✓			✓			✓	✓		**✓2.0i 16V**
13	**49666**		✓		✓				✓	✓		**11 + 15a✓2.0i 16V**
14	**49667**		✓			✓			✓	✓		**12 + 15a✓2.0i 16V**
15	**19679**	1H0407365	✓		✓	✓			✓	✓		**Ø 16,5 mm ✓2.0i 16V**
15a	**19679/1**	1H0407365S	✓		✓	✓			✓	✓		**Ø 16,5 mm ✓2.0i 16V**
16	**33858**	1H10501541A		✓	✓	✓			✓	✓		**✓2.0i 16V**
17	**33858/2**	1H0501541S		✓	✓	✓			✓	✓		**✓2.0i 16V**
18	**49873**	1H0422803A	✓		✓				✓	✓		**✓2.0i 16V**
19	**49874**	1H0422804A	✓			✓			✓	✓		**✓2.0i 16V**
23	**95870**		✓		✓	✓			✓	✓	✓	MS **✓2.0i 16V**
26	**49666/7**		✓		✓				✓	✓	✓	+ **11 + 15a✓2.0i 16V**
27	**49667/7**		✓			✓			✓	✓	✓	+ **12 + 15a✓2.0i 16V**

SEAT TOLEDO II 04/99→

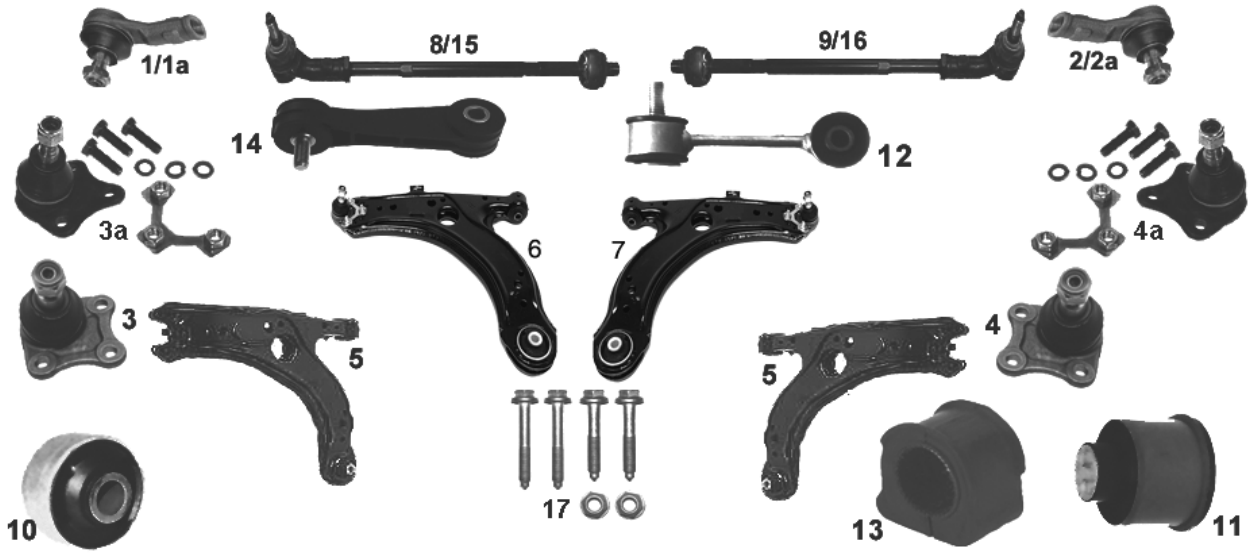

NR	MAPCO	REF								NEW	INFO
1	49700	1J0 422 811B	✓		✓				✓	✓	94mm M14x1,5RHT, Chassis 8L-W-050422 →
1a	59895	1J0 422 811A	✓		✓				✓	✓	75mm M14x1,5RHT, Chassis → 8L-W-050421
2	49701	1J0 422 812B	✓			✓			✓	✓	94mm M14x1,5RHT, Chassis 8L-W-050422 →
2a	59896	1J0 422 812A	✓			✓			✓	✓	94mm M14x1,5RHT, Chassis → 8L-W-050421
3	49702	1J0 407 365C	✓		✓				✓	✓	
3a	49702/1	1J0 407 365A	✓		✓				✓	✓	
4	49703	1J0 407 366C	✓			✓			✓	✓	
4a	49703/1	1J0 407 366A	✓			✓			✓	✓	
5	49704	1J0 407 151B	✓		✓	✓			✓	✓	
6	49704/1		✓		✓				✓	✓	**5+3a** Chassis 8L-W-050422→
7	49704/2		✓			✓			✓	✓	**5+4a** Chassis 8L-W-050422→
8	49690	1J0 422 803B	✓		✓				✓	✓	Chassis 8L-W-050422→
9	49691	1J0 422 804B	✓			✓			✓	✓	Chassis 8L-W-050422→
10	33903	1J0 407 181	✓		✓	✓			✓	✓	
11	33912	1J0 501 541C		✓	✓	✓			✓	✓	
12	49867	1J0 411 315C	✓		✓	✓			✓	✓	Stahl/steel 105mm, Ø 23mm
13	33927	1J0 411 314B	✓		✓	✓			✓	✓	innen/inner Ø 19mm
13a	33824	1J0 411 314G	✓		✓	✓			✓	✓	innen/inner Ø 23mm
14	49868	1J0 411 315C	✓		✓	✓			✓	✓	Plastik 105mm Ø 21mm
15	49869	1J0 422 803A	✓		✓				✓	✓	Chassis → 8L-W-050421
16	49870	1J0 422 804A	✓			✓			✓	✓	Chassis → 8L-W-050421
17	95704		✓		✓	✓			✓	✓	MS

SEAT TOLEDO III 09/04→

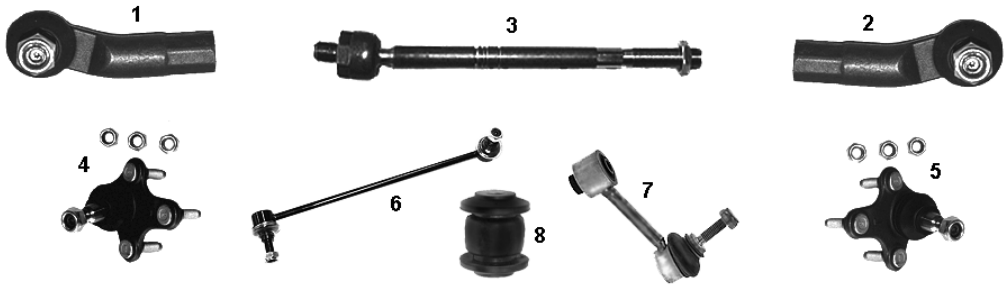

NR	MAPCO	REF			←	→	↑	↓			NEW	INFO
1	**51826**	1K0 423 811J	✓		✓				✓	✓		
2	**51827**	1K0 423 812J	✓			✓			✓	✓		
3	**51723**	1K0 423 810A	✓		✓	✓			✓	✓		M16x1,5RHT 310 mm
4	**51724**	1K0 407 365E	✓		✓			✓	✓	✓		Konus 16,00 mm
5	**51725**	1K0 407 366E	✓			✓		✓	✓	✓		Konus 16,00 mm
6	**51825HPS**	1K0 411 315D	✓		✓	✓		✓	✓	✓		
7	**51829HPS**	1K0 505 465C		✓	✓	✓			✓	✓		
8	**36950**	1K0 407 182	✓		✓	✓		✓	✓	✓		

SKODA

SKODA FABIA 08/99→

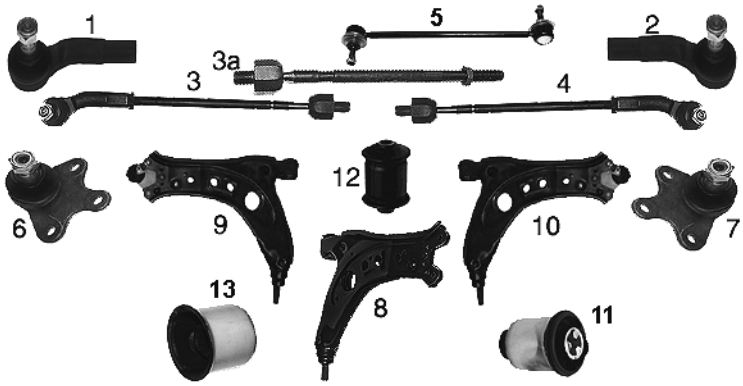

NR	MAPCO	REF			←	→	↑	↓			NEW	INFO
1	**59806**	6Q0423811	✓		✓				✓	✓		
2	**59807**	6Q0423812	✓			✓			✓	✓		
3	**59808**	6Q0423803B	✓		✓				✓	✓		**M14x1,5**
3a	**59808/1**	6Q0423810C	✓		✓	✓			✓	✓		**SMI/ KOJO**
4	**59809**	6Q0423804B	✓			✓			✓	✓		**M14x1,5**
5	**59812HPS**	6Q0411315C	✓		✓	✓			✓	✓		
6	**59810**	6Q0407365A	✓		✓				✓	✓		
7	**59811**	6Q0407366A	✓			✓			✓	✓		
8	**59813**	6Q0407151D	✓		✓	✓			✓	✓		
9	**59813/1**		✓			✓			✓	✓		**6 + 8**
10	**59813/2**		✓			✓			✓	✓		**7 + 8**
11	**33912**	1J0501541C		✓	✓	✓			✓	✓		
12	**36938**	6Q0407182A	✓		✓	✓			✓	✓	✓	
13	**36939**	6Q0407183	✓		✓	✓			✓	✓	✓	

SKODA FAVORIT 1984→09/94



NR	MAPCO	REF								NEW	INFO
1	**19961**	115500440	✓		✓	✓				✓		M12 x 1,0 RHT
2	**19962**	115420240	✓		✓	✓				✓		
3	**19993**	6U0407182	✓		✓	✓				✓		
4	**19994**	115422291	✓		✓	✓				✓		
5	**33950**	115422292	✓		✓	✓				✓		**Ø 26,0 mm**
6	**33954**	115590801	✓		✓	✓				✓		
7	**33955**	115590802	✓		✓	✓				✓		

SKODA FELICIA 1994→06/01

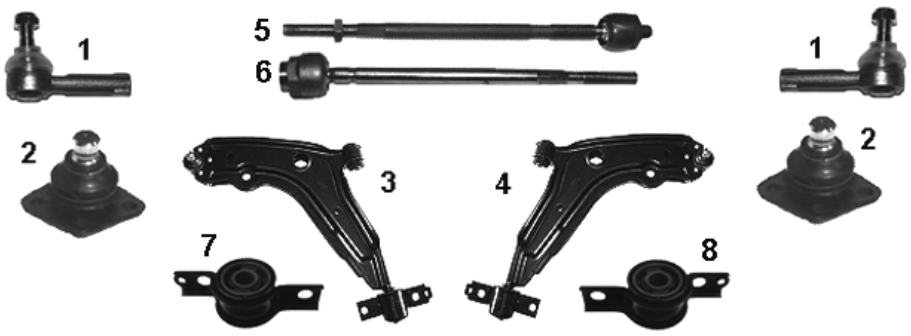

NR	MAPCO	REF								NEW	INFO
1	**19961**	115 500 440	✓		✓	✓			✓	✓		M12 x 1,0 RHT
2	**19962**	115 420 240	✓		✓	✓			✓	✓		
3	**19971**	6U0 407 151	✓		✓				✓	✓		
4	**19972**	6U0 407 152	✓			✓			✓	✓		
5	**19973**	6U0 422 807	✓		✓	✓			✓		✓	
6	**19968**	007 350 278N	✓		✓	✓				✓		
7	**36780**	6U6 407 359A	✓		✓				✓	✓		
8	**36781**	6U6 407 360A	✓			✓			✓	✓		

SKODA OCTAVIA (1U_) 1997→

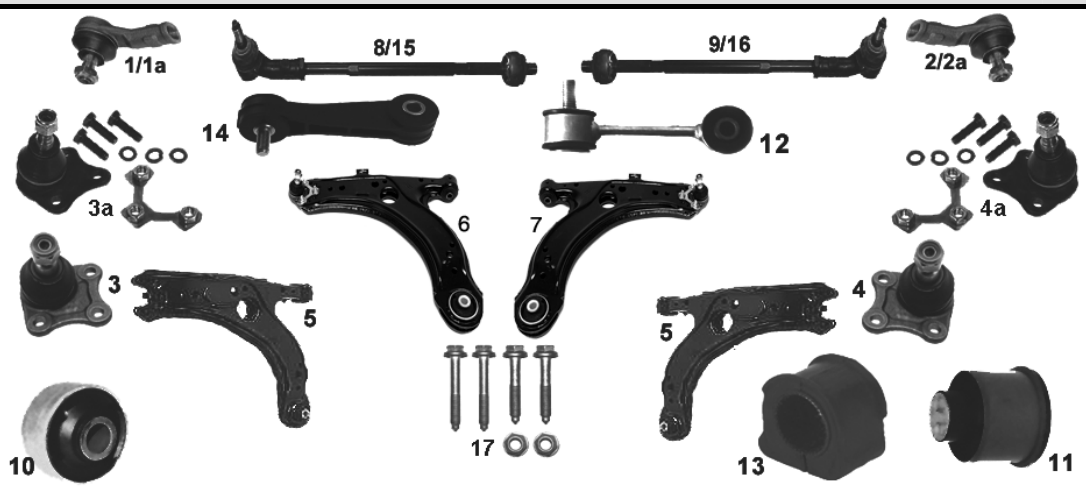

NR	MAPCO	REF								NEW	INFO
1	49700	1J0 422 811B	✓		✓				✓	✓	94mm M14x1,5RHT, Chassis 1U-W-061001→
1a	59895	1J0 422 811A	✓		✓				✓	✓	75mm M14x1,5RHT, Chassis → 1U-W-061000
2	49701	1J0 422 812B	✓			✓			✓	✓	94mm M14x1,5RHT, Chassis 1U-W-061001→
2a	59896	1J0 422 812A	✓			✓			✓	✓	75mm M14x1,5RHT, Chassis → 1U-W-061000
3	49702	1J0 407 365C	✓		✓				✓	✓	
3a	49702/1	1J0 407 365A	✓		✓				✓	✓	
4	49703	1J0 407 366C	✓			✓			✓	✓	
4a	49703/1	1J0 407 366A	✓			✓			✓	✓	
5	49704	1J0 407 151B	✓		✓	✓			✓	✓	
6	49704/1		✓		✓				✓	✓	**5+3a**
7	49704/2		✓			✓			✓	✓	**5+4a**
8	49690	1J0 422 803B	✓		✓				✓	✓	Chassis 1U-W-061001→
9	49691	1J0 422 804B	✓			✓			✓	✓	Chassis 1U-W-061001→
10	33903	1J0 407 181	✓		✓	✓			✓	✓	
11	33912	1J0 501 541C		✓	✓	✓			✓	✓	
12	49867	1J0 411 315C	✓		✓	✓			✓	✓	Stahl/steel 105mm, Ø 23mm
13	33927	1J0 411 314B	✓		✓	✓			✓	✓	Innen Ø 19mm
14	49868	1J0 411 315C	✓		✓	✓			✓	✓	Plastik 105mm Ø 21mm
15	49869	1J0 422 803A	✓		✓				✓	✓	Chassis →1U-W-061000
16	49870	1J0 422 804A	✓			✓			✓	✓	Chassis →1U-W-061000
17	95704		✓		✓	✓			✓	✓	MS

SKODA OCTAVIA (1Z_) 06/04→

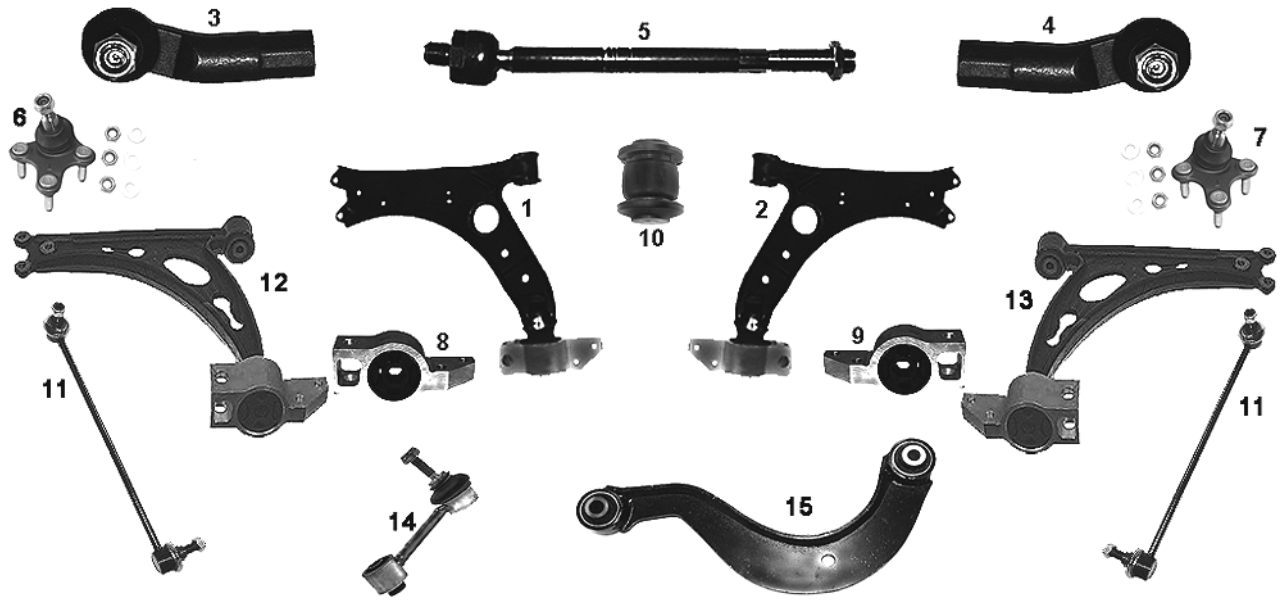

NR	MAPCO	REF								NEW	INFO
1	**51715**	1K0 407 151P	✓		✓			✓	✓	✓		
2	**51716**	1K0 407 152P	✓			✓		✓	✓	✓		
3	**51826**	1K0 423 811J	✓		✓				✓	✓		
4	**51827**	1K0 423 812J	✓			✓			✓	✓		
5	**51723**	1K0 423 810A	✓		✓	✓			✓	✓		M16x1,5RHT 310 mm
6	**51724**	1K0 407 365E	✓		✓			✓	✓	✓		**Ø 16 mm**
7	**51725**	1K0 407 366E	✓			✓		✓	✓	✓		**Ø 16 mm**
8	**36948**	1K0 199 231G	✓		✓			✓	✓	✓		
9	**36949**	1K0 199 232G	✓			✓		✓	✓	✓		
10	**36950**	1K0 407 182	✓		✓	✓		✓	✓	✓		
11	**51825HPS**	1K0 411 315D	✓		✓	✓		✓	✓	✓		
12	**51726**	1K0 407 151AC	✓		✓			✓	✓	✓	✓	
13	**51727**	1K0 407 152M	✓			✓		✓	✓	✓	✓	
14	**51829HPS**	1K0 505 465C		✓	✓	✓			✓	✓		
15	**52718**	1K0 505 323H		✓	✓	✓	✓		✓	✓	✓	

SKODA SUPERB 02/02→

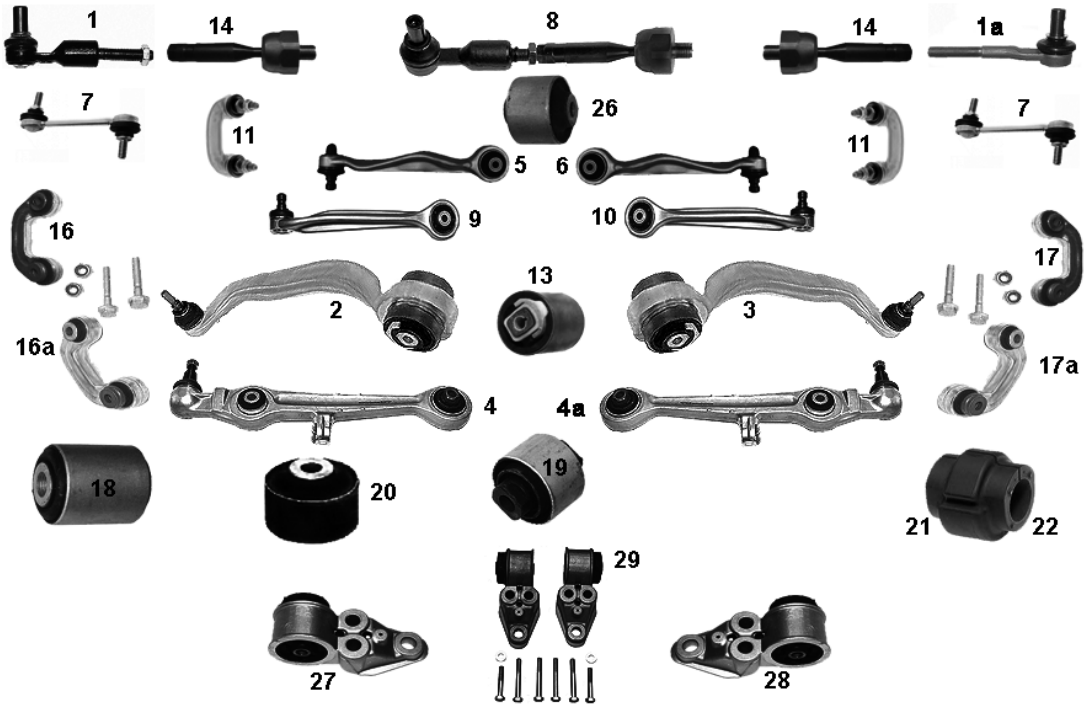

NR	MAPCO	REF								NEW	INFO
1	**49707HPS**	4D0419811B	✓		✓	✓			✓	✓		Ch. →3U-3-021-397
1a	**59707OES**	4B0419811D	✓		✓	✓			✓	✓		Ch. →3U-7A-300-774
2	**49708OES**	4D0407693N	✓		✓			✓	✓	✓		hinten/ rear/ arrière
3	**49709OES**	4D0407694N	✓			✓		✓	✓	✓		hinten/ rear/ arrière
4	**49710OES**	4D0407151P	✓		✓	✓			✓	✓		Ch. →3U-3-021-397
4a	**51730**	4B3407151K	✓		✓	✓			✓	✓	✓	Ch. →3U-6A-300-290
5	**49791OES**	4D0407509D	✓		✓		✓		✓	✓		hinten/ rear/ arrière
6	**49792OES**	4D0407510D	✓			✓	✓		✓	✓		hinten/ rear/ arrière
7	**49714**	4D0505465D	✓		✓	✓			✓	✓		Ch. →3U-3-021-397
8	**49732**	4D0419801B	✓		✓	✓			✓	✓		
9	**49680OES**	8D0407505F	✓		✓		✓		✓	✓		vorn/ front/ avant
10	**49681OES**	8D0407506F	✓			✓	✓		✓	✓		vorn/ front/ avant
11	**49682**	4D0411317J	✓		✓	✓		✓	✓	✓		
13	**33932**	4D0407183M	✓		✓	✓		✓	✓	✓		
14	**49738**	4D0422821A	✓		✓	✓			✓	✓		
16	**49683OES**	8D0411317D	✓		✓			✓	✓	✓		
16a	**49683/1OES**	8D0411317D	✓		✓			✓	✓	✓		+
17	**49684OES**	8D0411318D	✓			✓		✓	✓	✓		
17a	**49684/1OES**	8D0411318D	✓			✓		✓	✓	✓		+
18	**33839**	4D0407181H	✓		✓	✓			✓	✓		
19	**33840**	4D0407182E	✓		✓	✓			✓	✓		
20	**33876**	4D0407515D	✓		✓	✓			✓	✓		
21	**33939**	4D0411327E	✓		✓	✓			✓	✓		STOP
22	**33940**	4D0411327F	✓		✓	✓			✓	✓		✓
26	**36915**	4B0407515	✓		✓	✓	✓		✓	✓		vorn/ front/ avant
27	**36775**	4B0501521D		✓	✓				✓	✓		
28	**36776**	4B0501522D		✓		✓			✓	✓		
29	**36782**			✓	✓	✓			✓	✓		

Fortsetzung / continued

SKODA SUPERB — Fortsetzung / continued — 02/02→



23 / 26



23a / 27



23b



24



25



24a

NR	MAPCO	REF			←	→	↑	↓		NEW	INFO
23	59818HPS	4D0498998C	✓		✓	✓			✓	✓	Ch. →3U-3-021-397
23a	59818/1HPS	4D0498998C	✓		✓	✓			✓	✓	Ch. →3U-3-021-397 + MS
23b	59818/2	4D0498998C	✓		✓	✓			✓	✓	Ch. →3U-3-021-397 + MS
24	59819	8D0498998	✓		✓	✓			✓	✓	Ch. →3U-3-021-397
24a	59819/1	8D0498998	✓		✓	✓			✓	✓	Ch. →3U-3-021-397 + MS
25	95710		✓		✓	✓			✓	✓	MS
26	59826	4B3498998	✓		✓	✓			✓	✓	Ch. →3U-6A-300-290
27	59826/1	4B3498998	✓		✓	✓			✓	✓	Ch. →3U-6A-300-290 + MS

SMART

SMART (MCC) CITY-COUPE — 07/98→01/04
CABRIO — 03/00→01/04

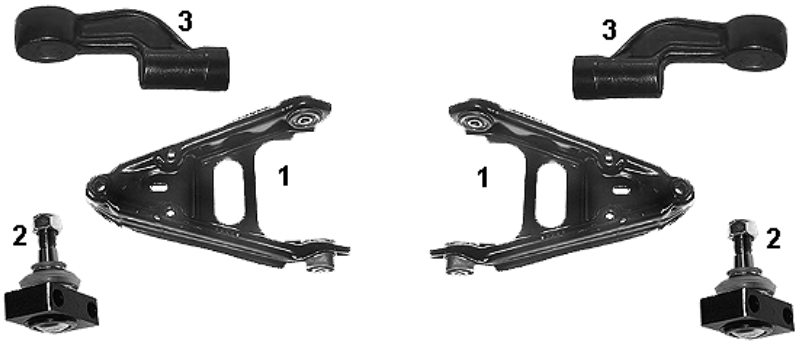

NR	MAPCO	REF			←	→	↑	↓		NEW	INFO
1	59900	7001V006000000	✓		✓	✓			✓	✓	
2	59902	0015642V001	✓		✓	✓			✓	✓	✓
3	59903	4887V006000000	✓		✓	✓			✓	✓	✓

SMART (MCC) FORTWO CABRIO/ COUPE 01/04→



NR	MAPCO	REF									INFO
1	**59901HPS**	5102V005	✓		✓	✓			✓	✓	
2	**59902**	0015642V001	✓		✓	✓			✓	✓	
3	**59903**	4887V006000	✓		✓	✓			✓	✓	
4	**59904**	0001802V004		✓	✓	✓			✓	✓	

SUBARU

SUBARU IMPREZA 08/92 →

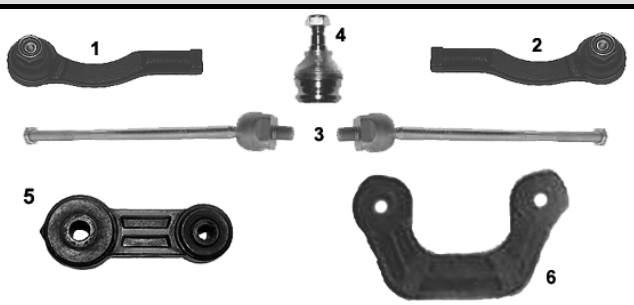

NR	MAPCO	REF									INFO
1	**49557**	31320-GA200	✓		✓	✓			✓	✓	M14 x 1,5 RHT
2	**49558**	31320-GA190	✓		✓				✓	✓	M14 x 1,5 RHT
3	**59364**	34140-AA 040	✓			✓			✓	✓	290mm M14 x 1,5 RHT
4	**49560**	21067-GA050	✓		✓	✓			✓	✓	
5	**59597**	20420-AA004	✓		✓	✓			✓	✓	
6	**59596**	20481-AA001		✓	✓	✓			✓	✓	

SUBARU JUSTY 11/84→ 04/95

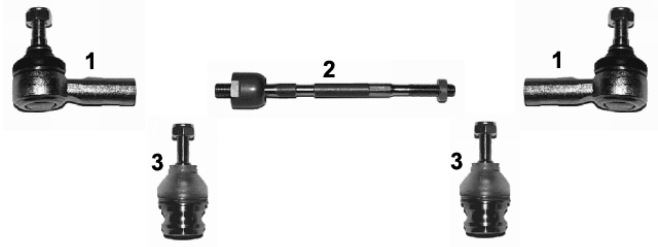

NR	MAPCO	REF									INFO
1	**49554**	7313-20020	✓		✓	✓			✓	✓	M12 x 1,25 RHT
2	**49555**	7313-10140	✓		✓	✓			✓	✓	M12 x 1,25 RHT
3	**49556**	7210-67020	✓		✓	✓			✓	✓	

SUBARU LEGACY I (BC) — 1989 → 07/94
SUBARU LEGACY II (BD,BG) — 09/94→ 03/99

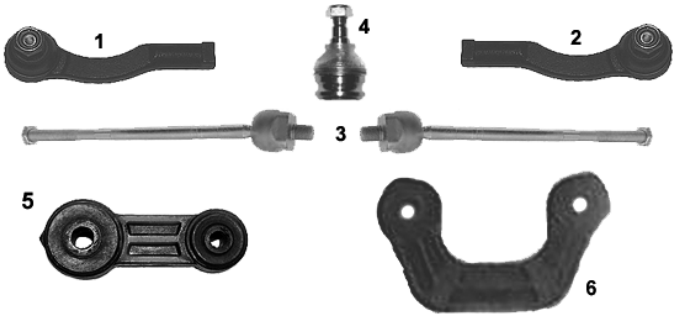

NR	MAPCO	REF			←	→	↑	↓			NEW	INFO
1	**49557**	31320-GA200	✓		✓	✓			✓	✓		M14 x 1,5 RHT
2	**49558**	31320-GA190	✓		✓				✓	✓		M14 x 1,5 RHT
3	**59364**	34140-AA 040	✓			✓			✓	✓		290mm M14 x 1,5 RHT
4	**49560**	21067-GA050	✓		✓	✓			✓	✓		
5	**59595**	20420-AA003	✓		✓	✓			✓	✓		
6	**59596**	20481-AA001		✓	✓	✓			✓	✓		

SUBARU LEONE I + II — 03/79 → 07/91

NR	MAPCO	REF			←	→	↑	↓			NEW	INFO
1	**59297**	7210-67000	✓		✓	✓			✓	✓		

SUBARU 1800 XT COUPE — 11/84→12/90

NR	MAPCO	REF			←	→	↑	↓			NEW	INFO
1	**59297**	7210-67000	✓		✓	✓			✓	✓		

SUZUKI

SUZUKI ALTO I — 06/82 → 12/85

NR	MAPCO	REF			←	→	↑	↓			NEW	INFO
												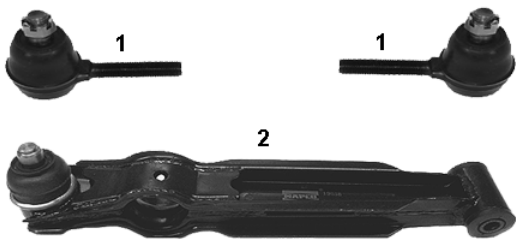
1	**59320**	48810-84000	✓		✓	✓			✓	✓		M12x1,25 RHT
2	**19518**	45200-50E00	✓		✓	✓			✓	✓		

SUZUKI ALTO II 01/86 → 11/93

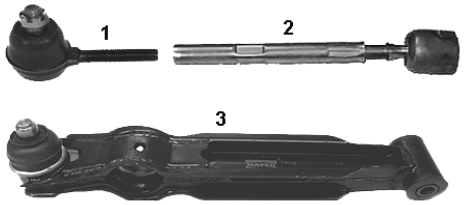

NR	MAPCO	REF								NEW	INFO
1	**59320**	48810-84000	✓		✓	✓			✓	✓		M12x1,25 RHT
2	**59317**	48830-84000	✓		✓	✓			✓	✓		M12x1,25 RHT
3	**19518**	45200-50E00	✓		✓	✓			✓	✓		

SUZUKI ALTO III 06/94 → 06/02

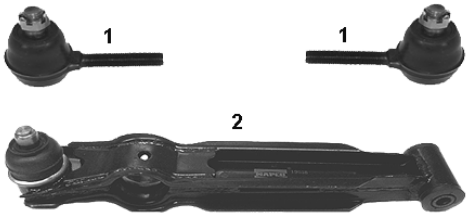

NR	MAPCO	REF								NEW	INFO
1	**59320**	48810-84000	✓		✓	✓			✓	✓		M12x1,25 RHT
2	**19518**	45200-50E00	✓		✓	✓			✓	✓		

SUZUKI BALENO 01/86 → 07/93



NR	MAPCO	REF								NEW	INFO
1	**59201**	48810-82000	✓		✓	✓			✓	✓		
2	**59850**	46630-60B01	✓		✓	✓			✓	✓		Chassis 103258 →

SUZUKI CARRY 01/86 → 07/93



NR	MAPCO	REF								NEW	INFO
1	**49563**	48820-79000	✓		✓				✓	✓		M14 x 1,5 LHT
2	**49564**	48810-79000	✓			✓			✓	✓		M14 x 1,5 RHT
3	**49565**	45200-85001	✓		✓	✓			✓	✓		

SUZUKI GRAND VITARA 03/98 →



NR	MAPCO	REF									NEW	INFO
1	**51595**	45202-67D01	✓		✓			✓	✓	✓	✓	
2	**51596**	45201-67D01	✓			✓		✓	✓	✓	✓	

SUZUKI IGNIS 10/00 →



NR	MAPCO	REF									NEW	INFO
1	**51250**	48810-60810-000	✓		✓	✓			✓	✓	✓	
2	**51251**	48830-63J00-000	✓		✓	✓						

SUZUKI SPLASH 01/08 →

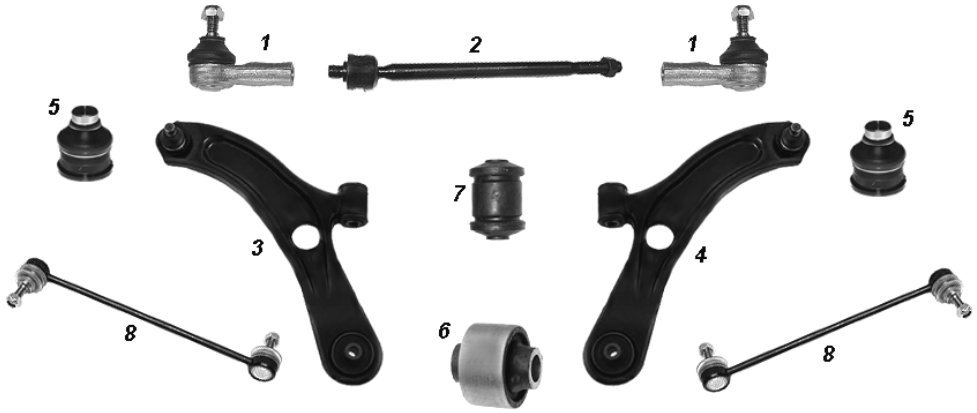

NR	MAPCO	REF									NEW	INFO
1	**51250**	48810-60810-000	✓		✓	✓			✓	✓	✓	
2	**51251**	48830-63J00-000	✓		✓	✓						
3	**51252**	45202-72K00-000	✓		✓			✓	✓	✓	✓	
4	**51253**	45201-72K00-000	✓			✓		✓	✓	✓	✓	
5	**51254**	No OE	✓		✓	✓		✓	✓	✓	✓	
6	**33576**	45540-62J00-000	✓		✓	✓		✓	✓	✓	✓	
7	**33577**	45530-63J00-000	✓		✓	✓		✓	✓	✓	✓	
8	**51255**	42420-62J00-000	✓		✓	✓			✓	✓	✓	

SUZUKI SUPER CARRY BUS 10/85 → 03/99



NR	MAPCO	REF									NEW	INFO
1	**59289**	45200-77500	✓		✓	✓		✓	✓	✓		

SUZUKI SWIFT I 10/83→ 12/89

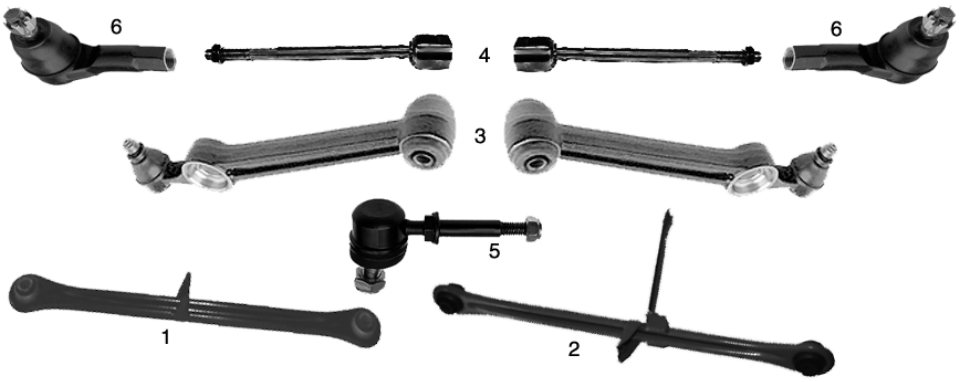

NR	MAPCO	REF									NEW	INFO
1	**49519**	46300-60B00		✓	✓	✓			✓	✓		
2	**49599**	46300-70C02		✓	✓	✓			✓	✓		
3	**49595**	45200 – 82000	✓		✓	✓			✓	✓		
4	**49596**	48830-82000	✓		✓	✓			✓	✓		M12X1,5RHT
5	**59299**	46630-60B11	✓		✓	✓			✓	✓		
6	**59201**	48810-82000	✓		✓	✓			✓	✓		
7	**19518**	45200-50E00	✓		✓	✓			✓	✓		

SUZUKI SWIFT II

03/89→ 05/01

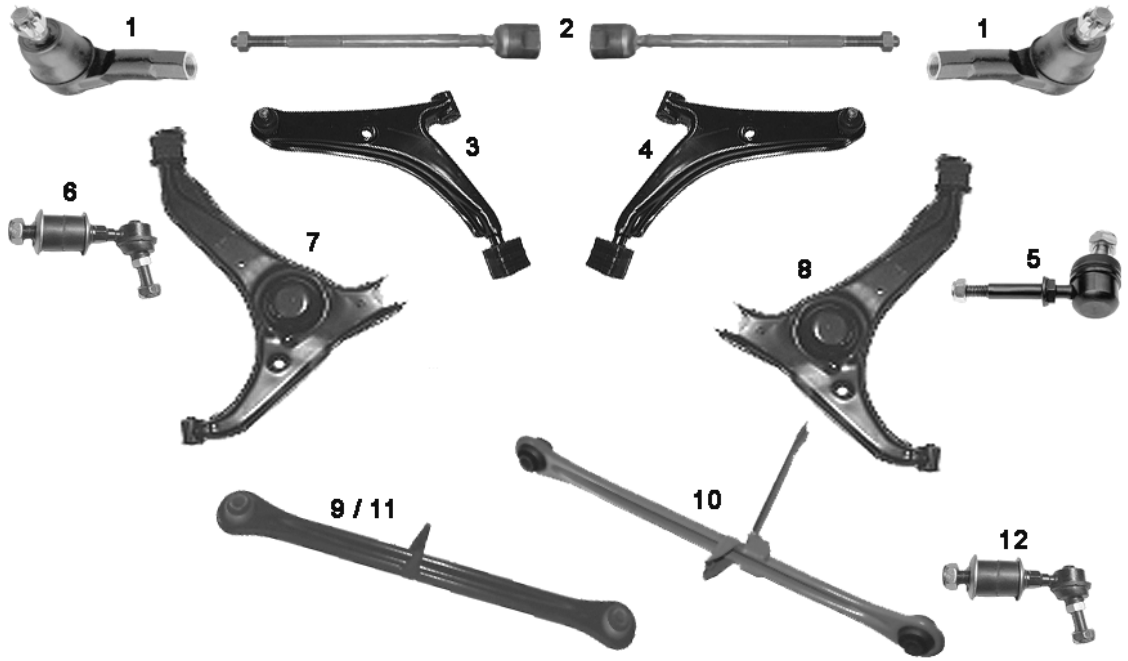

NR	MAPCO	REF								NEW	INFO
1	**59201**	48810-82000	✓		✓	✓			✓	✓		
2	**59298**	48830-60B00	✓		✓	✓			✓	✓		
3	**49292**	45202-60B01	✓		✓			✓	✓	✓		
4	**49293**	45201-60B01	✓			✓		✓	✓	✓		
5	**59299**	46630-60B11	✓		✓	✓			✓	✓		
6	**51593**	46630-60B00	✓		✓	✓			✓	✓		
7	**49549**	46202-60B00		✓	✓			✓	✓	✓		
8	**49548**	46201-60B00		✓		✓		✓	✓	✓		
9	**49519**	46300-60B00		✓	✓	✓			✓	✓		→ 1992
10	**49599**	46300-70C02		✓	✓				✓	✓		
11	**49594**	46300-60B10		✓	✓	✓			✓	✓		1992→
12	**51592**	46630-60B10		✓	✓	✓			✓	✓		

SUZUKI SWIFT III (SG) 02/05 →

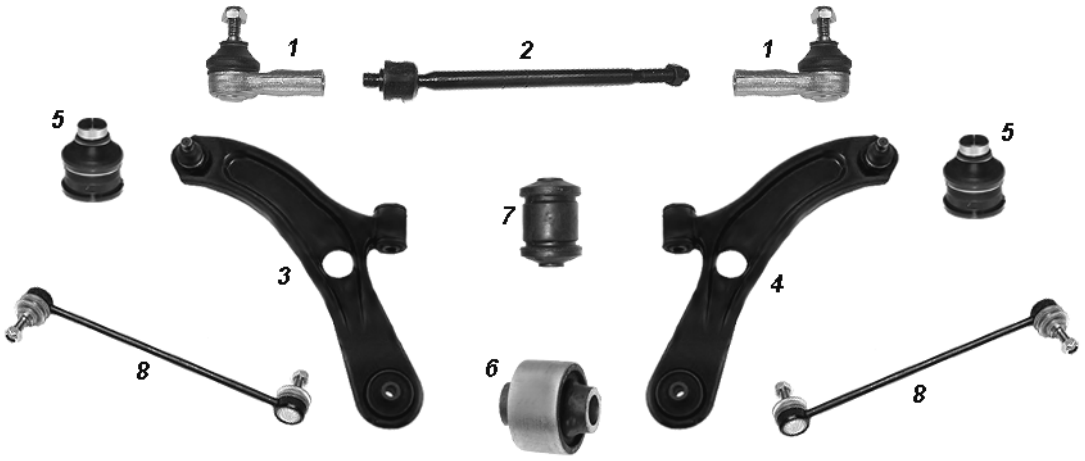

NR	MAPCO	REF									NEW	INFO
1	**51250**	48810-60810-000	✓		✓	✓			✓	✓	✓	
2	**51251**	48830-63J00-000	✓		✓	✓						
3	**51252**	45202-72K00-000	✓		✓			✓	✓	✓	✓	
4	**51253**	45201-72K00-000	✓			✓		✓	✓	✓	✓	
5	**51254**	No OE ref	✓		✓	✓		✓	✓	✓	✓	
6	**33576**	45540-62J00-000	✓		✓	✓		✓	✓	✓	✓	
7	**33577**	45530-63J00-000	✓		✓	✓		✓	✓	✓	✓	
8	**51255**	42420-62J00-000	✓		✓	✓			✓	✓	✓	

SUZUKI SX4 06/06→



NR	MAPCO	REF									NEW	INFO
1	**59024**	42420-80J00-000	✓		✓	✓			✓	✓	✓	

SUZUKI VITARA 07/88 → 03/99



NR	MAPCO	REF									NEW	INFO
1	**49561**	48820-60A00	✓		✓	✓		✓	✓	✓		M16 x 1,5 LHT
2	**49562**	48810-60A00	✓		✓	✓		✓	✓	✓		M16 x 1,5 RHT
3	**59324**	45700-60A00	✓		✓	✓			✓	✓		
4	**59300**	42311-60A00	✓		✓	✓		✓	✓	✓		

SUZUKI WAGON R+(EM)												02/98 → 05/00
NR	MAPCO	REF			←	→	↑	↓			NEW	INFO
1	**59320**	48810-84000	✓		✓	✓			✓	✓		M12x1,25 RHT 

VERGLEICHSNUMMERN DIENEN NUR ZUR BESSEREN IDENTIFIKATION UND DÜRFEN NICHT AUF RECHNUNGEN ERSCHEINEN!
Reference numbers are used for better identification only!
Références d'origine pour meilleure identification seulement!

TOYOTA

TOYOTA AURIS 03/07 →



NR	MAPCO	REF									NEW	INFO
1	**51392**	48820-02070	✓		✓	✓			✓	✓	✓	**360,0mm**

TOYOTA AVENSIS (_T22_) 09/97 → 02/03

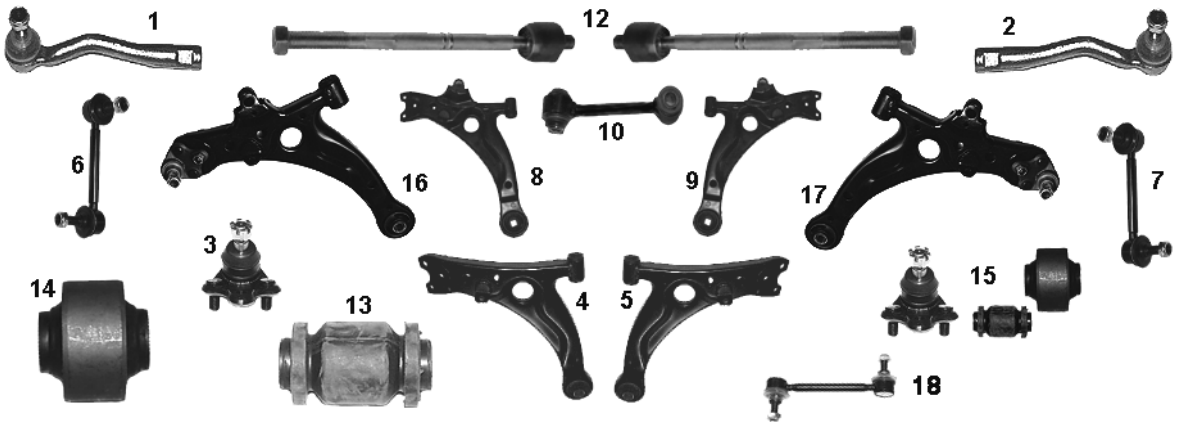

NR	MAPCO	REF									NEW	INFO
1	**49566**	45047-29125	✓		✓				✓	✓		M14 x 1,5RHT
2	**49567**	45046-29365	✓			✓			✓	✓		M14 x 1,5RHT
3	**19563**	43330-19095	✓		✓	✓			✓	✓		
4	**49576**	48069-05040	✓		✓			✓	✓	✓		STOP 1.8 Automatik →06/2000
5	**49577**	48068-05040	✓			✓		✓	✓	✓		STOP 1.8 Automatik →06/2000
6	**49270HPS**	48810-05012	✓		✓			✓	✓	✓		
7	**49271HPS**	48820-05012	✓			✓		✓	✓	✓		
8	**49257**	48069-05050	✓		✓			✓	✓	✓		
9	**49258**	48068-05050	✓			✓		✓	✓	✓		
10	**49259**	48650-20021	✓		✓	✓			✓	✓		
12	**49287**	45503-05020	✓		✓	✓			✓	✓		
13	**33565**	48654-05040	✓		✓	✓			✓	✓		
14	**33566**	48655-20140	✓		✓	✓			✓	✓		
15	**19253**		✓		✓	✓			✓	✓		**Kit**
16	**49257/1**	(48069-05050)	✓		✓			✓	✓	✓		**8+3**
17	**49258/1**	(48068-05050)	✓			✓		✓	✓	✓		**9+3**
18	**51377HPS**	48830-05020		✓	✓	✓			✓	✓	✓	**140,0mm**

TOYOTA AVENSIS VERSO (AC_) 08/01 →



NR	MAPCO	REF									NEW	INFO
1	**51373HPS**	48820-44020	✓		✓	✓			✓	✓	✓	

TOYOTA AVENSIS (_T25_) 04/03 →

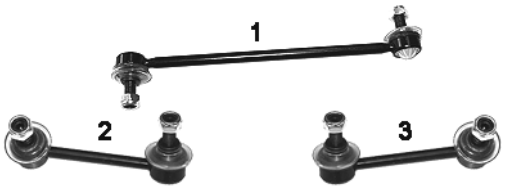

NR	MAPCO	REF									NEW	INFO
1	**51577HPS**	48820-47010	✓		✓	✓			✓	✓		285,0mm
2	**51371**	48840-21010		✓	✓				✓	✓	✓	105,0mm
3	**51372**	48830-21020		✓		✓			✓	✓	✓	105,0mm

TOYOTA AYGO 07/05→

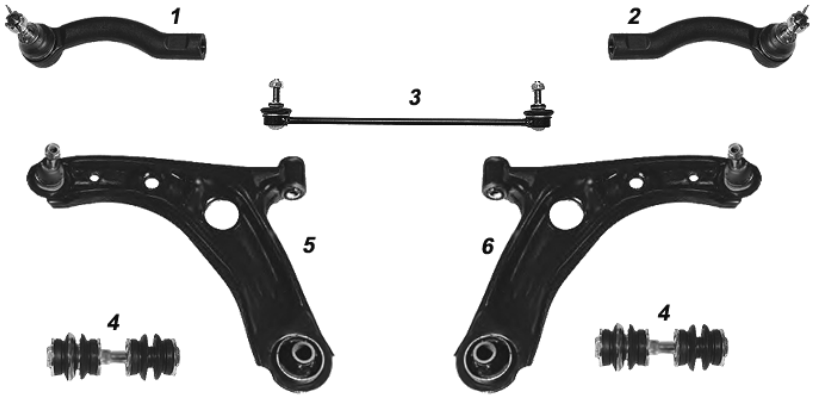

NR	MAPCO	REF									NEW	INFO
1	**49306**	45047-09125	✓		✓				✓	✓	✓	
2	**49307**	45046-09295	✓			✓			✓	✓	✓	
3	**19348HPS**	5087 59	✓		✓	✓			✓	✓		335,0 mm
4	**49308**	48819-70010	✓		✓	✓			✓	✓	✓	
5	**49318**	48069-0H010	✓		✓				✓	✓	✓	
6	**49319**	48068-0H010	✓			✓			✓	✓	✓	

TOYOTA CAMRY (_V2_) 10/86→05/91

NR	MAPCO	REF									NEW	INFO
1	**59328**	45503-29105	✓		✓				✓	✓		M14 x 1,5 RHT  1

TOYOTA CAMRY (_V1_) 06/91→ 06/97

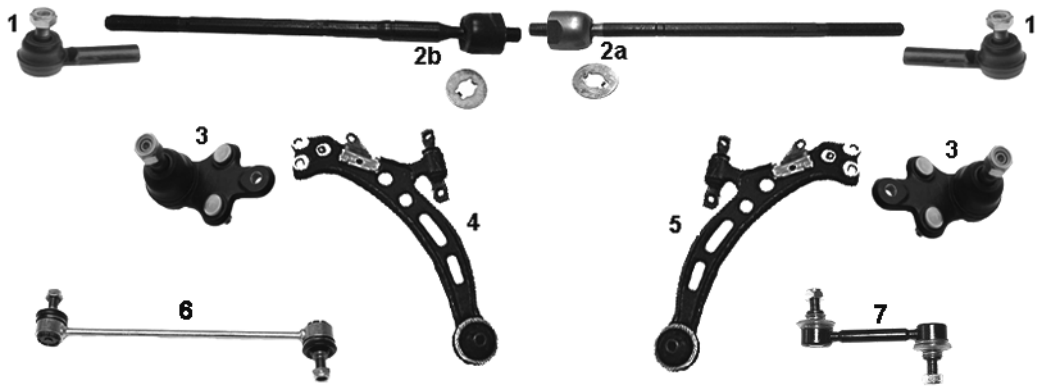

NR	MAPCO	REF								NEW	INFO
1	**59276**	45046-29255	✓		✓	✓			✓	✓	
2a	**59268**	45503-29355	✓		✓	✓			✓	✓	310,0 mm 06/91→ 07/91
2b	**59272**	45503-39135	✓		✓	✓			✓	✓	350,0 mm 06/91→ 08/96
3	**59567**	43330-39285	✓		✓	✓			✓	✓	
4	**59374**	48069-33010	✓		✓				✓	✓	
5	**59375**	48068-33010	✓			✓			✓	✓	
6	**49285**	48830-33010		✓	✓	✓			✓	✓	**4x2**
7	**49579HPS**	48830-32010		✓	✓	✓			✓	✓	

TOYOTA CAMRY (_V20) 08/96→ 11/01

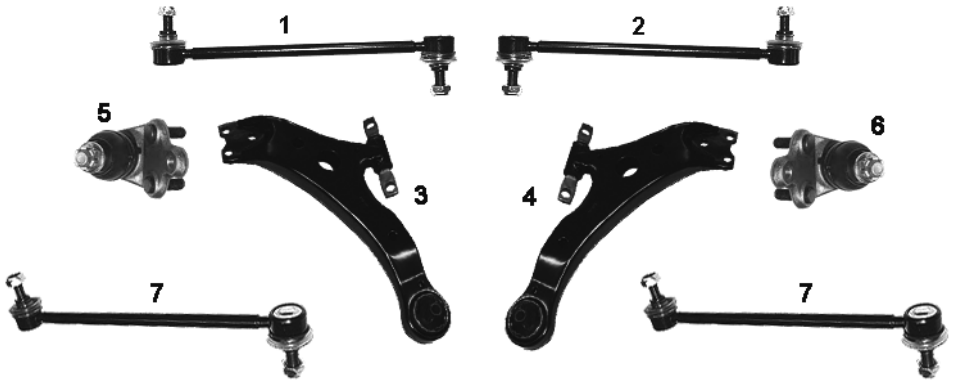

NR	MAPCO	REF								NEW	INFO
1	**49280HPS**	48810-33010	✓		✓				✓	✓	
2	**49281HPS**	48820-33020	✓			✓			✓	✓	
3	**51552**	48069-33050	✓		✓				✓	✓	✓ **3.0 V6**
4	**51553**	48068-33070	✓			✓			✓	✓	✓ **3.0 V6**
5	**51388**	43330-29405	✓		✓				✓	✓	✓ 17,5 mm
6	**51389**	45503-39225	✓			✓			✓	✓	✓ 17,5 mm
7	**49282HPS**	48830-32040		✓	✓	✓			✓	✓	**4x4**

TOYOTA CAMRY (_V30) 11/01→

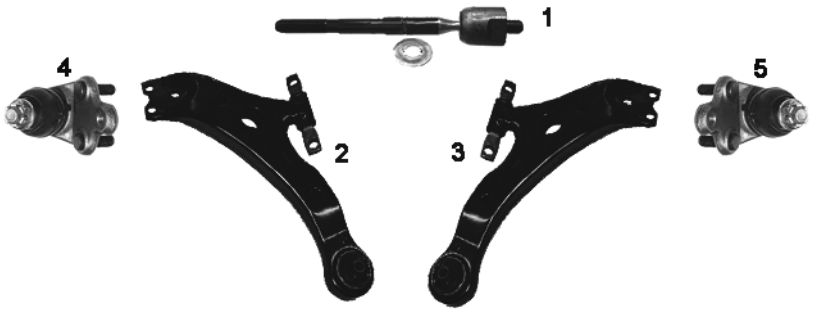

NR	MAPCO	REF			←	→	↑	↓			NEW	INFO
1	**51390**	45503 39225	✓		✓	✓			✓	✓	✓	238mm
2	**51552**	48069-33050	✓		✓				✓	✓		
3	**51553**	48068-33070	✓			✓			✓	✓		
4	**51388**	43330-29405	✓		✓				✓	✓	✓	17,5 mm
5	**51389**	45503-39225	✓			✓			✓	✓	✓	17,5 mm

TOYOTA CARINA II (_T15_) 01/84→ 03/88

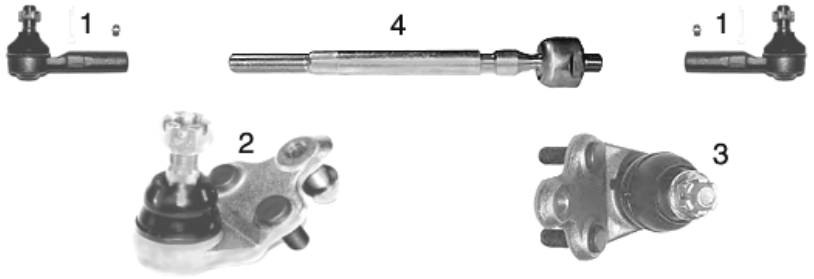

NR	MAPCO	REF			←	→	↑	↓			NEW	INFO
1	**19560**	45046-19175	✓		✓	✓			✓	✓		M14 x1,5RHT
2	**59565**	43330-29145	✓		✓	✓			✓			
3	**59323**	43330-29135	✓		✓	✓				✓		
4	**59332**	45503-19036	✓		✓	✓			✓	✓		M14x1,5RHT 330mm

TOYOTA CARINA II (_T17) 12/87→ 06/93



NR	MAPCO	REF			←	→	↑	↓			NEW	INFO
1	**59279**	45047-29045	✓		✓				✓	✓		
2	**59275**	45046-29165	✓			✓			✓	✓		
3	**59265**	45503-29165	✓		✓	✓			✓			SMI
4	**59264**	45503-29155	✓		✓	✓				✓		SMI

TOYOTA CARINA E (_T19_) 04/92→ 09/97

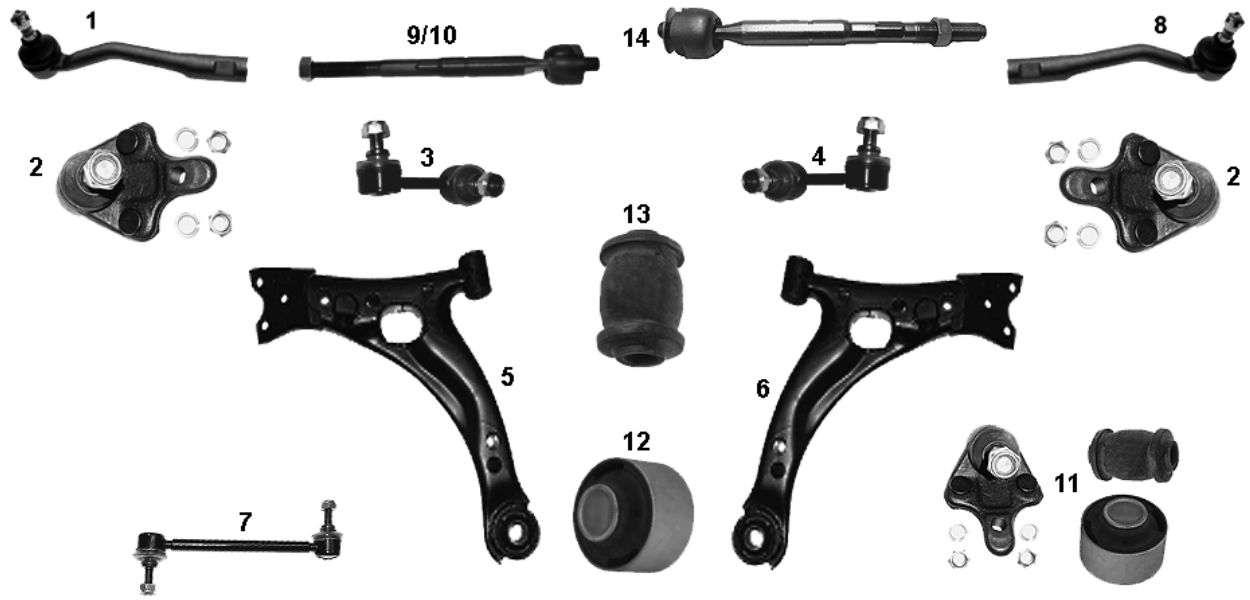

NR	MAPCO	REF								NEW	INFO
1	**59281**	45047-29075	✓		✓				✓	✓	
2	**19571**	43330-29375	✓		✓	✓			✓	✓	
3	**19576**	48810-20010	✓		✓				✓	✓	
4	**19575**	48820-20030	✓			✓			✓	✓	
5	**49574**	48069-20260	✓		✓				✓	✓	TYP A
6	**49575**	48068-20260	✓			✓			✓	✓	TYP A
7	**49579HPS**	48830-32010		✓	✓	✓			✓	✓	
8	**59277**	45046-29275	✓			✓			✓	✓	
9	**49288**	45503-29435	✓		✓	✓			✓	✓	**Toyota Lenkung/ steering**
10	**49289**	45503-05010	✓		✓	✓			✓	✓	**ZF Lenkung/ steering**
11	**19252**		✓		✓	✓			✓	✓	**Kit**
12	**33563**	48655-52014	✓		✓	✓			✓	✓	
13	**33564**	48654-20170	✓		✓	✓			✓	✓	
14	**59270**	45503-29475	✓		✓	✓			✓	✓	✓ **1.8 107 PS**

TOYOTA CELICA (_T16_) 12/85→ 12/89

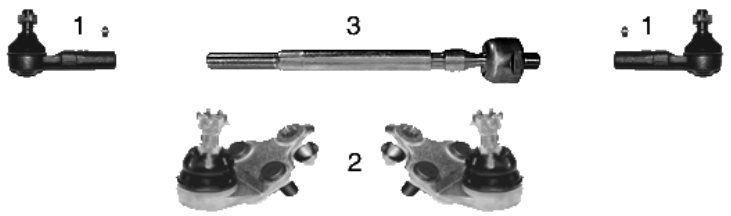

NR	MAPCO	REF								NEW	INFO
1	**19560**	45046-19175	✓		✓	✓			✓	✓	M14 x 1,5 RHT
2	**59565**	43330-29145	✓		✓	✓			✓	✓	
3	**59332**	45503-19036	✓		✓	✓			✓	✓	M14x1,5RHT 330mm

TOYOTA CELICA (_T18_) 10/89→ 01/94

NR	MAPCO	REF			←	→	↑	↓		NEW	INFO
1	**59234**	43330-29225	✓		✓	✓		✓	✓	✓	

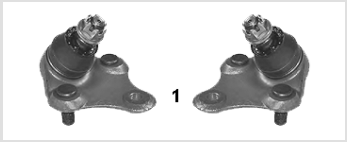

TOYOTA CELICA (_T20_) 11/93→ 11/99



NR	MAPCO	REF			←	→	↑	↓		NEW	INFO
1	**19560**	45046-29305	✓		✓	✓			✓	✓	
2	**19571**	43330-29375	✓		✓	✓			✓	✓	
3	**49579HPS**	48830-32010		✓	✓	✓			✓	✓	

TOYOTA CELICA (ZZT23) 11/99→

NR	MAPCO	REF			←	→	↑	↓		NEW	INFO
1	**51597HPS**	48820-32010	✓		✓	✓			✓	✓	



TOYOTA COROLLA EE80 – CE80 12/84→ 12/87

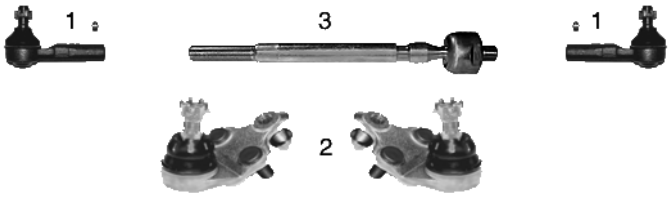

NR	MAPCO	REF			←	→	↑	↓		NEW	INFO
1	**19560**	45046-19175	✓		✓	✓			✓	✓	M14 x 1,5 RHT
2	**59323**	43330-29137	✓		✓	✓			✓	✓	
3	**59332**	45503-19036	✓		✓	✓			✓	✓	M14x1,5RHT 330mm

TOYOTA COROLLA AE 92, EE90 08/87→ 1992

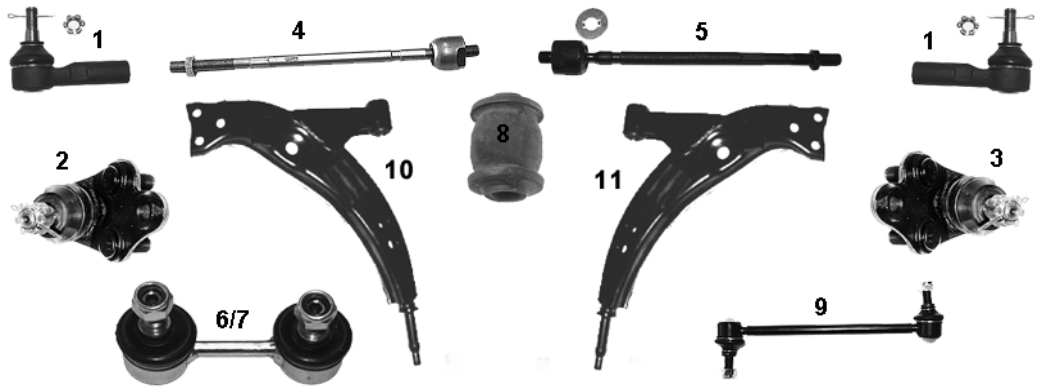

NR	MAPCO	REF								NEW	INFO
1	**19560**	45046-19175	✓		✓	✓			✓	✓		M14 x 1,5 RHT
2	**19561**	43340-19015	✓		✓				✓	✓		
3	**19562**	43330-19065	✓			✓			✓	✓		
4	**19564**	45503-19125	✓		✓	✓				✓		
5	**19565**	45503-19135	✓		✓	✓			✓			
6	**19574**	48820-20010	✓		✓	✓			✓	✓		✓ 1600i
7	**19572**	48820-20021	✓		✓	✓			✓	✓		
8	**33560**	48654-12050	✓		✓	✓			✓	✓		
9	**49579HPS**	48830-20010		✓	✓	✓			✓	✓		
10	**49276**	48069-12110	✓		✓				✓	✓		
11	**49277**	48068-12110	✓			✓			✓	✓		

TOYOTA COROLLA _E9_ 1988→ 06/92

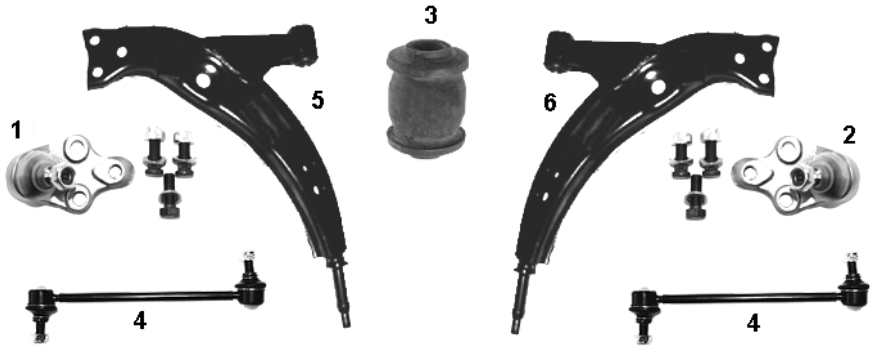

NR	MAPCO	REF								NEW	INFO
1	**19568**	43340-19016	✓		✓				✓	✓		
2	**19569**	43330-19066	✓			✓			✓	✓		
3	**33560**	48654-12050	✓		✓	✓			✓	✓		
4	**49579HPS**	48830-32010		✓	✓	✓			✓	✓		
5	**49276**	48069-12110	✓		✓				✓	✓		
6	**49277**	48068-12110	✓			✓			✓	✓		

TOYOTA COROLLA _E10_ 07/92→ 04/97

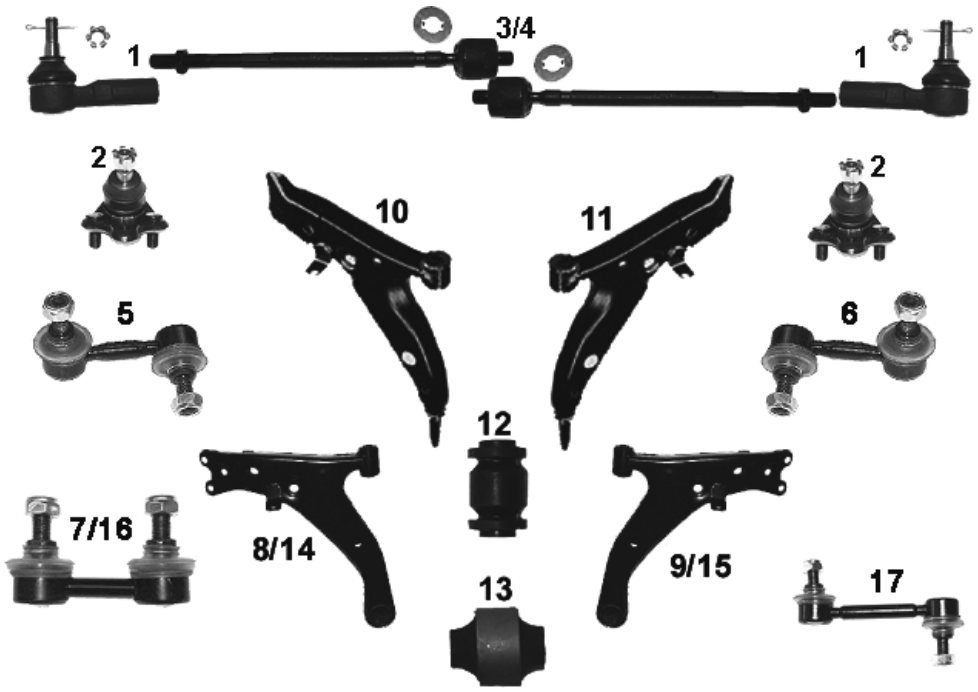

NR	MAPCO	REF								NEW	INFO
1	**19560**	45046-19175	✓		✓	✓			✓	✓		M14 x 1,5 RHT
2	**19563**	43330-29265	✓		✓	✓			✓	✓		
3	**19566**	45503-29385	✓		✓	✓				✓		
4	**19567**	45503-19215	✓		✓	✓			✓			
5	**19577**	48810-20020	✓		✓				✓	✓		
6	**19578**	48820-20040	✓			✓			✓	✓		
7	**19572**	48820-20021	✓		✓	✓			✓	✓		→12/93
8	**49572**	48069-12190	✓		✓				✓	✓		✓ _E 110
9	**49573**	48068-12190	✓			✓			✓	✓		✓ _E 110
10	**49570**	48069-12140	✓		✓				✓	✓		✓ _E100→05/1995
11	**49571**	48068-12140	✓			✓			✓	✓		✓ _E100→05/1995
12	**33561**	48654-12070	✓		✓	✓			✓	✓		
13	**33562**	48655-12120	✓		✓	✓			✓	✓		✓ AE 110
14	**49550**	48069-02010	✓		✓				✓	✓		✓_E101 06/1995→
15	**49551**	48068-02010	✓			✓			✓	✓		✓_E101 06/1995→
16	**19573**	48820-33010	✓		✓	✓			✓	✓		12/93→
17	**49579HPS**	48830-20010		✓	✓	✓			✓	✓		

TOYOTA COROLLA _EE11_, _ZE11_ 05/97→01/02

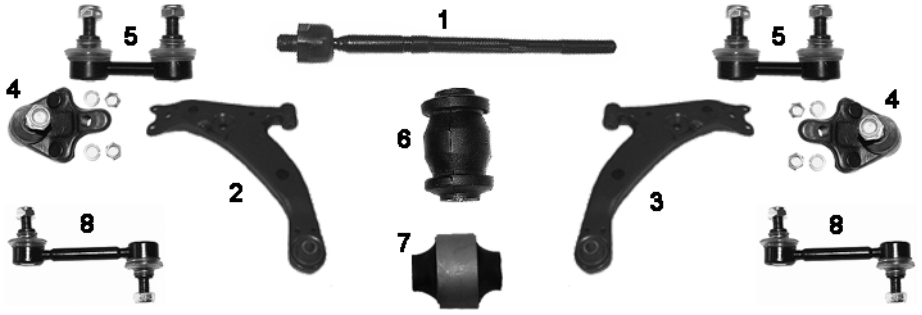

NR	MAPCO	REF									NEW	INFO
1	**51382**	45503-12130	✓		✓	✓			✓	✓	✓	M14x1,5
2	**49550**	48069-02010	✓		✓				✓	✓		
3	**49551**	48068-02010	✓			✓			✓	✓		
4	**49552**	43330-19115	✓		✓	✓			✓	✓		
5	**19573**	48820-33010	✓		✓	✓			✓	✓		M10x1,25
6	**33561**	48654-12070-2	✓		✓	✓			✓	✓		
7	**33562**	48655-12120	✓		✓	✓			✓	✓		
8	**49579HPS**	48830-12060		✓	✓	✓			✓	✓		→08/98

TOYOTA COROLLA _E12_ 01/02→
TOYOTA COROLLA VERSO _E12J_ 01/02→

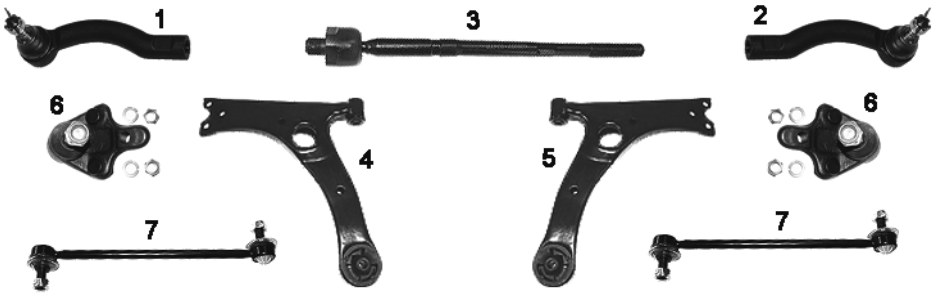

NR	MAPCO	REF									NEW	INFO
1	**51380**	45047-19115	✓		✓				✓	✓	✓	
2	**51381**	45046-19265	✓			✓			✓	✓	✓	
3	**51382**	45503-12130	✓		✓	✓			✓	✓	✓	M14x1,5
4	**51560**	48069-12260	✓		✓				✓	✓	✓	
5	**51561**	48068-12260	✓			✓			✓	✓	✓	
6	**49552**	43330-19115	✓		✓	✓			✓	✓		
7	**51577HPS**	48820-47010	✓		✓	✓			✓	✓	✓	285,0mm

TOYOTA HIACE II 03/83→ 11/89

NR	MAPCO	REF									NEW	INFO
1	**59335**	43330-29125	✓		✓	✓		✓	✓	✓		18,2mm  1

TOYOTA HIACE III 08/89→ 08/95

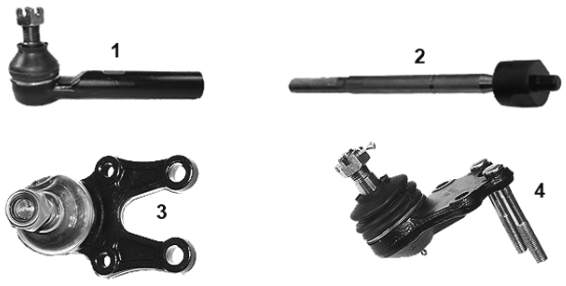

NR	MAPCO	REF								NEW	INFO
1	**59238**	45046-29215	✓		✓	✓			✓	✓		M17x1,5 RHT
2	**59266**	45503-29255	✓		✓	✓			✓	✓		
3	**59335**	43330-29125	✓		✓	✓		✓	✓	✓		18,2mm
4	**59235**	43350-29095	✓		✓	✓	✓		✓	✓		

TOYOTA HIACE IV 08/95→

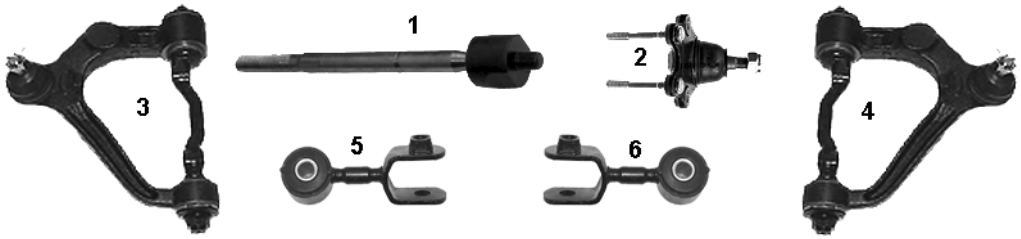

NR	MAPCO	REF								NEW	INFO
1	**59266**	45503-29255	✓		✓	✓			✓	✓		
2	**59235**	43350-29095	✓		✓	✓	✓		✓	✓		
3	**59285**	48067-29075	✓		✓		✓		✓	✓		
4	**59286**	48066-29075	✓			✓	✓		✓	✓		
5	**51588**	48810-26030	✓		✓				✓	✓		
6	**51589**	48820-26030	✓			✓			✓	✓		

TOYOTA HILUX Pick-up _N_ 01/84→

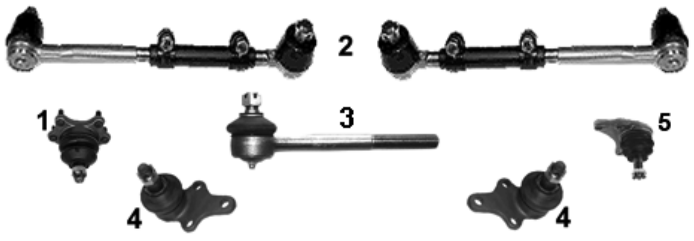

NR	MAPCO	REF								NEW	INFO
1	**59261**	43350-39045	✓		✓	✓	✓		✓	✓		17mm
2	**59262**	45460-29215	✓		✓	✓			✓	✓		
3	**59282**	45046-39125	✓		✓	✓			✓	✓		
4	**59569**	43330-39245	✓		✓	✓		✓	✓	✓		
5	**59236**	43350-39035	✓		✓	✓	✓		✓	✓		15mm

TOYOTA LAND CRUISER (_J7_) 11/84→
TOYOTA LAND CRUISER Hardtop (_J7_) 07/90→ 05/96



NR	MAPCO	REF								NEW	INFO
1	**51568**	48810-60010	✓		✓				✓	✓		09/93→
2	**51573**	48820-60010	✓			✓			✓	✓		09/93→
3	**51576**	48830-60010		✓	✓	✓			✓	✓		09/93→

TOYOTA LAND CRUISER (_J9_) 04/95→

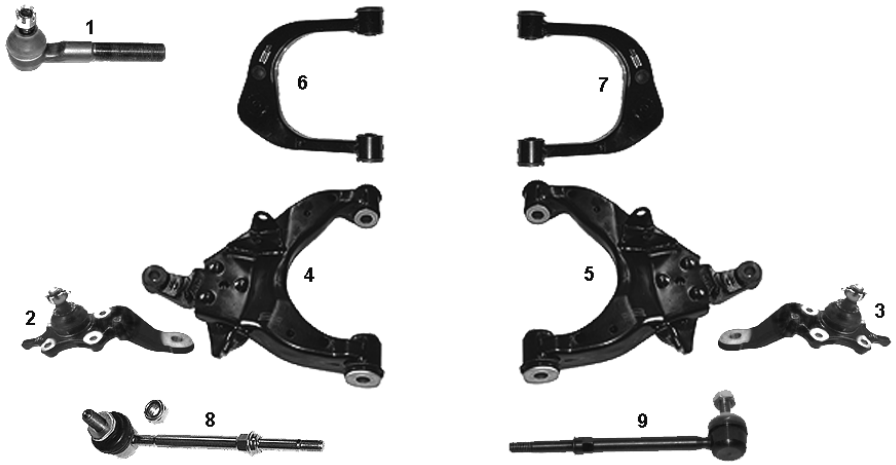

NR	MAPCO	REF								NEW	INFO
1	**59237**	45045-69065	✓		✓				✓	✓		M21x1,5 RHT
2	**59353**	43340-39325	✓		✓			✓	✓	✓		
3	**59354**	43330-39415	✓			✓		✓	✓	✓		
4	**59391**	48069-35081	✓		✓			✓	✓	✓		03/98→
5	**59392**	48068-35081	✓			✓		✓	✓	✓		03/98→
6	**51571**	48630-35020	✓		✓		✓		✓	✓		
7	**51572**	48610-35040	✓			✓	✓		✓	✓		
8	**51569**	48820-35030	✓		✓	✓			✓	✓		
9	**51570**	48830-35020		✓	✓	✓			✓	✓		

TOYOTA LAND CRUISER 100 (_J10_) 01/98→



NR	MAPCO	REF								NEW	INFO
1	**51574**	48820-60032	✓		✓	✓			✓	✓		
2	**51584HPS**	48820-30050	✓		✓				✓	✓		
3	**51585HPS**	48810-30030	✓			✓			✓	✓		

TOYOTA LAND CRUISER (_J12_) 01/03→

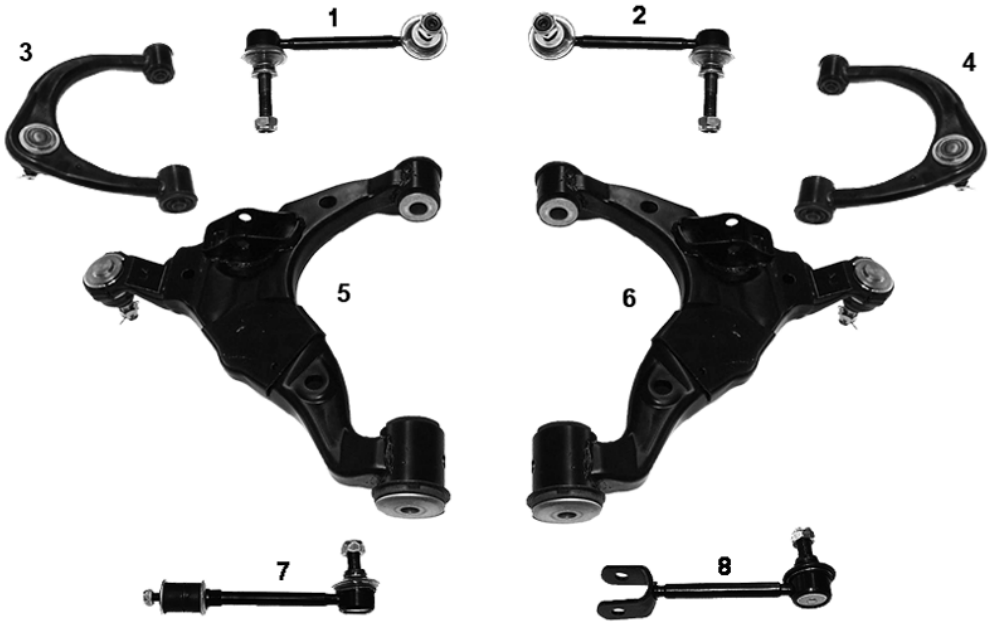

NR	MAPCO	REF								NEW	INFO
1	**51378HPS**	48810-60040	✓		✓				✓	✓	✓	
2	**51379HPS**	48820-60050	✓			✓			✓	✓	✓	
3	**51386**	48630-60020	✓		✓		✓		✓	✓	✓	LEA
4	**51387**	48610-60050	✓			✓	✓		✓	✓	✓	LEA
5	**51384**	48069-60010	✓		✓			✓	✓	✓	✓	LEA
6	**51385**	48068-60010	✓			✓		✓	✓	✓	✓	LEA
7	**51374HPS**	48830-60030		✓	✓	✓			✓	✓	✓	
8	**51576**	48830-60010		✓	✓	✓			✓	✓		

TOYOTA LITEACE 10/85→ 01/92



NR	MAPCO	REF								NEW	INFO
1	**51383**	43350-29035	✓		✓	✓	✓		✓	✓	✓	15,0 mm
2	**59318**	43330-29115	✓		✓	✓		✓	✓	✓		16,8 mm

TOYOTA MR 2 (_W1_) 10/84→ 05/00

NR	MAPCO	REF								NEW	INFO
1	**59334**	43330-19025	✓		✓	✓		✓	✓	✓		14,3mm 

TOYOTA PASEO
TOYOTA PASEO

08/95→03/99
08/95→07/99

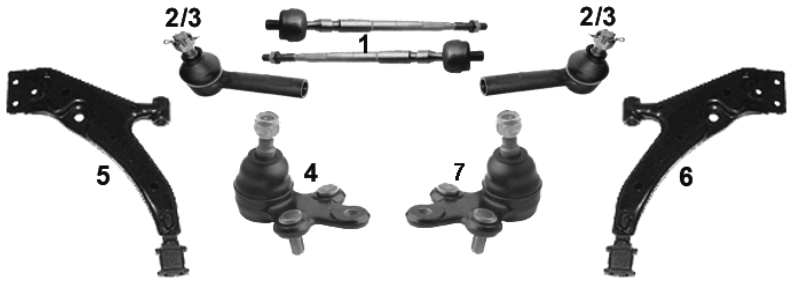

NR	MAPCO	REF									NEW	INFO
1	**59263**	45503-19155	✓		✓	✓			✓	✓		
2	**59273**	45046-19065	✓		✓	✓			✓	✓		
3	**59274**	45046-19213	✓		✓	✓			✓	✓		
4	**59568**	43340-19025	✓		✓			✓	✓	✓		
5	**59288**	48069-16060	✓		✓			✓	✓	✓		
6	**59287**	48068-16060	✓			✓		✓	✓	✓		
7	**59564**	43330-19025	✓			✓		✓	✓	✓		

TOYOTA PICNIC (_XM10)

05/96 → 12/01



NR	MAPCO	REF									NEW	INFO
1	**51373HPS**	48820-44020	✓		✓	✓			✓	✓	✓	

TOYOTA PREVIA (TCR10)

05/90→ 08/00

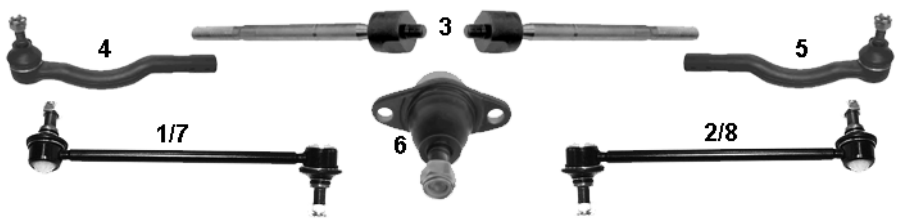

NR	MAPCO	REF									NEW	INFO
1	**49283HPS**	48810-28020	✓		✓				✓	✓		**M10x1,25**
2	**49284HPS**	48820-28030	✓			✓			✓	✓		**M10x1,25**
3	**59267**	45503-29295	✓		✓	✓			✓	✓		
4	**59280**	45047-29065	✓		✓				✓	✓		
5	**59239**	45046-29235	✓			✓			✓	✓		
6	**59566**	43330-29235	✓		✓	✓			✓	✓		
7	**59361HPS**	48810-28010	✓		✓				✓	✓		**M12x1,25**
8	**59362HPS**	48820-28010	✓			✓			✓	✓		**M12x1,25**

TOYOTA PREVIA (ACR3_) 08/00→

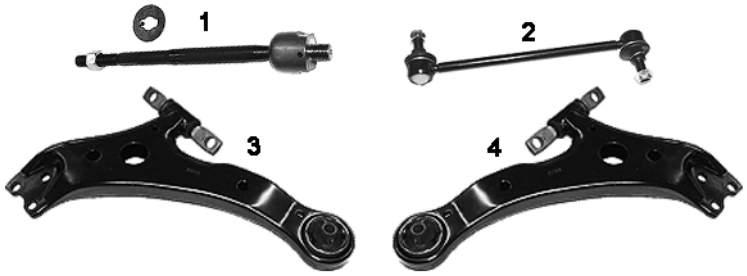

NR	MAPCO	REF			←	→	↑	↓			NEW	INFO
1	**59293**	45503-29765	✓		✓	✓			✓	✓		
2	**59363HPS**	48820-28050	✓		✓	✓			✓	✓		
3	**51552**	48069-33050	✓		✓				✓	✓		
4	**51553**	48068-33070	✓			✓			✓	✓		

TOYOTA PRIUS 05/00 →



NR	MAPCO	REF			←	→	↑	↓			NEW	INFO
1	**51380**	45047-19115	✓		✓				✓	✓	✓	
2	**51381**	45046-19265	✓			✓			✓	✓	✓	
1	**51577HPS**	48820-47010	✓		✓	✓			✓	✓		285,0mm

TOYOTA RAV 4 I 2.0 16V 06/94→ 06/00

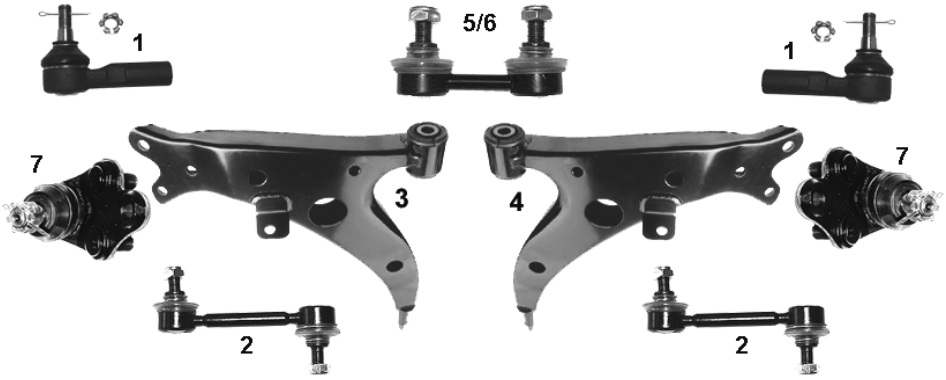

NR	MAPCO	REF			←	→	↑	↓			NEW	INFO
1	**19560**	45046-29305	✓		✓	✓			✓	✓		
2	**49579HPS**	48830-32010		✓	✓	✓			✓	✓		
3	**49272**	48069-42022	✓		✓				✓	✓		
4	**49273**	48068-42012	✓			✓			✓	✓		
5	**49274HPS**	48820-42010	✓		✓	✓			✓	✓		1997→
6	**19573**	48820-33010	✓		✓	✓			✓	✓		1992→1997
7	**19563**	43330-19115	✓		✓	✓			✓	✓		

TOYOTA RAV 4 II (XA2) 06/00→

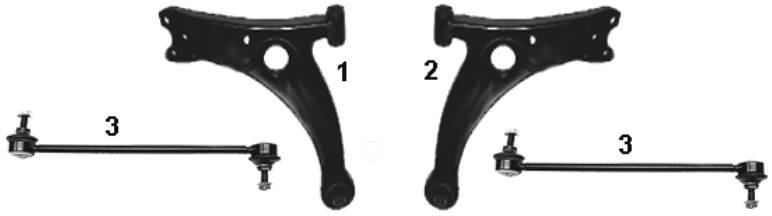

NR	MAPCO	REF									NEW	INFO
1	**59380**	48069-42040	✓		✓				✓	✓		
2	**59381**	48068-42040	✓			✓			✓	✓		
3	**49237HPS**	48820-42020	✓		✓	✓			✓	✓		M10x1,25 260 mm

TOYOTA RAV 4 III 03/06 →

NR	MAPCO	REF									NEW	INFO
1	**51392**	48820-02070	✓		✓	✓			✓	✓	✓	360 mm 1 

TOYOTA STARLET _P7_ 10/84→12/92

NR	MAPCO	REF									NEW	INFO
1	**59563**	43330-19045	✓		✓	✓			✓	✓		1 

TOYOTA STARLET _P8_ 12/89→03/96



NR	MAPCO	REF									NEW	INFO
1	**59263**	45503-19195	✓		✓	✓			✓	✓		
2	**59273**	45046-19065	✓		✓	✓			✓	✓		
3	**59274**	45046-19213	✓		✓	✓			✓	✓		
4	**59568**	43340-19025	✓		✓			✓	✓	✓		
5	**59564**	43330-19025	✓			✓		✓	✓	✓		

TOYOTA STARLET _EP91_ 04/96→03/99



NR	MAPCO	REF								NEW	INFO
1	**59568**	43340-19025	✓		✓				✓	✓	
2	**59564**	43330-19025	✓			✓			✓	✓	

TOYOTA TERCEL 03/79→ 01/88

NR	MAPCO	REF								NEW	INFO
1	**59334**	43330-19025	✓		✓	✓		✓	✓	✓	 14,3mm

TOYOTA YARIS (_CP10) 04/99→

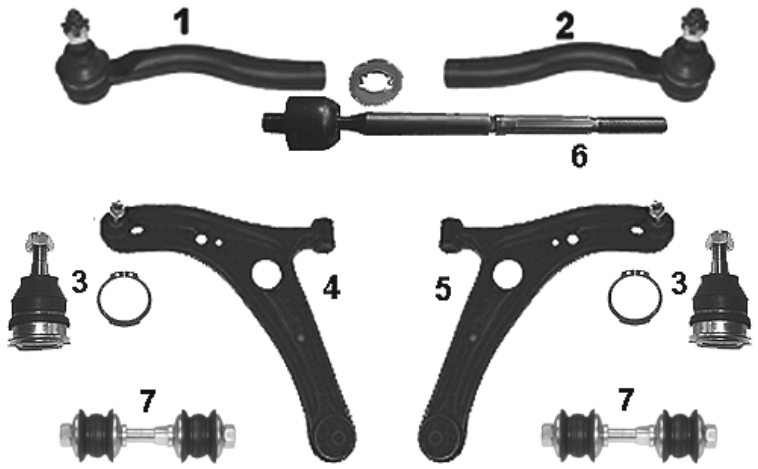

NR	MAPCO	REF								NEW	INFO
1	**59560**	45047-59026	✓		✓				✓	✓	
2	**59561**	45046-59026	✓			✓			✓	✓	
3	**59562**	48069-59035part	✓		✓	✓		✓	✓	✓	
4	**49568**	48069-59035	✓		✓			✓	✓	✓	
5	**49569**	48068-59035	✓			✓		✓	✓	✓	
6	**59294**	45503-52010	✓		✓	✓			✓	✓	
7	**51391**	48819 52010	✓		✓	✓			✓	✓	✓

TOYOTA 4-RUNNER (_N130_) 10/93→ 11/95

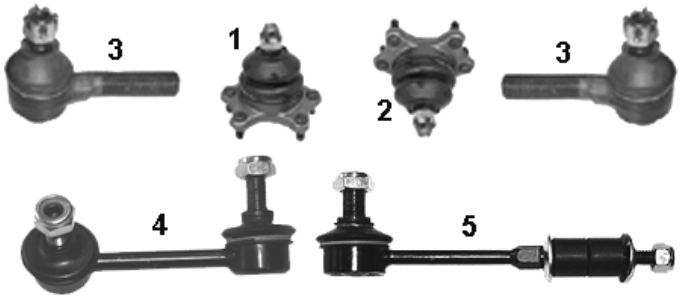

NR	MAPCO	REF			←	→	↑	↓			NEW	INFO
1	**59261**	43360-39085	✓		✓	✓		✓	✓	✓		
2	**59260**	43330-39265	✓		✓	✓	✓		✓	✓		
3	**59278**	45046-39235	✓		✓	✓			✓	✓		
4	**51586**	48820-35010	✓		✓	✓			✓	✓		
5	**51587**	48830-35010		✓	✓	✓			✓	✓		

VERGLEICHSNUMMERN DIENEN NUR ZUR BESSEREN IDENTIFIKATION
UND DÜRFEN NICHT AUF RECHNUNGEN ERSCHEINEN!
Reference numbers are used for better identification only!
Références d´origine pour meilleure identification seulement!

VOLKSWAGEN

VOLKSWAGEN BORA 1996→

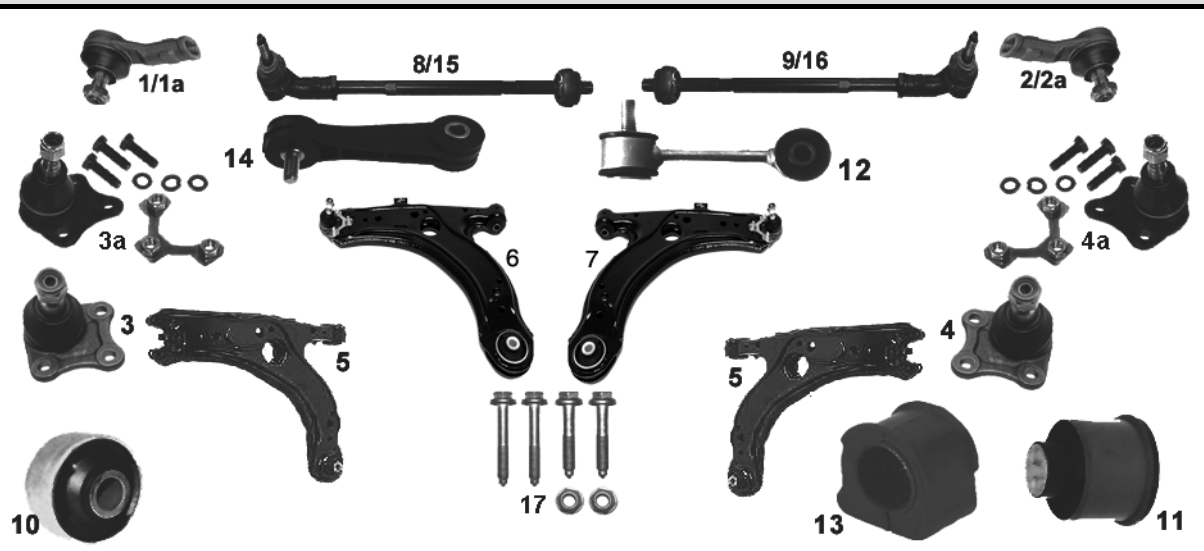

NR	MAPCO	REF								NEW	INFO
1	49700	1J0 422 811B	✓		✓				✓	✓	94mm M14x1,5RHT, Chassis WP050833→
1a	59895	1J0 422 811A	✓		✓				✓	✓	75mm M14x1,5RHT, Chassis →WP050832
2	49701	1J0 422 812B	✓			✓			✓	✓	94mm M14x1,5RHT, Chassis WP050833→
2a	59896	1J0 422 812A	✓			✓			✓	✓	75mm M14x1,5RHT, Chassis →WP050832
3	49702	1J0 407 365C	✓		✓				✓	✓	
3a	49702/1	1J0 407 365A	✓		✓				✓	✓	
4	49703	1J0 407 366C	✓			✓			✓	✓	
4a	49703/1	1J0 407 366A	✓			✓			✓	✓	
5	49704	1J0 407 151B	✓		✓	✓			✓	✓	
6	49704/1		✓		✓				✓	✓	**5+3a**
7	49704/2		✓			✓			✓	✓	**5+4a**
8	49690	1J0 422 803B	✓		✓				✓	✓	Chassis WP050833→
9	49691	1J0 422 804B	✓			✓			✓	✓	Chassis WP050833→
10	33903	1J0 407 181	✓		✓	✓			✓	✓	
11	33912	1J0 501 541C		✓	✓	✓			✓	✓	
12	49867	1J0 411 315C	✓		✓	✓			✓	✓	Stahl/steel 105mm, Ø 23mm
13	33927	1J0 411 314B	✓		✓	✓			✓	✓	Innen Ø 19mm
14	49868	1J0 411 315C	✓		✓	✓			✓	✓	Plastik 105mm Ø 21mm
15	49869	1J0 422 803A	✓		✓				✓	✓	Chassis→WP050832
16	49870	1J0 422 804A	✓			✓			✓	✓	Chassis→WP050832
17	95704		✓		✓	✓			✓	✓	MS

VOLKSWAGEN CADDY II KASTEN (9K9) 11/95→01/04

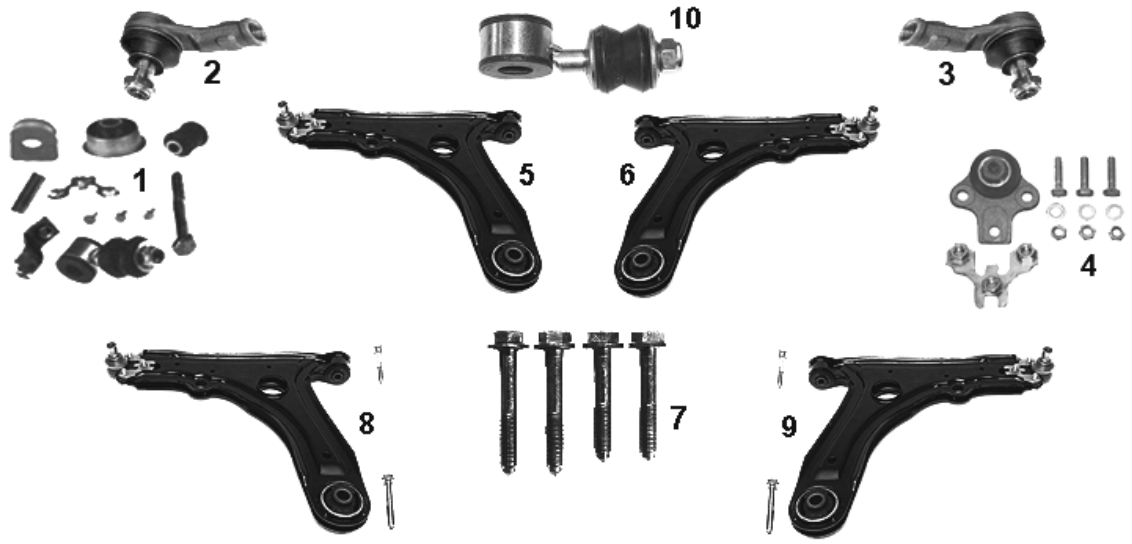

NR	MAPCO	REF								NEW	INFO
1	**33890**		✓		✓	✓			✓	✓	
2	**19877**	191419811	✓		✓				✓	✓	M14x1,5RHT
3	**19878**	191419812	✓			✓			✓	✓	M14x1,5RHT
4	**19889/1**	357407365A	✓		✓	✓			✓	✓	19mm
5	**19858/1**		✓		✓				✓	✓	
6	**19858/2**		✓			✓			✓	✓	
7	**95858**		✓		✓	✓			✓	✓	MS
8	**19858/7**		✓		✓				✓	✓	+
9	**19858/8**		✓			✓			✓	✓	+
10	**51862**	191411315A	✓		✓	✓			✓	✓	✓ Ø 18 mm -> 9K V 525700

Volkswagen CADDY III Kombi / Kasten 03/04→

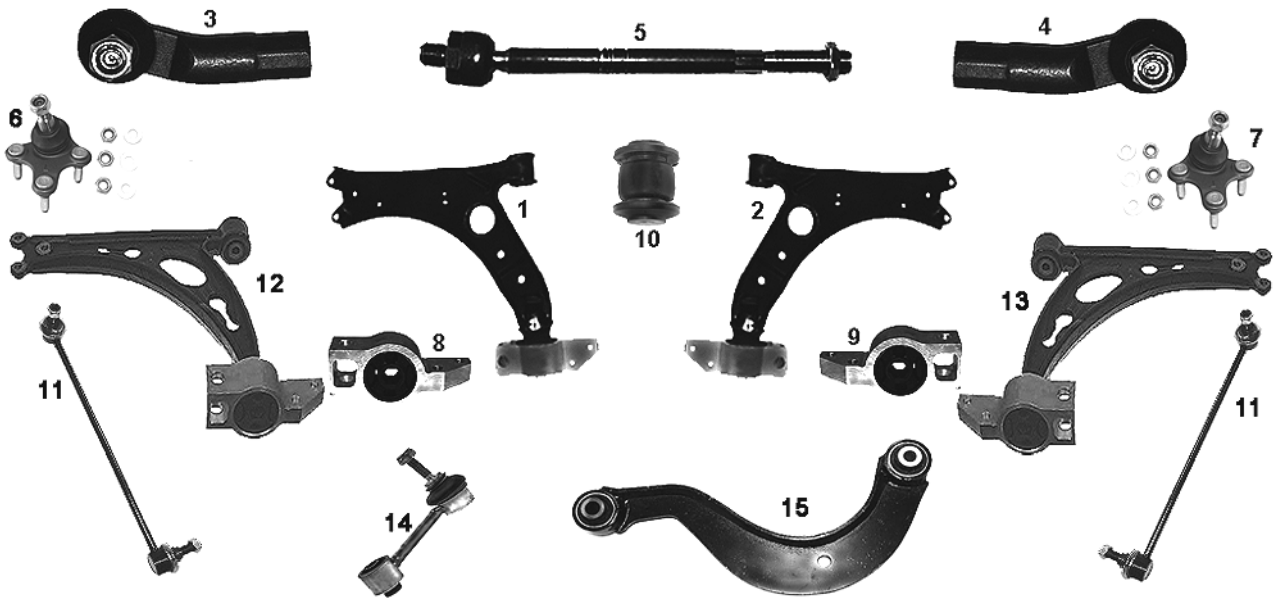

NR	MAPCO	REF								NEW	INFO
1	51715	1K0 407 151P	✓		✓			✓	✓	✓		
2	51716	1K0 407 152P	✓			✓		✓	✓	✓		
3	51826	1K0 423 811J	✓		✓				✓	✓		
4	51827	1K0 423 812J	✓			✓			✓	✓		
5	51723	1K0 423 810A	✓		✓	✓			✓	✓		M16x1,5RHT 310 mm
6	51724	1K0 407 365E	✓		✓			✓	✓	✓		**Ø 16 mm**
7	51725	1K0 407 366E	✓			✓		✓	✓	✓		**Ø 16 mm**
8	36948	1K0 199 231G	✓		✓			✓	✓	✓		
9	36949	1K0 199 232G	✓			✓		✓	✓	✓		
10	36950	1K0 407 182	✓		✓	✓		✓	✓	✓		
11	51825HPS	1K0 411 315D	✓		✓	✓		✓	✓	✓		
12	51726	1K0 407 151AC	✓		✓			✓	✓	✓		
13	51727	1K0 407 152AC	✓			✓		✓	✓	✓		
14	51829HPS	1K0 505 465C		✓	✓	✓			✓	✓		
15	52718	1K0 505 323H		✓	✓	✓	✓		✓	✓		

VOLKSWAGEN CORRADO (53I) 09/88→12/95

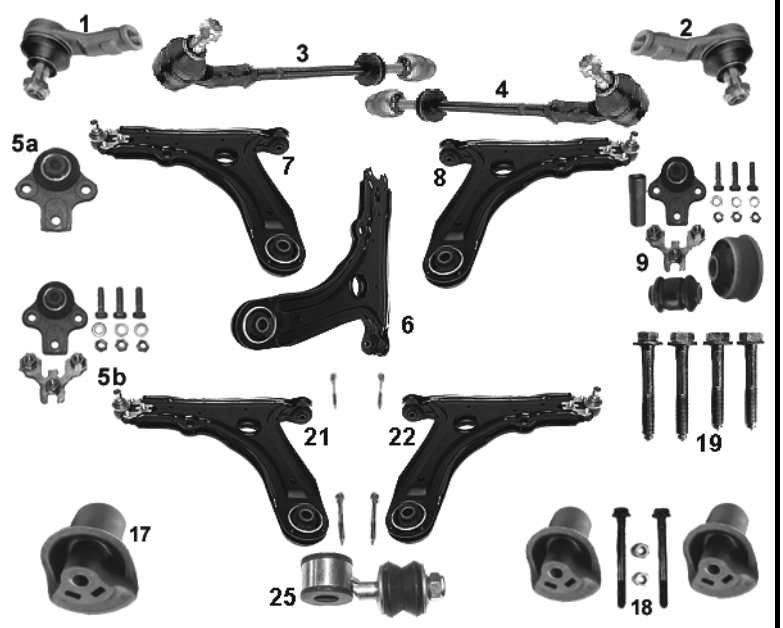

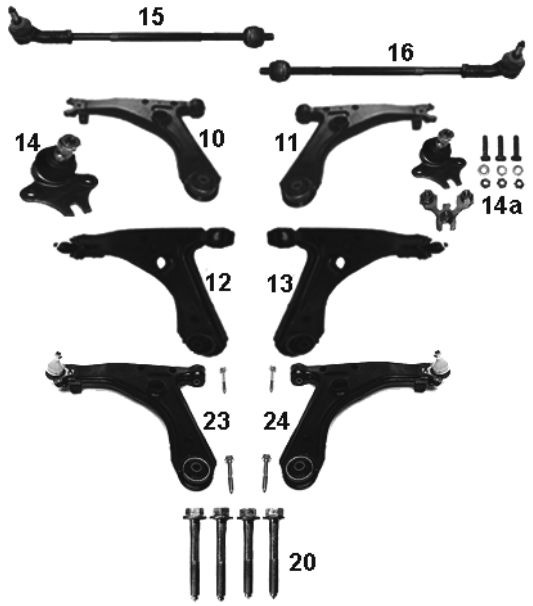

NR	MAPCO	REF								NEW	INFO
1	**19877**	191419811	✓		✓				✓	✓		M14x1,5RHT
2	**19878**	191419812	✓			✓			✓	✓		M14x1,5RHT
3	**19860**	191422803A	✓		✓				✓	✓		
4	**19861**	191422804A	✓			✓			✓	✓		
5a	**19889**	357407365A	✓		✓	✓			✓	✓		19mm
5b	**19889/1**	357407365A	✓		✓	✓			✓	✓		19mm
6	**19858**	191407153B	✓		✓	✓			✓	✓		
7	**19858/1**		✓		✓				✓	✓		**6+5b**
8	**19858/2**		✓			✓			✓	✓		**6+5b**
9	**19289**		✓		✓	✓			✓	✓		Kit
17	**33833**	191501541		✓		✓	✓		✓	✓		
18	**33833/2**	191501541S		✓		✓	✓		✓	✓		Kit
19	**95858**		✓		✓	✓			✓	✓	✓	MS
21	**19858/7**		✓		✓				✓	✓	✓	+ 6+5b
22	**19858/8**		✓			✓			✓	✓	✓	+ 6+5b
10	**49664**	1H0407151A	✓		✓				✓	✓		✓ **2.9 VR6**
11	**49665**	1H0407152	✓			✓			✓	✓		✓ **2.9 VR6**
12	**49666**		✓		✓				✓	✓		**10+14a** ✓ **2.9 VR6**
13	**49667**		✓			✓			✓	✓		**11+14a** ✓ **2.9 VR6**
14	**19679**	1H0407365	✓		✓	✓			✓	✓		16,5 mm ✓ **2.9 VR6**
14a	**19679/1**	1H0407365S	✓		✓	✓			✓	✓		16,5 mm ✓ **2.9 VR6**
15	**49873**	1H0422803A	✓		✓				✓	✓		**TRW XTR-USA** ✓ **2.9 VR6**
16	**49874**	1H0422804A	✓			✓			✓	✓		**TRW XTR-USA** ✓ **2.9 VR6**
20	**95870**		✓		✓	✓			✓	✓		MS ✓ **2.9 VR6**
23	**49666/7**		✓		✓				✓	✓		+ **10+14a** ✓ **2.9 VR6**
24	**49667/7**		✓			✓			✓	✓		+ **11+14a** ✓ **2.9 VR6**
25	**51862**	191411315A	✓		✓	✓			✓	✓	✓	Ø 18 mm

VW CRAFTER 30- 50 (2E) 04/06→

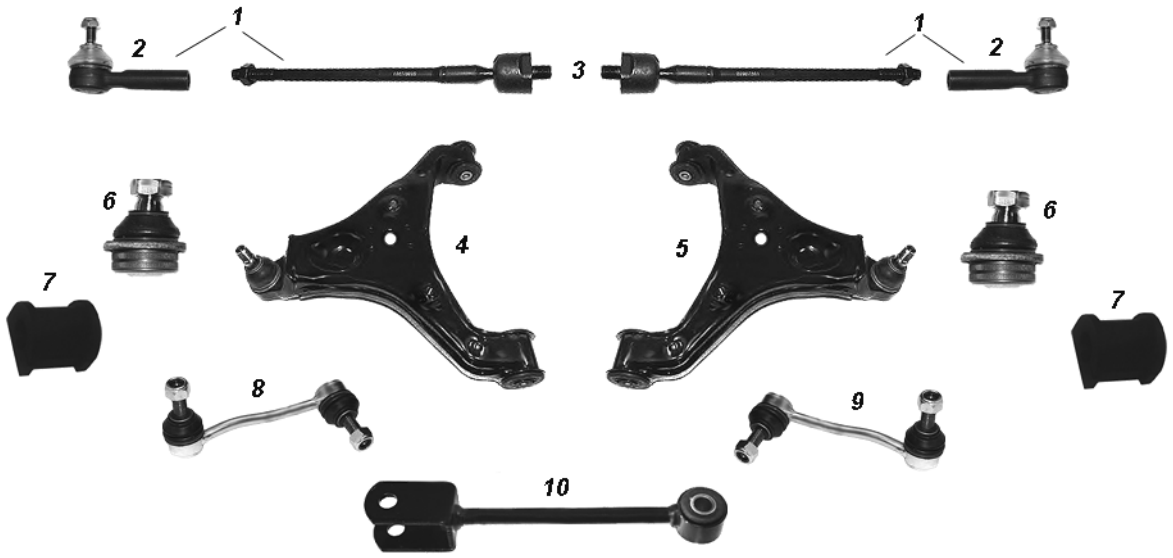

NR	MAPCO	REF								NEW	INFO
1	**52811**	2E0 713 491	✓		✓	✓			✓	✓	✓	
2	**52809**	2E0 498 104	✓		✓	✓			✓	✓	✓	
3	**52810**	2E0 713 491part	✓		✓	✓			✓	✓	✓	
4	**52816**	2E0 407 151M	✓		✓				✓	✓	✓	
5	**52817**	2E0 407 152M	✓			✓			✓	✓	✓	
6	**52812**	2E0407151M part	✓		✓	✓			✓	✓	✓	
7	**37837**	6383230285	✓		✓	✓			✓	✓	✓	innen / inner Ø 24,0 mm
8	**52813**	2E0 411 317C	✓		✓				✓	✓	✓	
9	**52814**	2E0 411 318C	✓			✓			✓	✓	✓	
10	**52815**	2E0 511 051F		✓	✓	✓			✓	✓	✓	

VOLKSWAGEN DERBY 09/76→1984

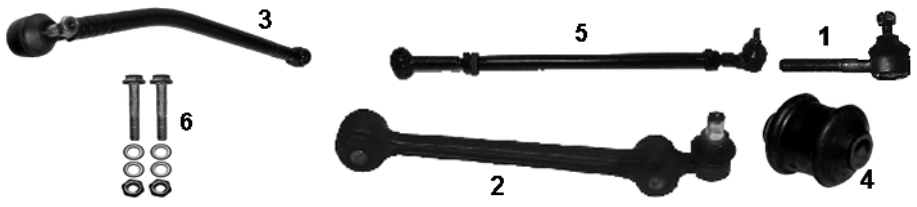

NR	MAPCO	REF								NEW	INFO
1	**19850**	811419812	✓		✓	✓			✓	✓		M14x1,5RHT
2	**19854**	861407151B	✓		✓	✓			✓	✓		10/78 →84
3	**19899**	871419801A	✓		✓	✓			✓	✓		1977→84
4	**33893**	861407183	✓		✓				✓	✓		
5	**49878**	871419802	✓		✓	✓			✓	✓		1977→84
6	**95854**		✓		✓	✓			✓	✓		MS

VOLKSWAGEN EOS 10/03→

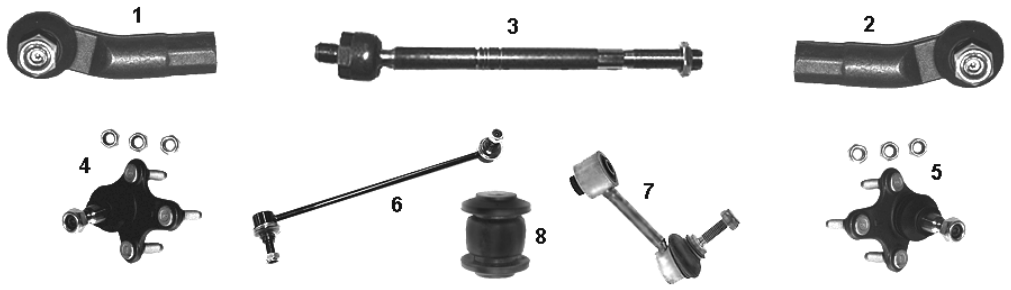

NR	MAPCO	REF								NEW	INFO
1	**51826**	1K0 423 811J	✓		✓				✓	✓	
2	**51827**	1K0 423 812J	✓			✓			✓	✓	
3	**51723**	1K0 423 810A	✓		✓	✓			✓	✓	M16x1,5RHT 310 mm
4	**51724**	1K0 407 365E	✓		✓			✓	✓	✓	16,00 mm
5	**51725**	1K0 407 366E	✓			✓		✓	✓	✓	16,00 mm
6	**51825HPS**	1K0 411 315D	✓		✓	✓		✓	✓	✓	
7	**51829HPS**	1K0 505 465C		✓	✓	✓			✓	✓	
8	**36950**	1K0 407 182	✓		✓	✓		✓	✓	✓	

VOLKSWAGEN FOX (5Z1) 10/03→

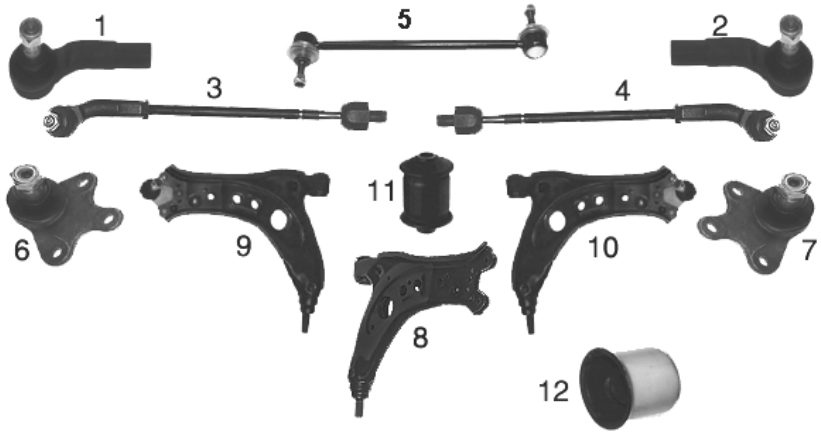

NR	MAPCO	REF								NEW	INFO
1	**59806**	6Q0423811	✓		✓				✓	✓	
2	**59807**	6Q0423812	✓			✓			✓	✓	
3	**59808**	6Q0423803B	✓		✓				✓	✓	**M14x1,5**
4	**59809**	6Q0423804B	✓			✓			✓	✓	**M14x1,5**
5	**59812HPS**	6Q0411315C	✓		✓	✓			✓	✓	
6	**59810**	6Q0407365A	✓		✓				✓	✓	
7	**59811**	6Q0407366A	✓			✓			✓	✓	
8	**59813**	6Q0407151D	✓		✓	✓			✓	✓	
9	**59813/1**		✓			✓			✓	✓	**6 + 8**
10	**59813/2**		✓			✓			✓	✓	**7 + 8**
11	**36938**	6Q0407182A	✓		✓	✓			✓	✓	
12	**36939**	6Q0407183	✓		✓	✓			✓	✓	

VOLKSWAGEN	GOLF I	08/74→08/83
	JETTA I	08/79→08/83
	SCIROCCO (53)	02/74→07/80

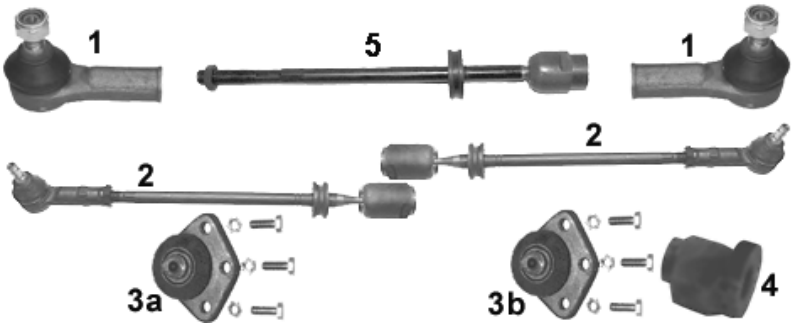

NR	MAPCO	REF								NEW	INFO
1	**19874**	171419812	✓		✓	✓			✓	✓		M14x1,5RHT
2	**19891**	171419804	✓		✓	✓			✓	✓		
3a	**19875**	171407365	✓		✓	✓			✓	✓		→10/77
3b	**19876**	171407365G	✓		✓	✓			✓	✓		11/77→
4	**33820**	171407181A	✓		✓	✓			✓	✓		
5	**19891/1**	171419821	✓		✓	✓			✓	✓		

VERGLEICHSNUMMERN DIENEN NUR ZUR BESSEREN IDENTIFIKATION UND DÜRFEN NICHT AUF RECHNUNGEN ERSCHEINEN!!!
Reference numbers are used for better identification only !
Références d´origine pour meilleure identification seulement !

VOLKSWAGEN GOLF II
VOLKSWAGEN JETTA II

09/83→10/91

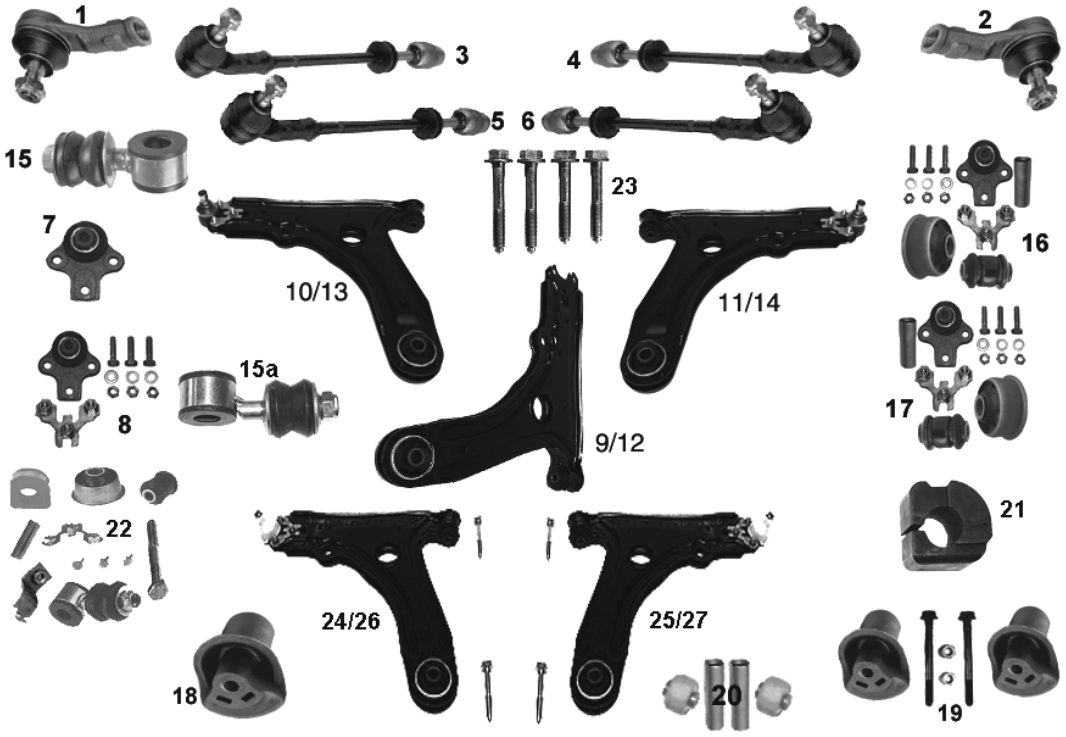

NR	MAPCO	REF								NEW	INFO
1	**19877**	191419811	✓		✓				✓	✓		M14x1,5RHT
2	**19878**	191419812	✓			✓			✓	✓		M14x1,5RHT
3	**19892**	191419803	✓		✓					✓		
4	**19888**	191419804	✓			✓				✓		
5	**19860**	191422803A	✓		✓				✓			
6	**19861**	191422804A	✓			✓			✓			
7	**19879**	191407365	✓		✓	✓			✓	✓		→07/87 **Ø 17 mm**
7	**19889**	357407365	✓		✓	✓			✓	✓		08/87→ **Ø 19 mm**
8	**19879/1**	191407365	✓		✓	✓			✓	✓		→07/87 **Ø 17 mm**
8	**19889/1**	357407365	✓		✓	✓			✓	✓		08/87→ **Ø 19 mm**
9	**19855**	191407153B	✓		✓	✓			✓	✓		→07/87
10	**19855/1**		✓		✓				✓	✓		→07/87 **Ø 17 mm**
11	**19855/2**		✓			✓			✓	✓		→07/87 **Ø 17 mm**
12	**19858**	191407153B	✓		✓	✓			✓	✓		08/87→
13	**19858/1**		✓		✓				✓	✓		08/87→ **Ø 19 mm**
14	**19858/2**		✓			✓			✓	✓		08/87→ **Ø 19 mm**
15	**49850**	191411315B	✓		✓	✓			✓	✓		
15a	**51862**	191411315A	✓		✓	✓			✓	✓	✓	**Ø 18 mm**
16	**19279**		✓		✓	✓			✓	✓		→07/87 **Ø 17 mm** Kit
17	**19289**		✓		✓	✓			✓	✓		08/87→ **Ø 19 mm** Kit
18	**33833**	191501541		✓		✓	✓		✓	✓		
19	**33833/2**	191501541S		✓		✓	✓		✓	✓		
20	**33818/2**		✓		✓	✓			✓	✓		**Kit**
21	**33904**	191411314	✓		✓	✓			✓	✓		**Ø 17 mm**
22	**33890**		✓		✓	✓			✓	✓		
23	**95858**		✓		✓	✓			✓	✓		MS
24	**19855/7**		✓		✓				✓	✓		+ →07/87 **Ø 17 mm**
25	**19855/8**		✓			✓			✓	✓		+ →07/87 **Ø 17 mm**
26	**19858/7**		✓		✓				✓	✓		+ 08/87→ **Ø 19 mm**
27	**19858/8**		✓			✓			✓	✓		+ 08/87→ **Ø 19 mm**

VOLKSWAGEN GOLF III - JETTA II
VOLKSWAGEN VENTO

11/91→1997

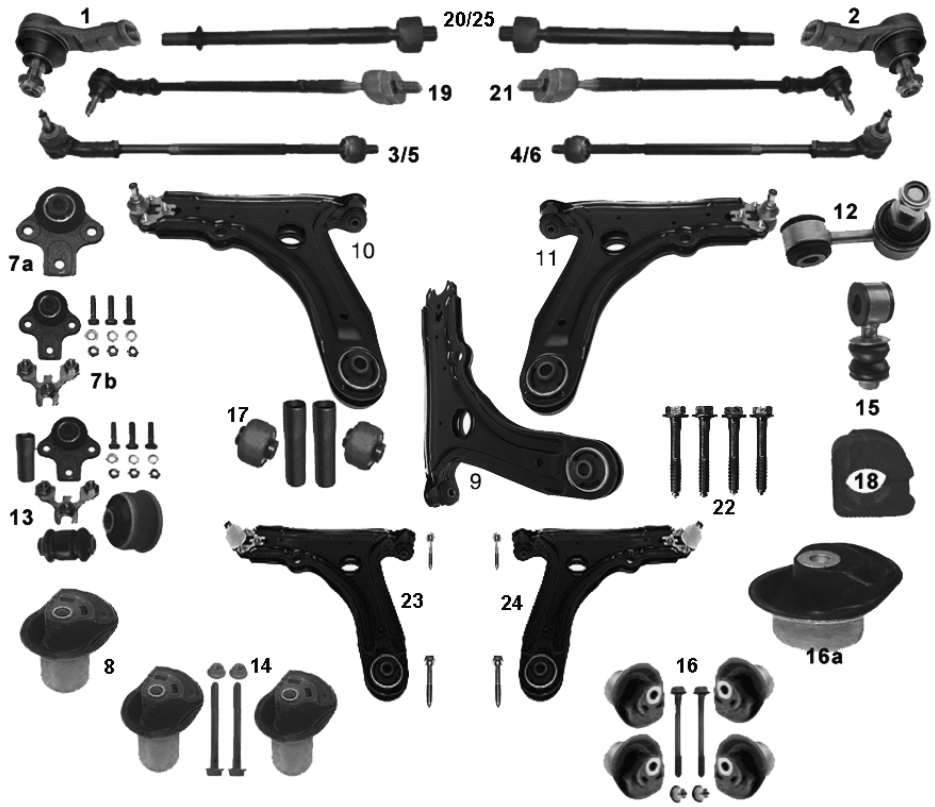

NR	MAPCO	REF								NEW	INFO
1	**19877**	191419811	✓		✓				✓	✓		M14x1,5RHT
2	**19878**	191419812	✓			✓			✓	✓		M14x1,5RHT
3	**19862**	1H0419803	✓		✓					✓		1 + 25
4	**19863**	1H0419804	✓			✓				✓		2 + 25
5	**19864**	1H0422803	✓		✓				✓			**TRW STOP MOTOR AAA, ABF, ABV, ADY, 2E**
6	**19865**	1H0422804	✓			✓			✓			**TRW STOP MOTOR AAA, ABF, ABV, ADY, 2E**
7A	**19889**	357407365	✓		✓	✓			✓	✓		**Ø 19 mm**
7B	**19889/1**	357407365	✓		✓	✓			✓	✓		**Ø 19 mm**
8	**33858**	1H0501541A		✓	✓	✓			✓	✓		
9	**19870**	1H0407151	✓		✓	✓			✓	✓		
10	**19870/1**		✓		✓				✓	✓		**Ø 19 mm**
11	**19870/2**		✓			✓			✓	✓		**Ø 19 mm**
12	**19853HPS**	535411315	✓		✓	✓			✓	✓		✓2.0 16V – 2.8 VR6
13	**19289**		✓		✓	✓			✓	✓		Kit
14	**33858/2**	1H0501541AS		✓	✓	✓			✓	✓		
15	**49850**		✓		✓	✓			✓	✓		STOP 2.0 16V-2.8 VR6
16	**33909/4**	191411315B		✓	✓	✓			✓	✓		
16a	**33909**	1H9501541		✓	✓	✓			✓	✓		
17	**33818/2**		✓		✓	✓			✓	✓		**Kit**
18	**33905**	1H0411314	✓		✓	✓			✓	✓		19 mm
19	**49672**	1H0422803B	✓		✓				✓	✓		**ZF**
20	**49672/1**		✓		✓	✓			✓	✓		**ZF**
21	**49673**	1H0422804B	✓			✓			✓	✓		**ZF**
22	**95870**		✓		✓	✓			✓	✓		MS
23	**19870/7**		✓		✓				✓	✓		**+ Ø 19 mm**
24	**19870/8**		✓			✓			✓	✓		**+ Ø 19 mm**
25	**52719**	1H0419821A	✓		✓	✓			✓	✓	✓	

VOLKSWAGEN	GOLF III 2.0, 2.0 Gti 16V,2.8 VR6, 2.9 VR6 Syncro +	11/91→ 08/97
	VENTO 2.0, 2.8 VR6	01/92→ 09/98

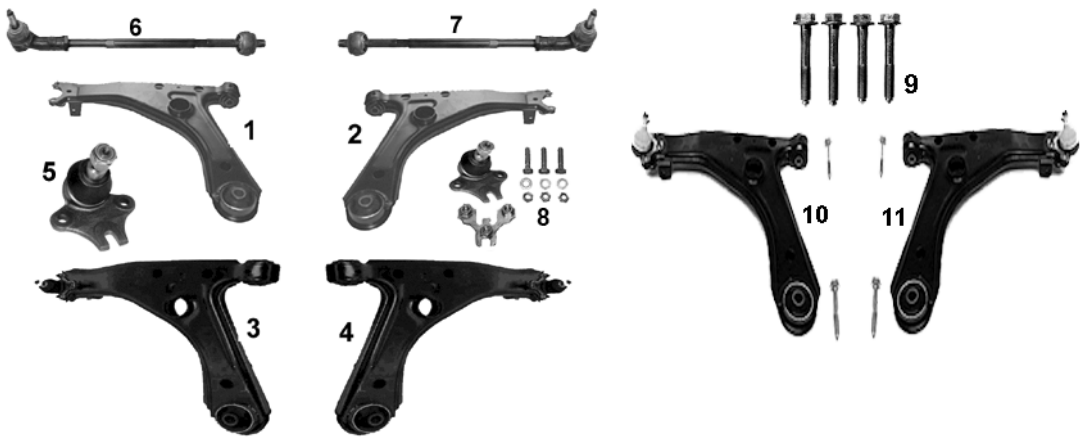

NR	MAPCO	REF								NEW	INFO
1	**49664**	1H0407151A	✓		✓				✓	✓		
2	**49665**	1H0407152	✓			✓			✓	✓		
3	**49666**		✓		✓					✓		
4	**49667**		✓			✓				✓		
5	**19679**	1H0407365	✓		✓	✓			✓	✓		16,5 mm
6	**49873**	1H0422803A	✓		✓				✓	✓		**TRW XTR-USA**
7	**49874**	1H0422804A	✓			✓			✓	✓		**TRW XTR-USA**
8	**19679/1**	1H0407365S	✓		✓	✓			✓	✓		16,5 mm
9	**95870**		✓		✓	✓			✓	✓		MS
10	**49666/7**		✓		✓					✓		+
11	**49667/7**		✓			✓				✓		+

siehe/ see → Golf III

VERGLEICHSNUMMERN DIENEN NUR ZUR BESSEREN IDENTIFIKATION UND DÜRFEN NICHT AUF RECHNUNGEN ERSCHEINEN!!!
Reference numbers are used for better identification only !
Références d'origine pour meilleure identification seulement !

VOLKSWAGEN GOLF IV + Variant 08/97→06/05

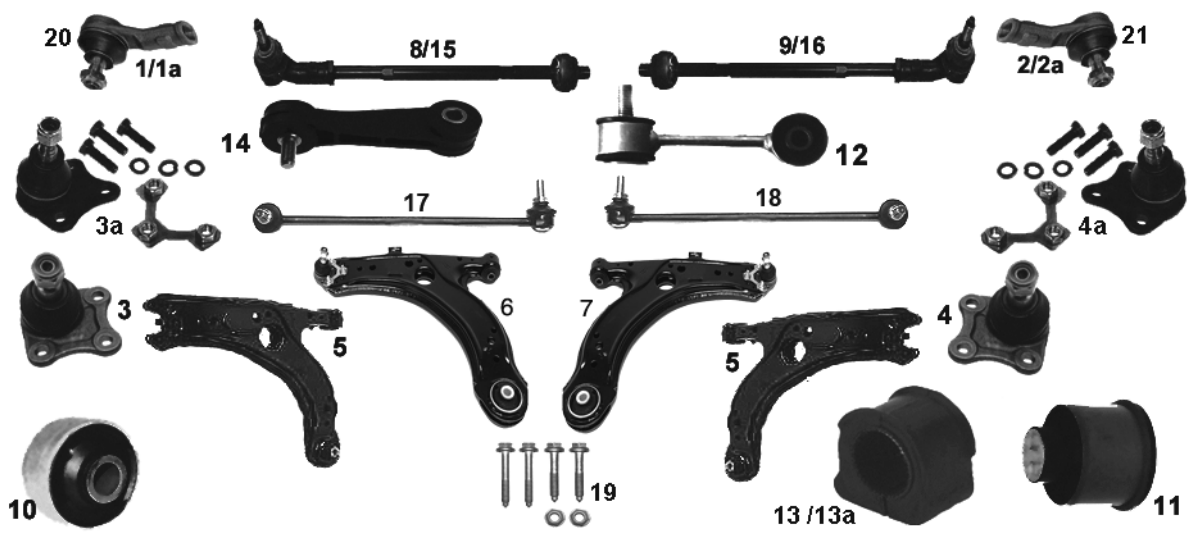

NR	MAPCO	REF								NEW	INFO
1	**49700**	1J0 422 811B	✓		✓				✓	✓	94mm M14x1,5RHT, Chassis WP050833→
1a	**59895**	1J0 422 811A	✓		✓				✓	✓	75mm M14x1,5RHT, Chassis →WP050832
2	**49701**	1J0 422 812B	✓			✓			✓	✓	94mm M14x1,5RHT, Chassis WP050833→
2a	**59896**	1J0 422 812A	✓			✓			✓	✓	75mm M14x1,5RHT, Chassis →WP050832
3	**49702**	1J0 407 365C	✓		✓				✓	✓	
3a	**49702/1**	1J0 407 365A	✓		✓				✓	✓	
4	**49703**	1J0 407 366C	✓			✓			✓	✓	
4a	**49703/1**	1J0 407 366A	✓			✓			✓	✓	
5	**49704**	1J0 407 151B	✓		✓	✓			✓	✓	
6	**49704/1**		✓		✓				✓	✓	**5+3a**
7	**49704/2**		✓			✓			✓	✓	**5+4a**
8	**49690**	1J0 422 803B	✓		✓				✓	✓	Chassis WP050833→
9	**49691**	1J0 422 804B	✓			✓			✓	✓	Chassis WP050833→
10	**33903**	1J0 407 181	✓		✓	✓			✓	✓	STOP 3.2 R32, RSI 3.2
10	**36772**	8N0 407 181B	✓		✓	✓			✓	✓	✓ 3.2 R32, RSI 3.2
11	**33912**	1J0 501 541C		✓	✓	✓			✓	✓	
12	**49867**	1J0 411 315C	✓		✓	✓			✓	✓	Stahl/steel 105mm, Ø 23mm
13	**33927**	1J0 411 314B	✓		✓	✓			✓	✓	Innen/ inner Ø 19mm
13a	**33824**	1J0 411 314G	✓		✓	✓			✓	✓	Innen/ inner Ø 23mm
14	**49868**	1J0 411 315C	✓		✓	✓			✓	✓	Plastik 105mm Ø 21mm
15	**49869**	1J0 422 803A	✓		✓				✓	✓	Chassis→WP050832
16	**49870**	1J0 422 804A	✓			✓			✓	✓	Chassis→WP050832
17	**59852HPS**	68510 017	✓		✓				✓	✓	
18	**59853HPS**	68510 018	✓			✓			✓	✓	
19	**95704**		✓		✓	✓			✓	✓	MS
20	**51711**	8N0 422 811A	✓		✓				✓		16x1,5RHT ✓3.2 R32 4motion
21	**51712**	8N0 422 812A	✓			✓			✓		16x1,5RHT ✓3.2 R32 4motion

VOLKSWAGEN GOLF V (1K1) 10/03→

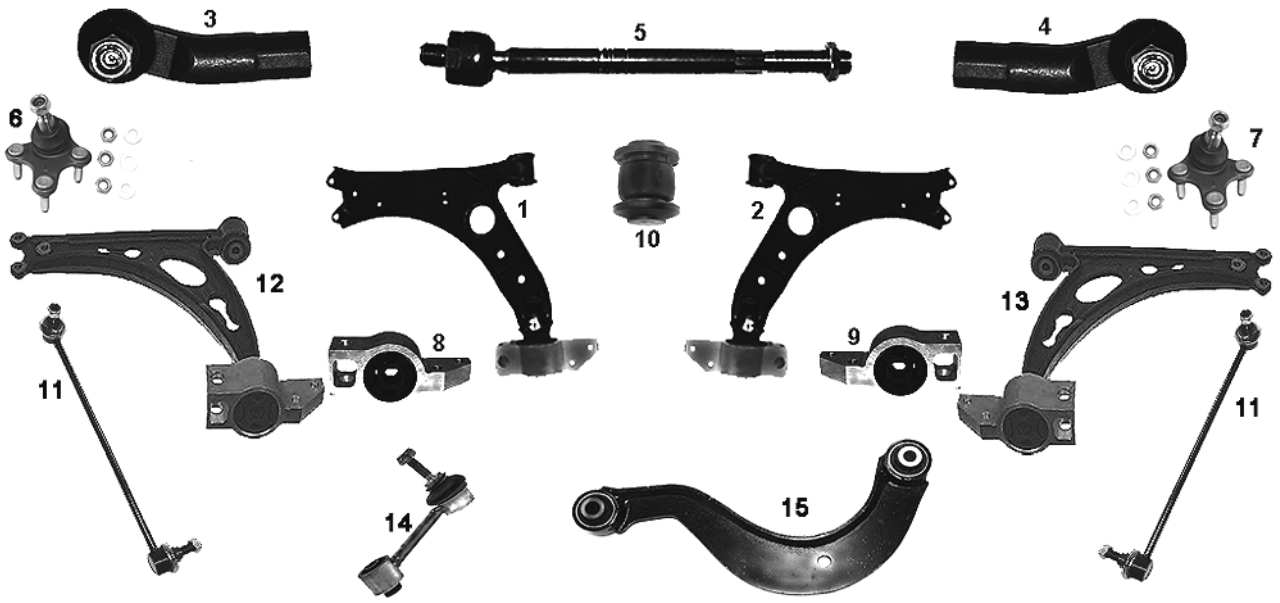

NR	MAPCO	REF								NEW	INFO
1	**51715**	1K0 407 151P	✓		✓			✓	✓	✓		
2	**51716**	1K0 407 152P	✓			✓		✓	✓	✓		
3	**51826**	1K0 423 811J	✓		✓				✓	✓		
4	**51827**	1K0 423 812J	✓			✓			✓	✓		
5	**51723**	1K0 423 810A	✓		✓	✓			✓	✓		M16x1,5RHT 310 mm
6	**51724**	1K0 407 365E	✓		✓			✓	✓	✓		**Ø 16 mm**
7	**51725**	1K0 407 366E	✓			✓		✓	✓	✓		**Ø 16 mm**
8	**36948**	1K0 199 231G	✓		✓			✓	✓	✓		
9	**36949**	1K0 199 232G	✓			✓		✓	✓	✓		
10	**36950**	1K0 407 182	✓		✓	✓		✓	✓	✓		
11	**51825HPS**	1K0 411 315D	✓		✓	✓		✓	✓	✓		
12	**51726**	1K0 407 151AC	✓		✓			✓	✓	✓		
13	**51727**	1K0 407 152AC	✓			✓		✓	✓	✓		
14	**51829HPS**	1K0 505 465C		✓	✓	✓			✓	✓		
15	**52718**	1K0 505 323H		✓	✓	✓	✓		✓	✓		

VOLKSWAGEN GOLF V PLUS (1KP) 01/05→

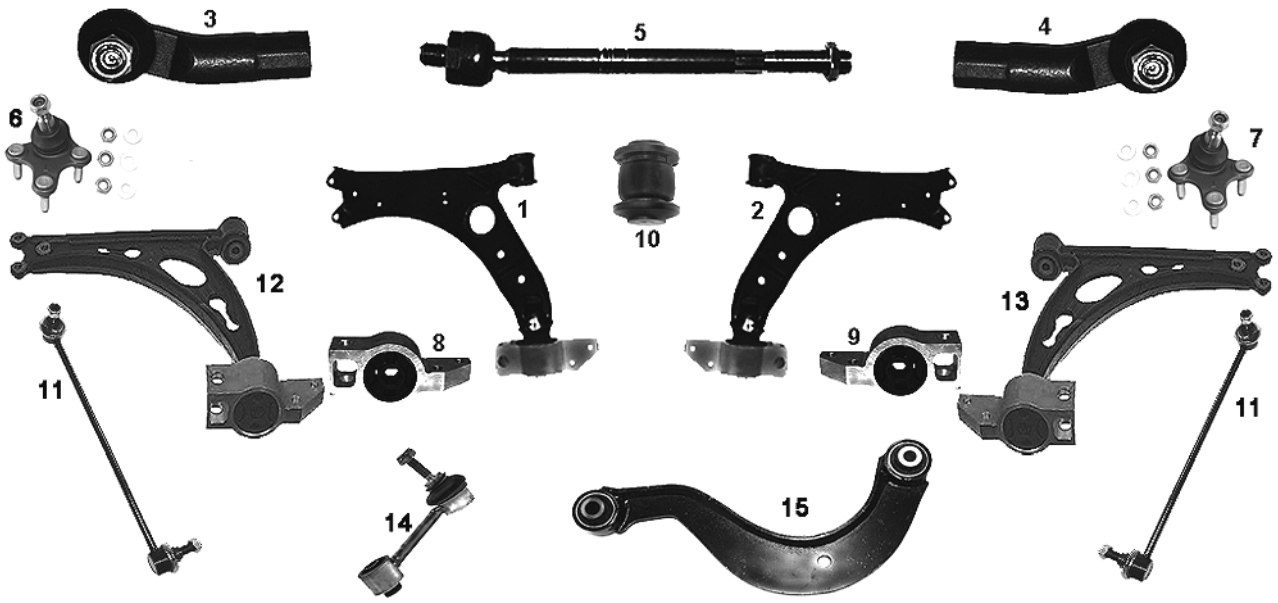

NR	MAPCO	REF								NEW	INFO
1	51715	1K0 407 151P	✓		✓			✓	✓	✓		
2	51716	1K0 407 152P	✓			✓		✓	✓	✓		
3	51826	1K0 423 811J	✓		✓				✓	✓		
4	51827	1K0 423 812J	✓			✓			✓	✓		
5	51723	1K0 423 810A	✓		✓	✓			✓	✓		M16x1,5RHT 310 mm
6	51724	1K0 407 365E	✓		✓			✓	✓	✓		**Ø 16 mm**
7	51725	1K0 407 366E	✓			✓		✓	✓	✓		**Ø 16 mm**
8	36948	1K0 199 231G	✓		✓			✓	✓	✓		
9	36949	1K0 199 232G	✓			✓		✓	✓	✓		
10	36950	1K0 407 182	✓		✓	✓		✓	✓	✓		
11	51825HPS	1K0 411 315D	✓		✓	✓		✓	✓	✓		
12	51726	1K0 407 151AC	✓		✓			✓	✓	✓		
13	51727	1K0 407 152AC	✓			✓		✓	✓	✓		
14	51829HPS	1K0 505 465C		✓	✓	✓			✓	✓		
15	52718	1K0 505 323H		✓	✓	✓	✓		✓	✓		

Volkswagen JETTA III (1KM) 08/05→

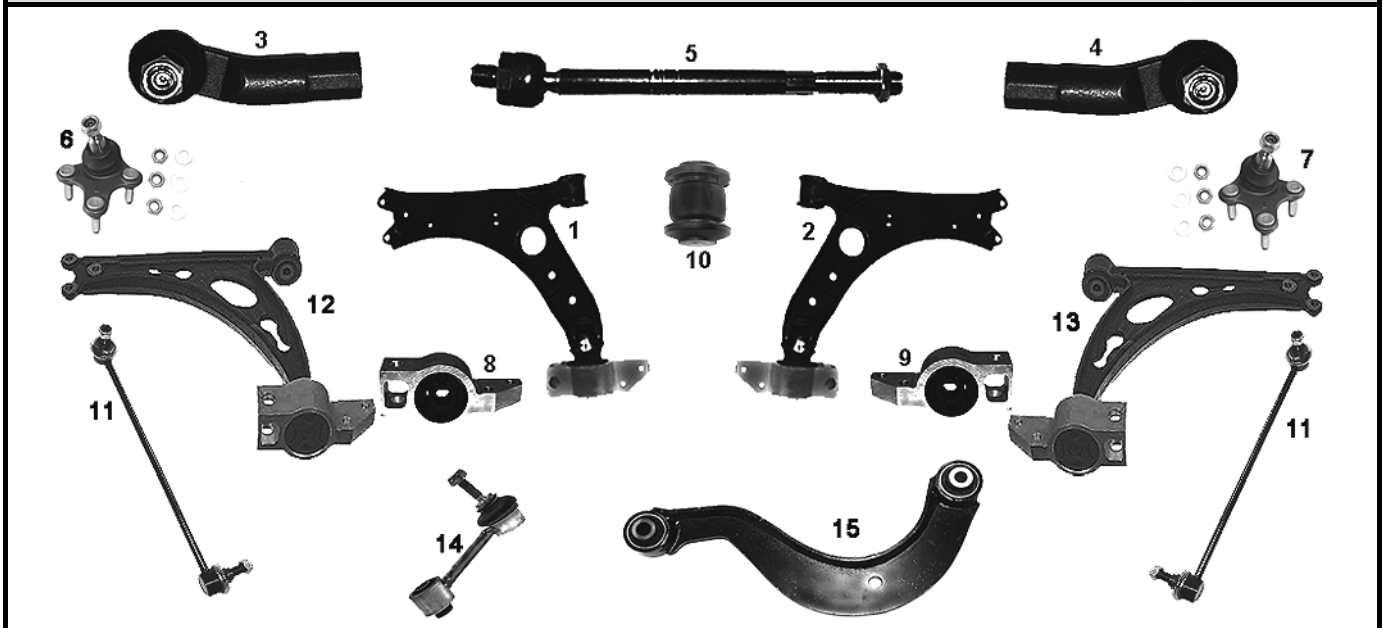

NR	MAPCO	REF								NEW	INFO
1	**51715**	1K0 407 151P	✓		✓			✓	✓	✓		
2	**51716**	1K0 407 152P	✓			✓		✓	✓	✓		
3	**51826**	1K0 423 811J	✓		✓				✓	✓		
4	**51827**	1K0 423 812J	✓			✓			✓	✓		
5	**51723**	1K0 423 810A	✓		✓	✓			✓	✓		M16x1,5RHT 310 mm
6	**51724**	1K0 407 365E	✓		✓			✓	✓	✓		**Ø 16 mm**
7	**51725**	1K0 407 366E	✓			✓		✓	✓	✓		**Ø 16 mm**
8	**36948**	1K0 199 231G	✓		✓			✓	✓	✓		
9	**36949**	1K0 199 232G	✓			✓		✓	✓	✓		
10	**36950**	1K0 407 182	✓		✓	✓		✓	✓	✓		
11	**51825HPS**	1K0 411 315D	✓		✓	✓		✓	✓	✓		
12	**51726**	1K0 407 151AC	✓		✓			✓	✓	✓		
13	**51727**	1K0 407 152AC	✓			✓		✓	✓	✓		
14	**51829HPS**	1K0 505 465C		✓	✓	✓			✓	✓		
15	**52718**	1K0 505 323H		✓	✓	✓	✓		✓	✓		

VOLKSWAGEN KAEFER 01/60→12/85

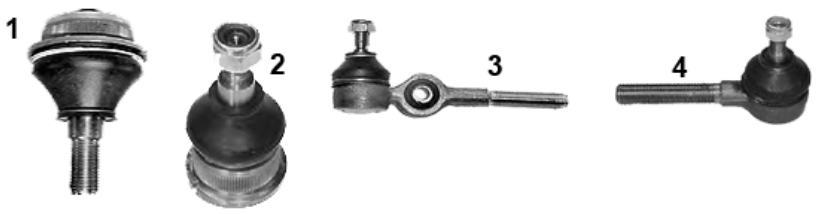

NR	MAPCO	REF								NEW	INFO
1	**51800**	131405361E	✓		✓	✓	✓		✓	✓		Ø 16 mm
2	**51801**	131405371G	✓		✓	✓		✓	✓	✓		Ø 15 mm
3	**51807**	131415813D	✓			✓			✓	✓		innen/inner M14x1,5 LHT
4	**51810**	113415821	✓		✓	✓			✓	✓		innen/inner M14x1,5RHT

VOLKSWAGEN LUPO 09/98→

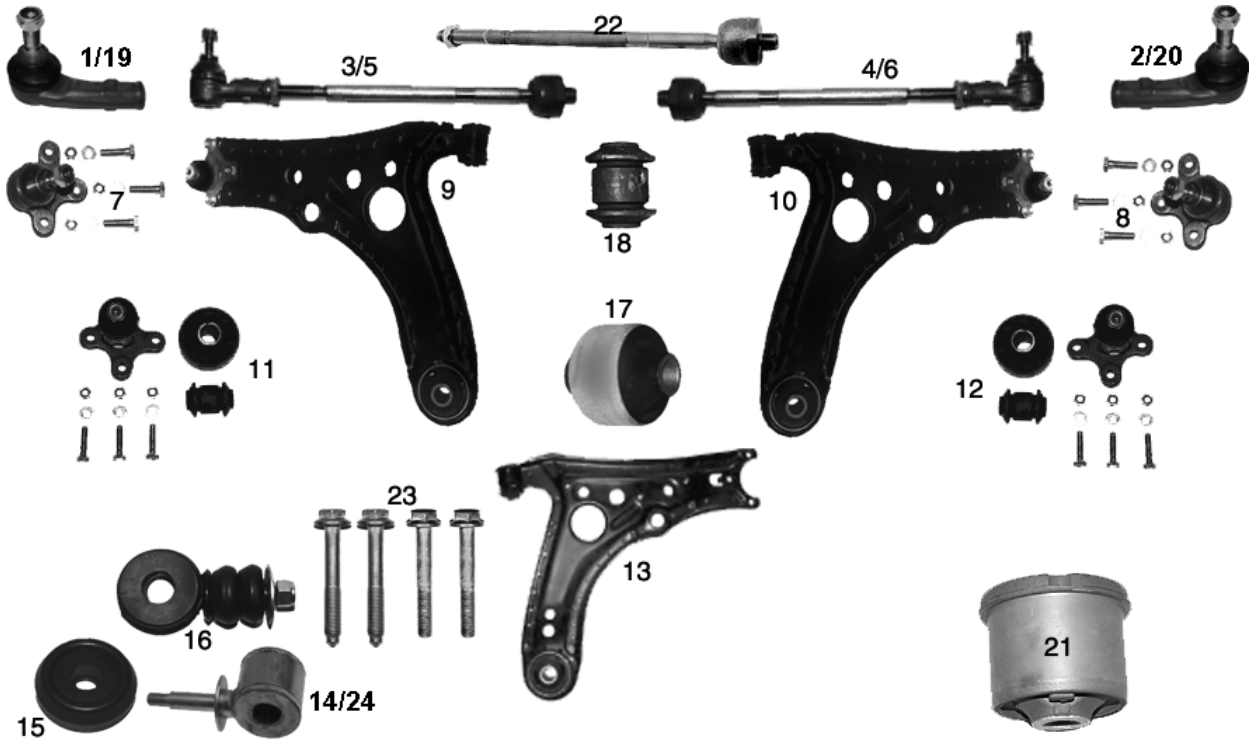

NR	MAPCO	REF								NEW	INFO
1	**19885**	6N0419811	✓		✓					✓		M14 x 1,5 RHT
2	**19886**	6N0419812	✓			✓				✓		M14 x 1,5 RHT
3	**19688**	6N0419803	✓		✓					✓		
4	**19689**	6N0419804	✓			✓				✓		
5	**59890**	6X0422803A	✓		✓				✓			
6	**59889**	6X0422804A	✓			✓			✓			
7	**19895**	6N0407365	✓		✓				✓	✓		
8	**19896**	6N0407365A	✓			✓			✓	✓		
9	**51819**	6X0407151A	✓		✓				✓	✓		**7+13**
10	**51820**	6X0407151A	✓			✓			✓	✓		**8+13**
11	**19295**		✓		✓				✓	✓		Kit
12	**19296**		✓			✓			✓	✓		Kit
13	**51819/1**	6X0407151A	✓		✓	✓			✓	✓		
14	**49862**	6N0411315	✓		✓	✓			✓	✓		
15	**49862/9**	6N0411329	✓		✓	✓			✓	✓		
16	**49862/1**		✓		✓	✓			✓	✓		**14 + 15**
17	**33835**	6N0407181	✓		✓	✓			✓	✓		
18	**33834**	6N0407182	✓		✓	✓			✓	✓		
19	**51822**	6X0422811	✓		✓				✓			M14x1,5 RHT
20	**51823**	6X0422812	✓			✓			✓			M14x1,5 RHT
21	**33937**	6N0501541D		✓	✓	✓			✓	✓		
22	**19696/1**	6N0422821A	✓		✓	✓			✓			
23	**95686**		✓		✓	✓			✓	✓		MS
24	**51821**	6N0411315A	✓		✓	✓			✓	✓		✓1.4 16V 09/98→, Ø Innen/ inner 20,0mm

VOLKSWAGEN NEW BEETLE 01/98→

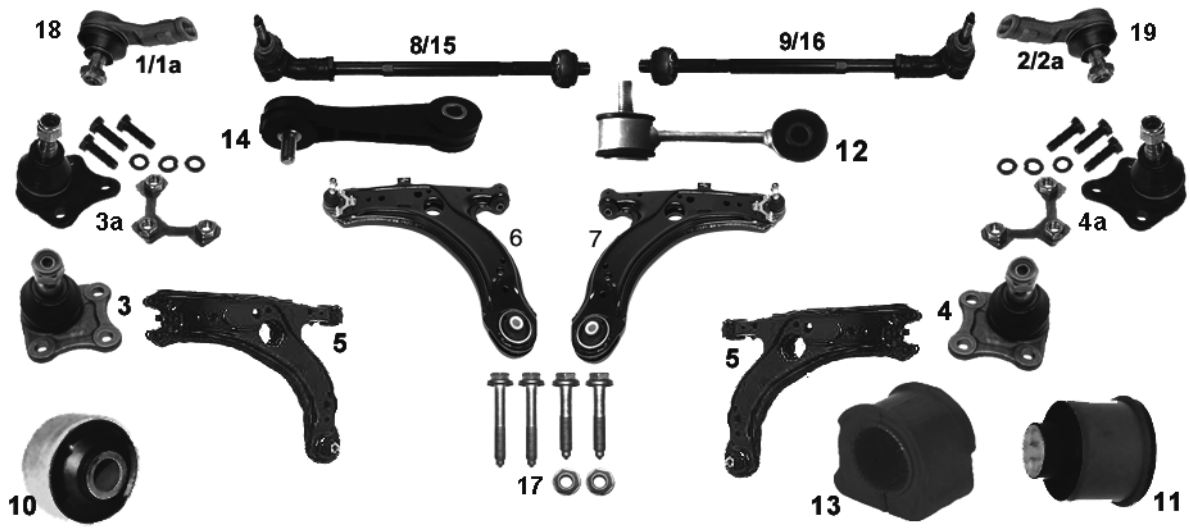

NR	MAPCO	REF								NEW	INFO
1	**49700**	1J0 422 811B	✓		✓				✓	✓		94mm M14x1,5RHT, Chassis WP050833→
1a	**59895**	1J0 422 811A	✓		✓				✓	✓		75mm M14x1,5RHT, Chassis →WP050832
2	**49701**	1J0 422 812B	✓			✓			✓	✓		94mm M14x1,5RHT, Chassis WP050833→
2a	**59896**	1J0 422 812A	✓			✓			✓	✓		75mm M14x1,5RHT, Chassis →WP050832
3	**49702**	1J0 407 365C	✓		✓				✓	✓		
3a	**49702/1**	1J0 407 365A	✓		✓				✓	✓		
4	**49703**	1J0 407 366C	✓			✓			✓	✓		
4a	**49703/1**	1J0 407 366A	✓			✓			✓	✓		
5	**49704**	1J0 407 151B	✓		✓	✓			✓	✓		
6	**49704/1**		✓		✓				✓	✓		**5+3a**
7	**49704/2**		✓			✓			✓	✓		**5+4a**
8	**49690**	1J0 422 803B	✓		✓				✓	✓		Chassis WP050833→
9	**49691**	1J0 422 804B	✓			✓			✓	✓		Chassis WP050833→
10	**33903**	1J0 407 181	✓		✓	✓			✓	✓		
11	**33912**	1J0 501 541C		✓	✓	✓			✓	✓		
12	**49867**	1J0 411 315C	✓		✓	✓			✓	✓		Stahl/steel 105mm, Ø 23mm
13	**33927**	1J0 411 314B	✓		✓	✓			✓	✓		Innen Ø 19mm
14	**49868**	1J0 411 315C	✓		✓	✓			✓	✓		Plastik 105mm Ø 21mm
15	**49869**	1J0 422 803A	✓		✓				✓	✓		Chassis→WP050832
16	**49870**	1J0 422 804A	✓			✓			✓	✓		Chassis→WP050832
17	**95704**		✓		✓	✓			✓	✓		MS
18	**51711**	8N0 422 811A	✓		✓				✓			16x1,5RHT✓ RSI 3.2
19	**51712**	8N0 422 812A	✓			✓			✓			16x1,5RHT✓ RSI 3.2

VOLKSWAGEN PASSAT - SANTANA - DASHER (USA) 05/73→07/81

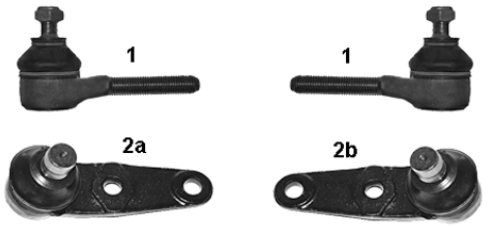

NR	MAPCO	REF								NEW	INFO
1	**19850**	811419812	✓		✓	✓				✓		M14x1,5RHT
2a	**19856**	823407365A	✓		✓	✓				✓		**Ø 15 mm** →08/77
2b	**19857**	823407365E	✓		✓	✓				✓		**Ø 17 mm** 09/77→

VOLKSWAGEN PASSAT - SANTANA 08/81→03/88
VOLKSWAGEN PASSAT SYNCRO (4WD) 08/84→03/88

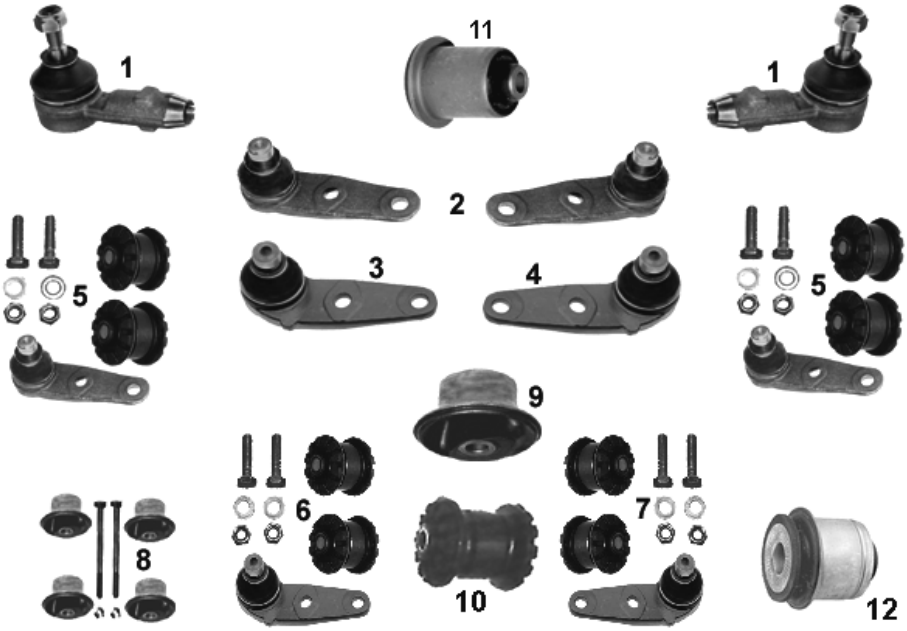

NR	MAPCO	REF								NEW	INFO
1	**19890**	811419812A	✓		✓				✓	✓		M14x1,5RHT
2	**19857**	823407365E	✓		✓	✓				✓		**Ø 17 mm**
3	**19893**	855407365A	✓		✓				✓			**Ø 17 mm**
4	**19894**	855407366A	✓			✓			✓			**Ø 17 mm**
5	**19257**		✓		✓	✓				✓		Kit
6	**19293**		✓		✓				✓			Kit
7	**19294**		✓			✓			✓			Kit
8	**33826/4**			✓	✓	✓			✓	✓		
9	**33826**	321501541		✓	✓	✓			✓	✓		
10	**33828**	811407181A	✓		✓	✓			✓	✓		
11	**33813**	857407181	✓		✓	✓		✓	✓	✓		
12	**33827**	893199419	✓		✓	✓			✓	✓		

VOLKSWAGEN PASSAT (_35I) - PASSAT SYNCRO (4WD) 04/88→05/97

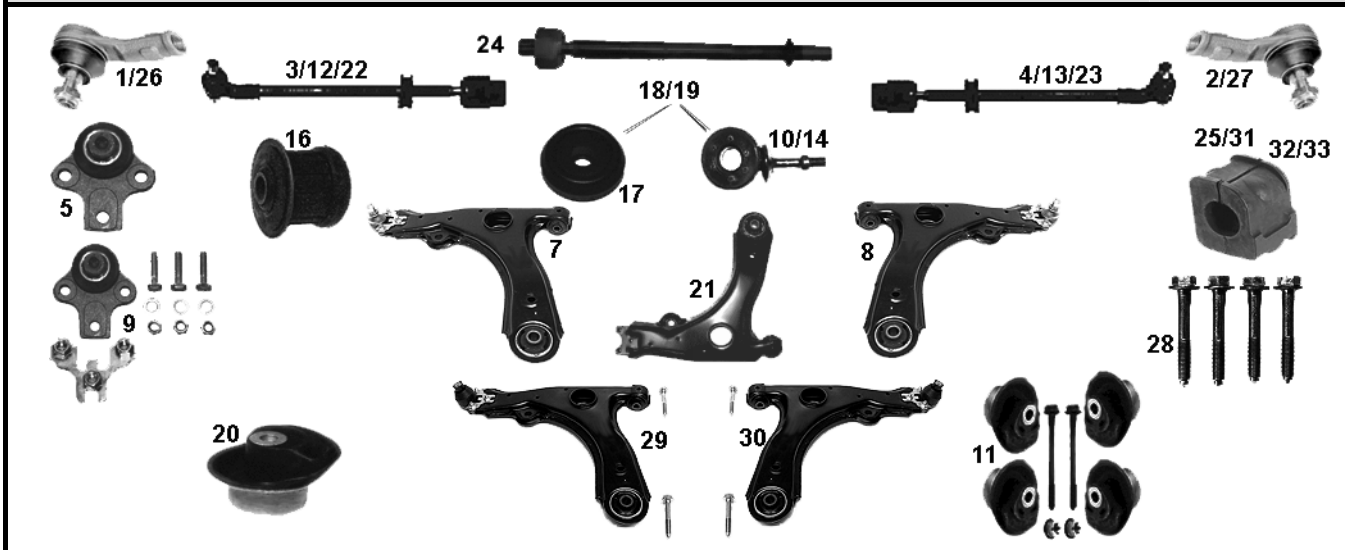

NR	MAPCO	REF								NEW	INFO
1	**19877**	191419811	✓		✓				✓	✓	M14x1,5RHT
2	**19878**	191419812	✓			✓			✓	✓	M14x1,5RHT
3	**19871**	357419803	✓		✓					✓	
3	**19682**	357422803	✓		✓				✓		**TRW** Chassis →3AR099264
4	**19872**	357419804	✓			✓				✓	
4	**19683**	357422804	✓			✓			✓		**TRW** Chassis →3AR099264
5	**19889**	357407365	✓		✓	✓			✓	✓	Chassis → 31N255989
7	**19690**	357407151	✓		✓				✓	✓	Chassis → 31N255989
8	**19691**	357407151	✓			✓			✓	✓	Chassis → 31N255989
9	**19889/1**	357407365	✓		✓	✓			✓	✓	**Ø 19 mm** Chassis → 31N255989
10	**49860**	357411315D	✓		✓	✓			✓	✓	**Ø =21mm** 08/93→1997
11	**33871/4**	3A0501541S		✓	✓	✓			✓	✓	STOP **synchro**
12	**49692**	3A0422803C	✓		✓				✓	✓	Chassis 3AR099265 →
13	**49693**	3A0422804C	✓			✓			✓	✓	Chassis 3AR099265 →
14	**49865**	357411315C	✓		✓	✓			✓	✓	**Ø 19mm** 1988→7/93
16	**33830**	893199415	✓		✓	✓			✓	✓	
17	**49860/9**	357411329	✓		✓	✓			✓	✓	
18	**49860/1**	357411315D	✓		✓	✓			✓	✓	**10 + 17**
19	**49865/1**		✓		✓	✓			✓	✓	**14 + 17**
20	**33871**	3A0501541		✓	✓	✓			✓	✓	STOP **synchro**
21	**19690/1**	357407151	✓		✓	✓			✓	✓	Chassis → 31N255989
22	**49674**	357422803A	✓		✓				✓	✓	**ZF**
23	**49675**	357422804A	✓			✓			✓	✓	**ZF**
24	**49674/1**		✓		✓	✓			✓	✓	**ZF**
25	**33935**	357411313	✓		✓				✓	✓	**Ø 21mm** innen/inner
26	**59816**	3A0422811A	✓		✓				✓	✓	Chassis 3A-R-099-265→
27	**59817**	3A0422812A	✓			✓			✓	✓	Chassis 3A-R-099-265→
28	**95870**		✓		✓	✓			✓	✓	MS
29	**19690/7**	357407151	✓		✓				✓	✓	**+** Chassis → 31N255989
30	**19691/7**	357407151	✓			✓			✓	✓	**+** Chassis → 31N255989
31	**36914**	357411314A	✓			✓			✓	✓	**Ø 22,7mm** innen/inner
32	**33948**	357411314	✓			✓			✓	✓	**Ø 21mm** innen/inner
33	**33949**	357411313A	✓		✓				✓	✓	**Ø 22,7mm** innen/inner

VOLKSWAGEN PASSAT (3B_) 08/96→05/05

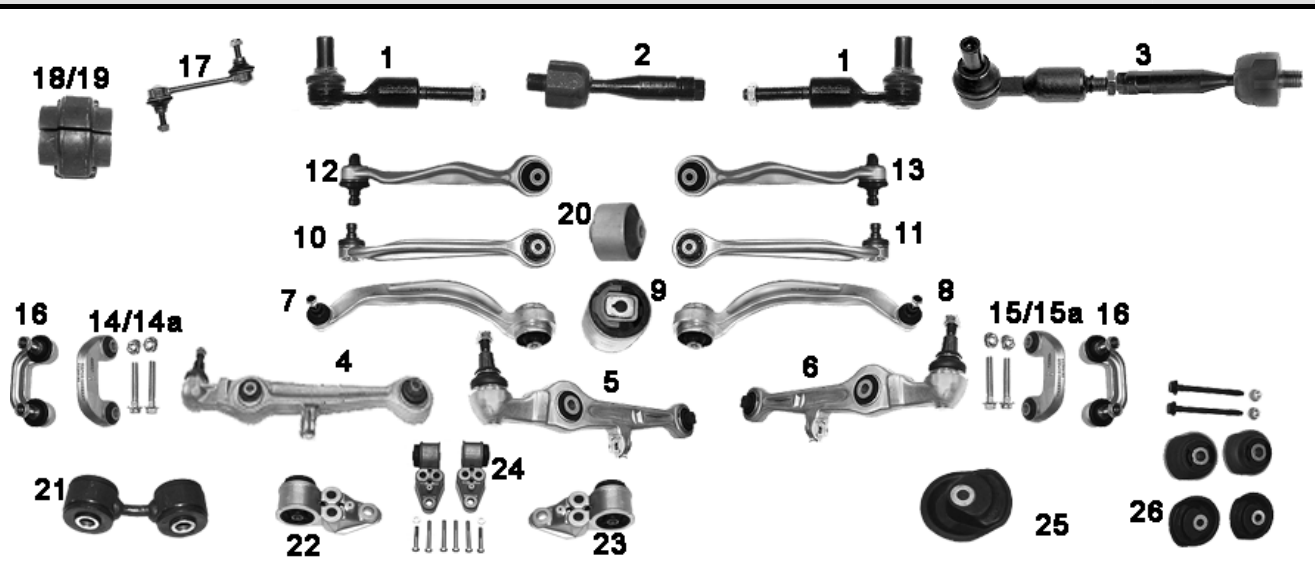

NR	MAPCO	REF								NEW	INFO
1	**49707HPS**	4D0419811B	✓		✓	✓			✓	✓		
2	**49738**	4D0422821A	✓		✓	✓			✓	✓		
3	**49732**	4D0419801B	✓		✓	✓			✓	✓		
4	**49710OES**	4D0407151P	✓		✓	✓			✓	✓		→2001
5	**51710OES**	4B3407155A	✓		✓	✓			✓	✓		2001→2005
6	**51730**	4B3407151K	✓		✓	✓			✓	✓		CH. 3B-3-072-001→
7	**49708OES**	4D0407693N	✓		✓			✓	✓	✓		hinten/ rear/ arrière
8	**49709OES**	4D0407694N	✓			✓		✓	✓	✓		hinten/ rear/ arrière
9	**33932**	4D0407183P	✓		✓	✓			✓	✓		innen/inner
10	**49680OES**	8D0407505F	✓		✓		✓		✓	✓		
11	**49681OES**	8D0407506F	✓			✓	✓		✓	✓		
12	**49791OES**	4D0407509G	✓		✓				✓	✓		hinten/ rear/ arrière
13	**49792OES**	4D0407510G	✓			✓			✓	✓		hinten/ rear/ arrière
14	**49683OES**	8D0411317D	✓		✓			✓	✓	✓		
14a	**49683/1OES**		✓		✓			✓	✓	✓		+
15	**49684OES**	8D0411318D	✓			✓		✓	✓	✓		
15a	**49684/1OES**		✓			✓		✓	✓	✓		+
16	**49682**	4D0411317J	✓		✓	✓			✓	✓		
17	**49714**	4D0505465D	✓		✓	✓			✓	✓		
18	**33939**	4D0411327E	✓		✓	✓			✓	✓		STOP
19	**33940**	4D0411327F	✓		✓	✓			✓	✓		✓
20	**36915**	4B0407515	✓		✓	✓	✓		✓	✓		vorn/ front/ avant
21	**59820**	8E0505465C		✓	✓	✓			✓	✓		✓ synchro/ 4-motion
22	**36775**	4B0501521D		✓	✓				✓	✓		
23	**36776**	4B0501522D		✓		✓			✓	✓		
24	**36782**			✓	✓	✓			✓	✓		
25	**33871**	3A0501541		✓	✓	✓			✓	✓		
26	**33871/4**	3A0501541S		✓	✓	✓			✓	✓		

VOLKSWAGEN PASSAT (3B_) Fortsetzung/ continued 08/96→05/05


27
33


27a
30
34


27b
31


28


28a
32

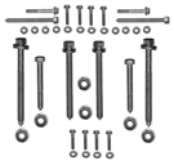
29

NR	MAPCO	REF			←	→	↑	↓			NEW	INFO
27	59818HPS	4D0498998C	✓		✓	✓			✓	✓		
27a	59818/1HPS	4D0498998C	✓		✓	✓			✓	✓		→2001 + MS
27b	59818/2	4D0498998C	✓		✓	✓			✓	✓		→2001 + MS
28	59819	8D0498998	✓		✓	✓			✓	✓		
28a	59819/1	8D0498998	✓		✓	✓			✓	✓		→2001 + MS
29	95710		✓		✓	✓			✓	✓		MS
30	59824/1HPS		✓		✓	✓			✓	✓		2001→2005 + MS
31	59824/2		✓		✓	✓			✓	✓		2001→2005 + MS
32	59825/1		✓		✓	✓			✓	✓		2001→2005 + MS
33	59826	4B3498998	✓		✓	✓			✓	✓	✓	CH. 3B-3-072-001→
34	59826/1	4B3498998	✓		✓	✓			✓	✓	✓	CH. 3B-3-072-001→ + MS

VOLKSWAGEN PASSAT (3C_) 03/05→

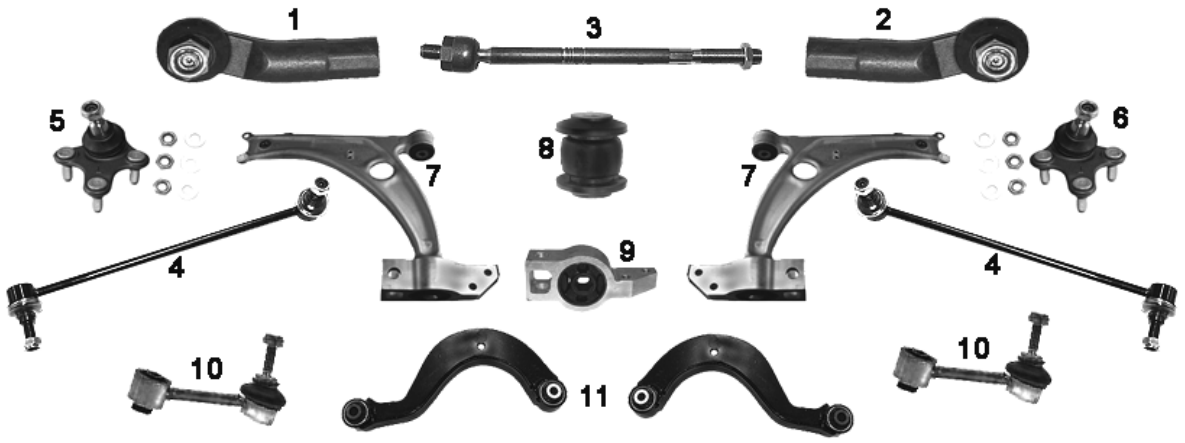

NR	MAPCO	REF			←	→	↑	↓			NEW	INFO
1	**51740**	1K0423811K	✓		✓			✓	✓	✓		M16x1,5
2	**51741**	1K0423812G	✓			✓		✓	✓	✓		M16x1,5
3	**51723**	1K0423810A	✓		✓				✓	✓		M16x1,5RHT 310 mm
4	**51825HPS**	1K0411315D	✓		✓	✓		✓	✓	✓		
5	**51724**	1K0407365E	✓		✓			✓	✓	✓		**Ø 16 mm**
6	**51725**	1K0407366E	✓			✓		✓	✓	✓		**Ø 16 mm**
7	**52717**	3C0407151E	✓		✓	✓		✓	✓	✓		
8	**36950**	1K0407182	✓		✓	✓		✓	✓	✓		
9	**33987**	3C0199231D	✓		✓	✓		✓	✓	✓		
10	**51829HPS**	1K0505465C		✓	✓	✓			✓	✓		
11	**52718**	1K0505323H		✓	✓	✓	✓		✓	✓		

VOLKSWAGEN PHAETON 04/02→

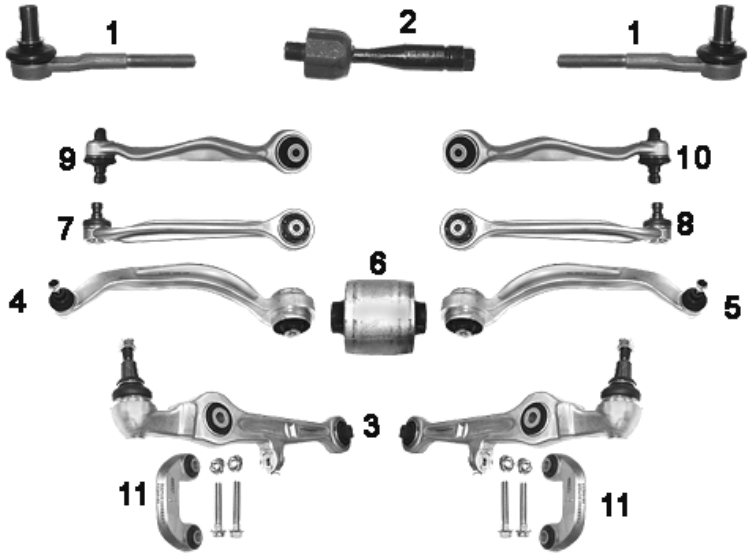

NR	MAPCO	REF									NEW	INFO
1	**51735**	4E0419811E	✓		✓	✓			✓	✓	✓	Metall Konus 23,0mm M16 x 1,5 mm
2	**51736**	4E0419801E	✓		✓	✓			✓	✓	✓	
3	**51737**	4E0407151L	✓		✓	✓		✓	✓	✓	✓	vorn/ front/ avant
4	**51738**	4F0407693N	✓		✓			✓	✓	✓	✓	hinten/ rear/ arrière
5	**51739**	4F0407694N	✓			✓		✓	✓	✓	✓	hinten/ rear/ arrière
6	**36777**	4F0407183A	✓		✓	✓		✓	✓	✓	✓	hinten/ rear/ arrière
7	**51876**	4E0407505B	✓		✓		✓		✓	✓	✓	vorn/ front/ avant
8	**51877**	4E0407506B	✓			✓	✓		✓	✓	✓	vorn/ front/ avant
9	**51878**	4E0407509B	✓		✓		✓		✓	✓	✓	hinten/ rear/ arrière
10	**51879**	4E0407510B	✓			✓	✓		✓	✓	✓	hinten/ rear/ arrière
11	**52711**	4E0411317E	✓		✓	✓		✓	✓	✓	✓	

VOLKSWAGEN POLO II 03/75→09/94

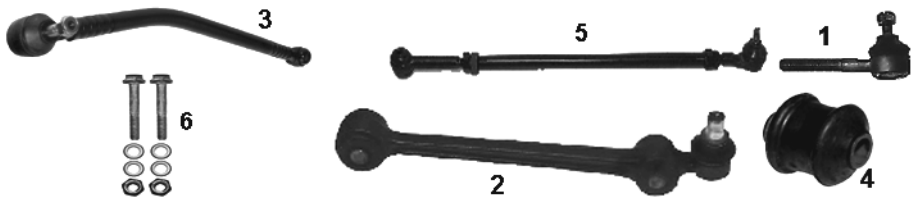

NR	MAPCO	REF									NEW	INFO
1	**19850**	811419812	✓		✓	✓			✓	✓		M14x1,5RHT
2	**19854**	861407151B	✓		✓	✓			✓	✓		10/78 →84
3	**19899**	871419801A	✓		✓	✓			✓	✓		1987→09/94
4	**33893**	861407183	✓		✓				✓	✓		
5	**49878**	871419802	✓		✓	✓			✓	✓		1987→09/94
6	**95854**		✓		✓	✓			✓	✓		MS

VOLKSWAGEN POLO III 10/94→ 09/01

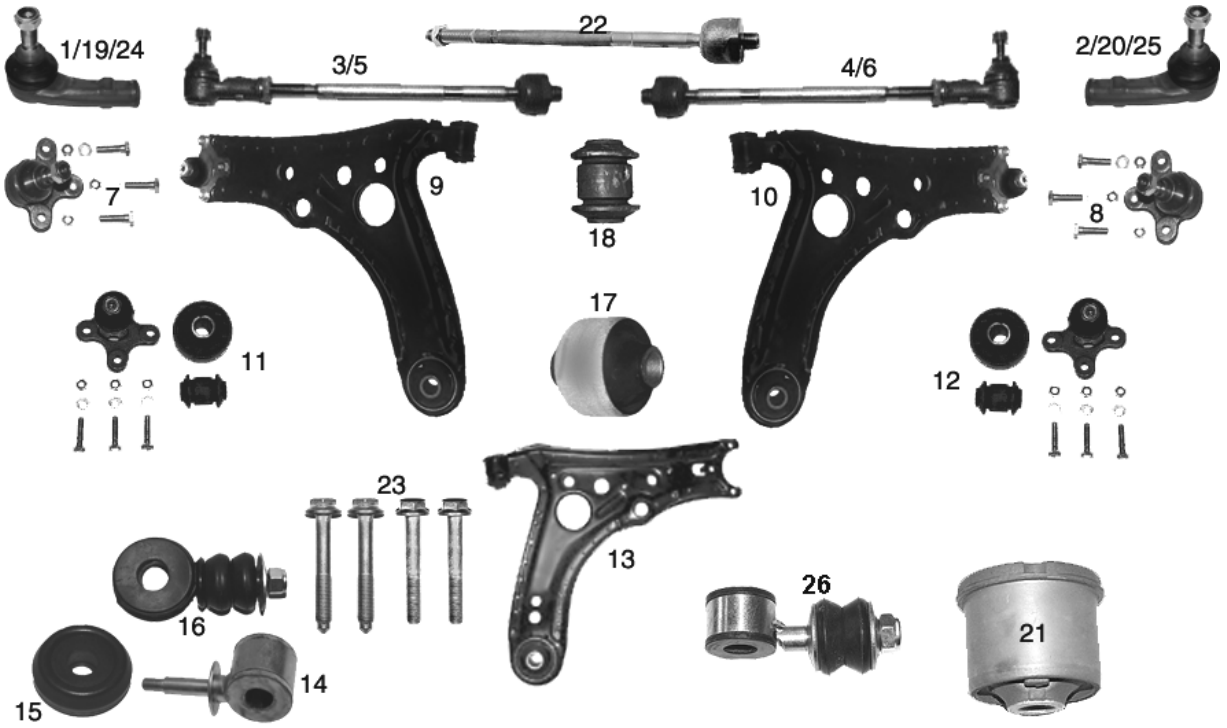

NR	MAPCO	REF								NEW	INFO
1	**19885**	6N0419811	✓		✓					✓		M14 x 1,5 RHT
2	**19886**	6N0419812	✓			✓				✓		M14 x 1,5 RHT
3	**19688**	6N0419803	✓		✓					✓		
4	**19689**	6N0419804	✓			✓				✓		
5	**59890**	6X0422803A	✓		✓				✓			
6	**59889**	6X0422804A	✓			✓			✓			
7	**19895**	6N0407365	✓		✓				✓	✓		
8	**19896**	6N0407365A	✓			✓			✓	✓		
9	**19686**	6N0407151B	✓		✓				✓	✓		
10	**19687**	6N0407151B	✓			✓			✓	✓		
11	**19295**		✓		✓				✓	✓		Kit
12	**19296**		✓			✓			✓	✓		Kit
13	**19686/1**	6N0407151B	✓		✓	✓			✓	✓		
14	**49862**	6N0411315	✓		✓	✓			✓	✓		
15	**49862/9**	6N0411329	✓		✓	✓			✓	✓		
16	**49862/1**		✓		✓	✓			✓	✓		**14 + 15(2x)**
17	**33835**	6N0407181	✓		✓	✓			✓	✓		
18	**33834**	6N0407182	✓		✓	✓			✓	✓		
19	**49871**	6N0422811	✓		✓				✓			M14 x 1,5 RHT
20	**49872**	6N0422812	✓			✓			✓			M14 x 1,5 RHT
21	**33937**	6N0501541D		✓	✓	✓			✓	✓		
22	**19696/1**	6N0422821A	✓		✓	✓			✓			M14x1,5 RH
23	**95686**		✓		✓	✓			✓	✓		MS
24	**51822**	6X0422811	✓		✓				✓			M14x1,5 RHT
25	**51823**	6X0422812	✓			✓			✓			M14x1,5 RHT
26	**51862**	191411315A	✓		✓	✓			✓	✓		**Ø 18 mm**

VOLKSWAGEN POLO IV 10/01→

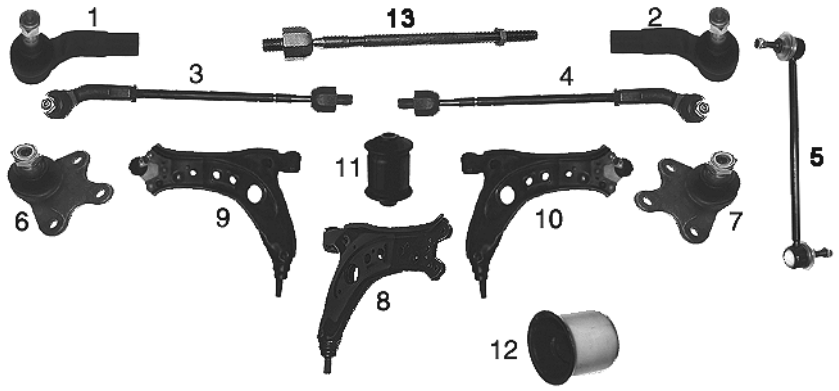

NR	MAPCO	REF								NEW	INFO
1	**59806**	6Q0423811	✓		✓				✓	✓	
2	**59807**	6Q0423812	✓			✓			✓	✓	
3	**59808**	6Q0423803B	✓		✓				✓	✓	**M14x1,5**
4	**59809**	6Q0423804B	✓			✓			✓	✓	**M14x1,5**
5	**59812HPS**	6Q0411315C	✓		✓	✓			✓	✓	
6	**59810**	6Q0407365A	✓		✓				✓	✓	
7	**59811**	6Q0407366A	✓			✓			✓	✓	
8	**59813**	6Q0407151D	✓		✓	✓			✓	✓	
9	**59813/1**		✓			✓			✓	✓	**6 + 8**
10	**59813/2**		✓			✓			✓	✓	**7 + 8**
11	**36938**	6Q0407182A	✓		✓	✓			✓	✓	
12	**36939**	6Q0407183	✓		✓	✓			✓	✓	
13	**59808/1**	6Q0423810C	✓		✓	✓			✓		**SMI/ KOJO 9N-2-000 001 >**

VOLKSWAGEN POLO CLASSIC 12/95→ 09/01

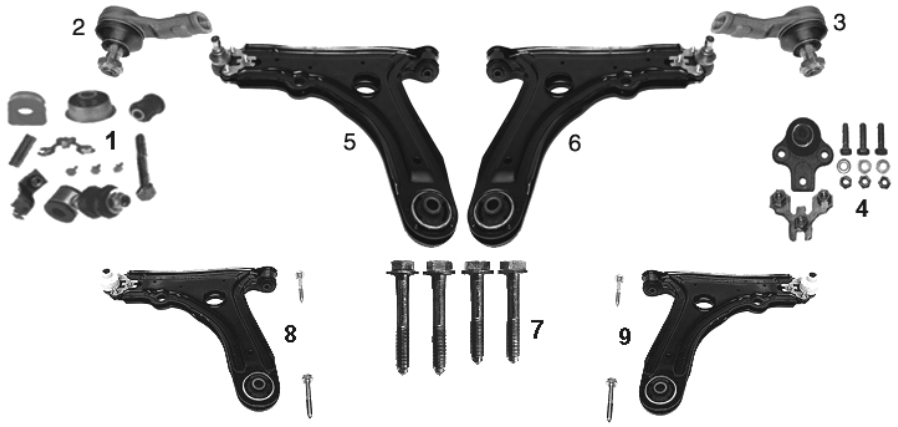

NR	MAPCO	REF								NEW	INFO
1	**33890**		✓		✓	✓			✓	✓	
2	**19877**	191419811	✓		✓				✓	✓	M14x1,5RHT
3	**19878**	191419812	✓			✓			✓	✓	M14x1,5RHT
4	**19889/1**	357407365A	✓		✓	✓			✓	✓	**Ø 19 mm**
5	**19858/1**		✓		✓				✓	✓	
6	**19858/2**		✓			✓			✓	✓	
7	**95858**		✓		✓	✓			✓	✓	MS
8	**19858/7**		✓		✓				✓	✓	+
9	**19858/8**		✓			✓			✓	✓	+

VOLKSWAGEN SCIROCCO (137) 09/08→

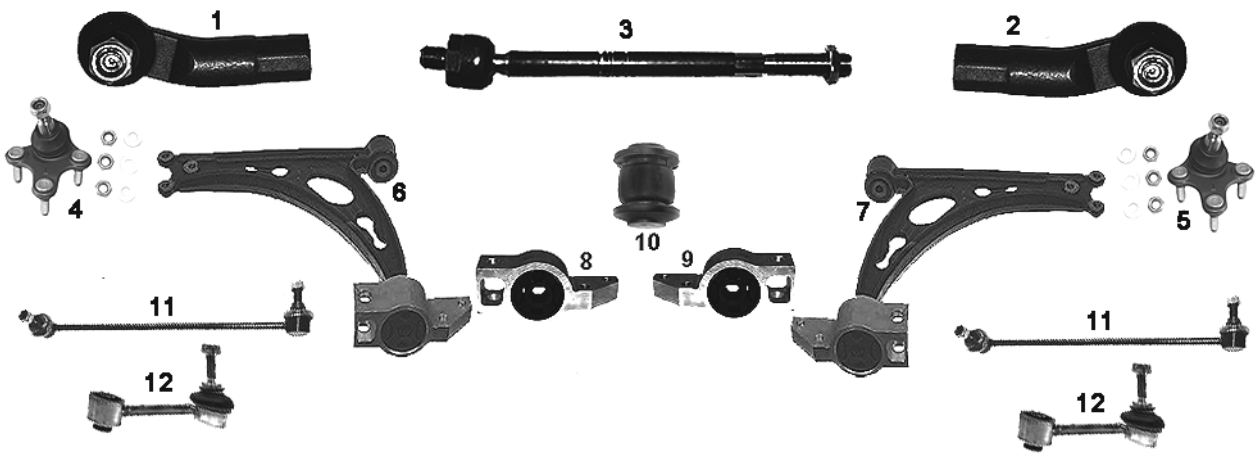

NR	MAPCO	REF			←	→	↑	↓			NEW	INFO
1	**51826**	1K0 423 811J	✓		✓				✓	✓		
2	**51827**	1K0 423 812J	✓			✓			✓	✓		
3	**51723**	1K0 423 810A	✓		✓	✓			✓	✓		M16x1,5RHT 310 mm
4	**51724**	1K0 407 365E	✓		✓			✓	✓	✓		**Ø 16 mm**
5	**51725**	1K0 407 366E	✓			✓		✓	✓	✓		**Ø 16 mm**
6	**51726**	1K0 407 151AC	✓		✓			✓	✓	✓	✓	
7	**51727**	1K0 407 152AC	✓			✓		✓	✓	✓	✓	
8	**36948**	1K0 199 231G	✓		✓			✓	✓	✓		
9	**36949**	1K0 199 232G	✓			✓		✓	✓	✓		
10	**36950**	1K0 407 182	✓		✓	✓		✓	✓	✓		
11	**51825HPS**	1K0 411 315D	✓		✓	✓		✓	✓	✓		
12	**51829HPS**	1K0 505 465C		✓	✓	✓			✓	✓		

VOLKSWAGEN SHARAN 05/95→

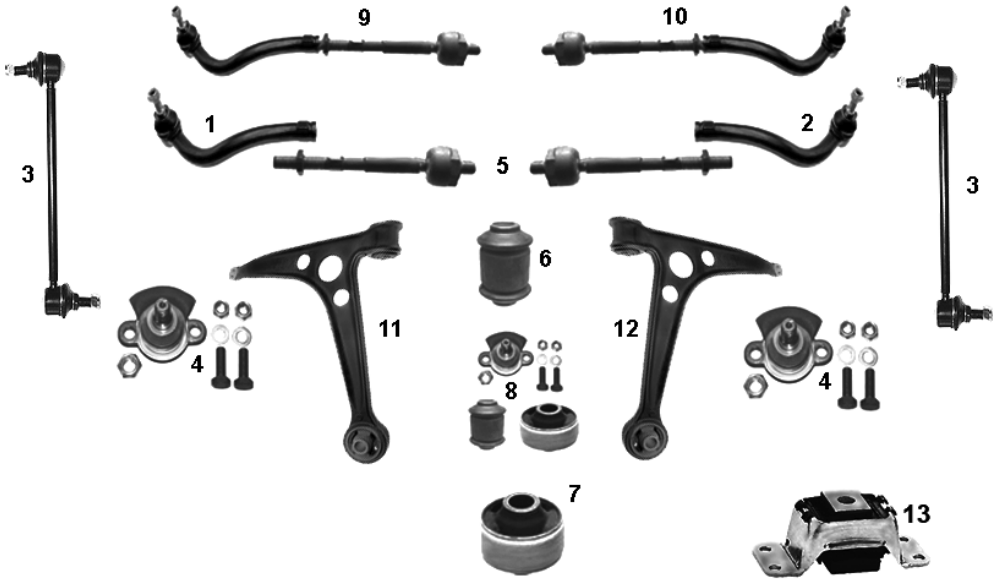

NR	MAPCO	REF								NEW	INFO
1	**49857**	7M0422817	✓		✓				✓	✓		M14x1,50 RHT
2	**49858**	7M0422818	✓			✓			✓	✓		M14x1,50 RHT
3	**49856HPS**	7M0411317	✓		✓	✓			✓	✓		
4	**49861**	7M0407365A	✓		✓	✓			✓	✓		
5	**49866**	7M0422803G	✓		✓	✓			✓	✓		
6	**33908**	7M0501541	✓		✓	✓			✓	✓		
7	**33928**	7M0407181A	✓		✓	✓			✓	✓		
8	**19266**		✓		✓	✓			✓	✓		Kit
9	**49866/1**	7M0422803G	✓		✓				✓	✓		
10	**49866/2**	7M0422804G	✓			✓			✓	✓		
11	**49876**	7M0407151B	✓		✓				✓	✓		
12	**49877**	7M0407152B	✓			✓			✓	✓		
13	**33864**	7M0505221C		✓	✓	✓			✓	✓		✓1.8T 20V

VOLKSWAGEN TARO 04/89→03/97

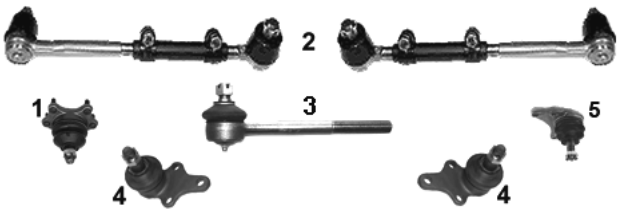

NR	MAPCO	REF								NEW	INFO
1	**59261**	43350-39045	✓		✓	✓	✓		✓	✓		**Ø 17 mm**
2	**59262**	45460-29215	✓		✓	✓			✓	✓		
3	**59282**	45046-39125	✓		✓	✓			✓	✓		
4	**59569**	43330-39245	✓		✓	✓		✓	✓	✓		
5	**59236**	43350-39035	✓		✓	✓	✓		✓	✓		**Ø 15 mm**

VOLKSWAGEN TIGUAN 09/07→

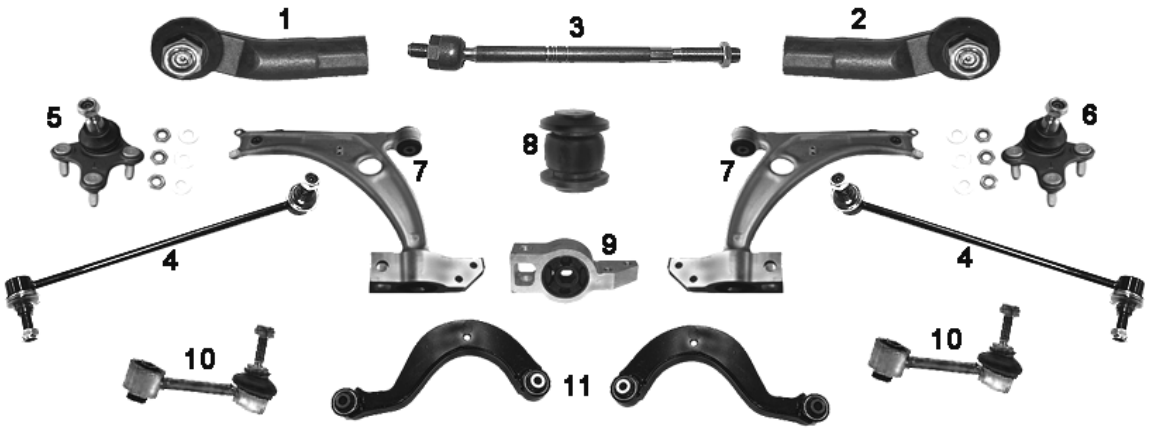

NR	MAPCO	REF			←	→	↑	↓			NEW	INFO
1	**51740**	1K0423811K	✓		✓				✓	✓	✓	M16x1,5
2	**51741**	1K0423812G	✓			✓			✓	✓	✓	M16x1,5
3	**51723**	1K0423810A	✓		✓	✓			✓	✓		M16x1,5RHT 310 mm
4	**51825HPS**	1K0411315D	✓		✓	✓		✓	✓	✓		
5	**51724**	1K0407365E	✓		✓			✓	✓	✓		**Ø 16 mm**
6	**51725**	1K0407366E	✓			✓		✓	✓	✓		**Ø 16 mm**
7	**52717**	3C0407151E	✓		✓	✓		✓	✓	✓		
8	**36950**	1K0407182	✓		✓	✓		✓	✓	✓		
9	**33987**	3C0199231D	✓		✓	✓		✓	✓	✓		
10	**51829HPS**	1K0505465C		✓	✓	✓			✓	✓		
11	**52718**	1K0505323H		✓	✓	✓	✓		✓	✓		

VOLKSWAGEN TOURAN 02/03→

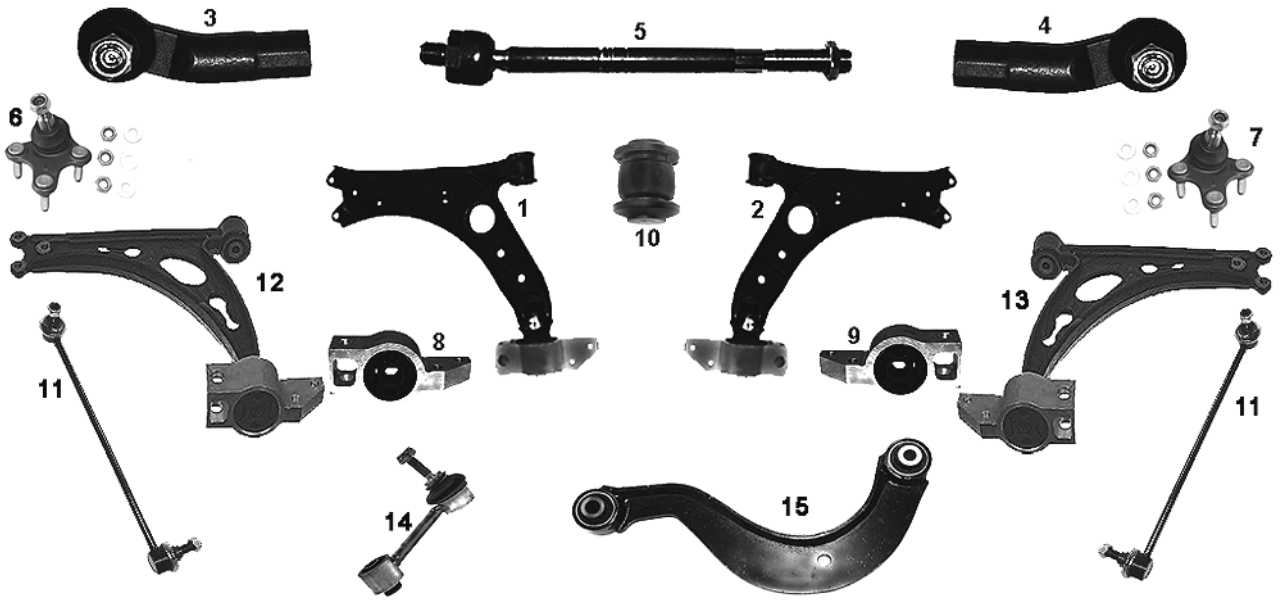

NR	MAPCO	REF								NEW	INFO
1	**51715**	1K0 407 151P	✓		✓			✓	✓	✓	
2	**51716**	1K0 407 152P	✓			✓		✓	✓	✓	
3	**51826**	1K0 423 811J	✓		✓				✓	✓	
4	**51827**	1K0 423 812J	✓			✓			✓	✓	
5	**51723**	1K0 423 810A	✓		✓	✓			✓	✓	M16x1,5RHT 310 mm
6	**51724**	1K0 407 365E	✓		✓			✓	✓	✓	**Ø 16 mm**
7	**51725**	1K0 407 366E	✓			✓		✓	✓	✓	**Ø 16 mm**
8	**36948**	1K0 199 231G	✓		✓			✓	✓	✓	
9	**36949**	1K0 199 232G	✓			✓		✓	✓	✓	
10	**36950**	1K0 407 182	✓		✓	✓		✓	✓	✓	
11	**51825HPS**	1K0 411 315D	✓		✓	✓		✓	✓	✓	
12	**51726**	1K0 407 151AC	✓		✓			✓	✓	✓	✓
13	**51727**	1K0 407 152AC	✓			✓		✓	✓	✓	✓
14	**51829HPS**	1K0 505 465C		✓	✓	✓			✓	✓	
15	**52718**	1K0 505 323H		✓	✓	✓	✓		✓	✓	✓

VOLKSWAGEN TOUAREG (7LA) 10/02→

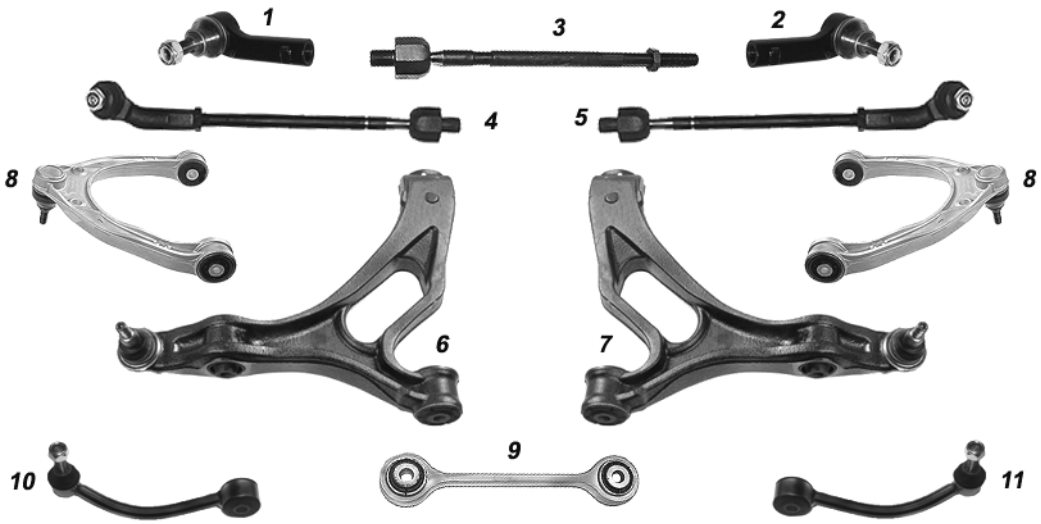

NR	MAPCO	REF									NEW	INFO
1	**51742**	7L0422817D	✓		✓				✓	✓	✓	M16X1,5
2	**51743**	7L0422818D	✓			✓			✓	✓	✓	M16X1,5
3	**51744**	7L0422821	✓		✓	✓			✓	✓	✓	M16X1,5
4	**51745**	7L0422803D	✓		✓				✓	✓	✓	1+3
5	**51746**	7L0422804D	✓			✓			✓	✓	✓	2+3
6	**52714**	7L8407151E	✓		✓			✓	✓	✓	✓	
7	**52715**	7L8407152D	✓			✓		✓	✓	✓	✓	
8	**52716**	7L0407021	✓		✓	✓	✓		✓	✓	✓	
9	**51824**	7L0411317	✓		✓	✓			✓	✓		197,0 mm
10	**51733**	7L0505465D		✓	✓				✓	✓	✓	
11	**51734**	7L0505466D		✓		✓			✓	✓	✓	

VOLKSWAGEN TRANSPORTER LT 28 - 35 I BUS 1975→ 06/96
VOLKSWAGEN TRANSPORTER LT 40 - 45 I Kasten / Pritsche 1978→ 06/96

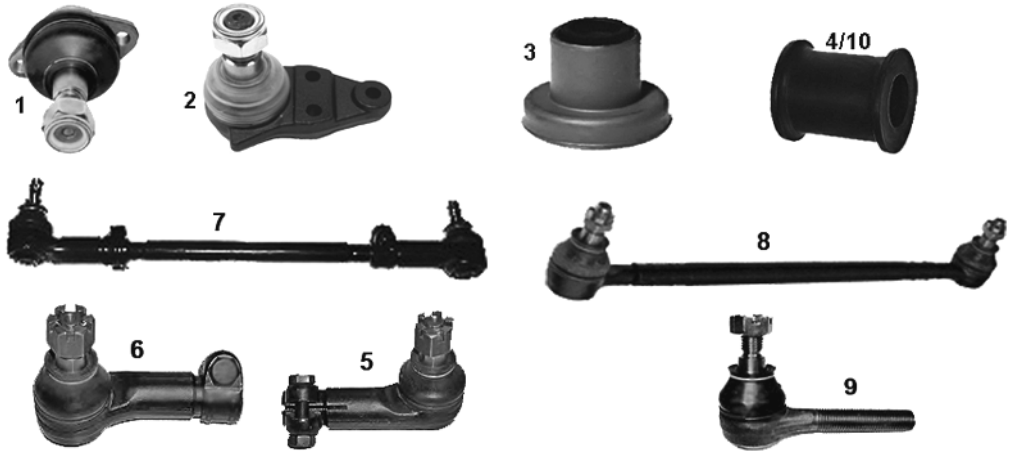

NR	MAPCO	REF								NEW	INFO
1	**19851**	281407361	✓		✓	✓	✓		✓	✓	
2	**19852**	281407187A	✓		✓	✓		✓	✓	✓	
3	**33929**	281407077	✓		✓	✓			✓	✓	aussen/outside
4	**33815**	281411041	✓		✓	✓		✓	✓	✓	**L 47mm, Ø innen/inner 21mm**
5	**51802**	281415 801D part	✓		✓	✓			✓	✓	14,5mm aussen/outside M16x1,50RHT
6	**51803**	281415 801D part	✓		✓	✓			✓	✓	14,5mm innen/inner M16x1,50LHT
7	**51806**	281415 801D	✓		✓				✓	✓	
8	**51805**	281415 802A	✓			✓			✓	✓	
9	**51808**	281415 811	✓		✓	✓			✓	✓	16mm aussen/outside M14x1,50LHT
10	**33945**	281411045	✓		✓	✓			✓	✓	**L 31mm Ø innen/inner 21mm**

VOLKSWAGEN TRANSPORTER LT 28 - 31 - 35 II BUS 04/96→
LT 28 - 46 II Kasten / Pritsche 04/96→

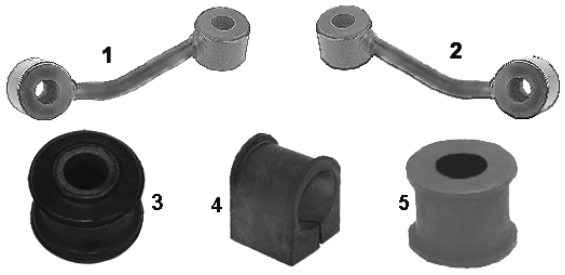

NR	MAPCO	REF								NEW	INFO
1	**59854**	2D0411051	✓		✓				✓	✓	
2	**59855**	2D0411052	✓			✓			✓	✓	
3	**33946**	2D0511413	✓		✓	✓			✓	✓	Ø innen/inner 12mm
4	**33947**	2D0411041B	✓		✓	✓			✓	✓	Ø innen/inner 25mm
5	**36947**	2D0411041A	✓		✓	✓			✓	✓	

VOLKSWAGEN TRANSPORTER T2 08/67→07/79
VOLKSWAGEN TRANSPORTER T3 05/79→07/92

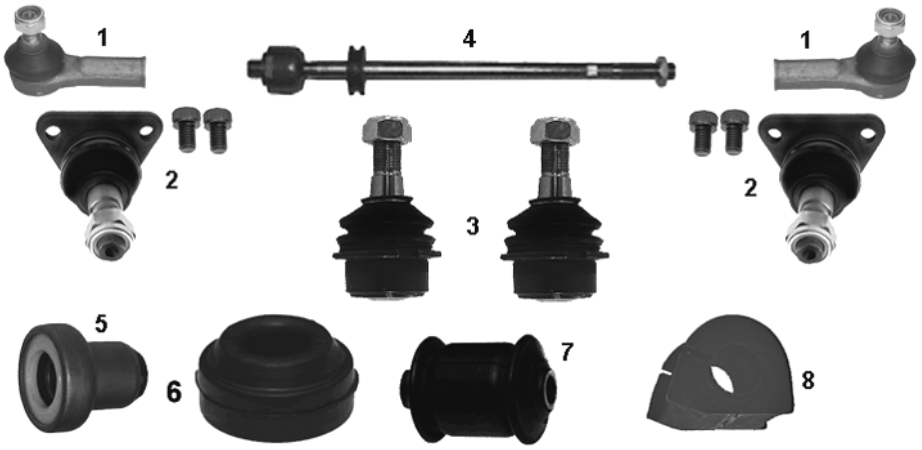

NR	MAPCO	REF			←	→	↑	↓		NEW	INFO
1	**19874**	171419812	✓		✓	✓			✓	✓		M14x1,5 RHT
2	**19883**	251407361	✓		✓	✓	✓		✓	✓		1979→1992 ✓**T3**
3	**19881**	211405371A	✓		✓	✓		✓	✓	✓		→12/78 ✓**T2**
3	**19884**	251407187B	✓		✓	✓		✓	✓	✓		1979→1992 ✓**T3**
4	**19887**		✓		✓	✓			✓	✓		M14 x 1,5 RHT
5	**33859**	251407077	✓		✓	✓			✓	✓		
6	**33900**	251407175	✓		✓	✓			✓	✓		
7	**33896**	251407183	✓		✓	✓			✓	✓		
8	**33814**	251411041C	✓		✓	✓			✓	✓		Chassis 24-E-145100→ kg **1200**

VOLKSWAGEN TRANSPORTER T4 09/90→04/03

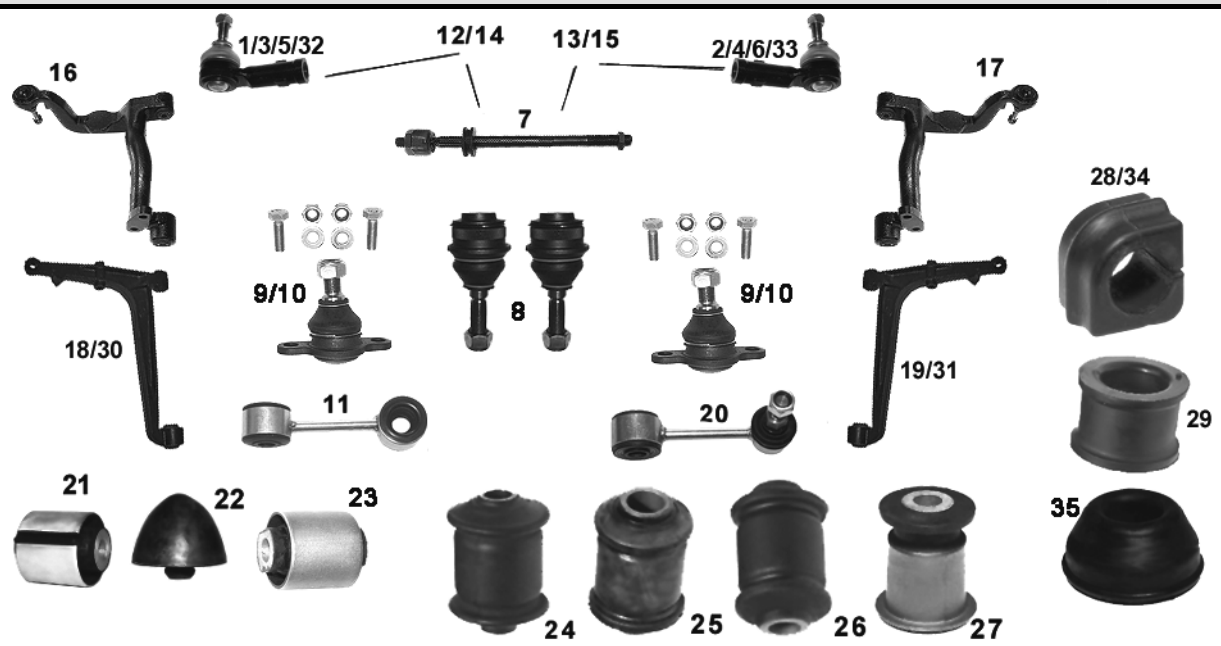

NR	MAPCO	REF								NEW	INFO
1	**19859**	701419811A	✓		✓				✓	✓		Chassis → 70M096448 M16x1,5RHT
2	**19880**	701419812	✓			✓			✓	✓		Chassis → 70M096448 M16x1,5RHT
3	**19866**	701419811B	✓		✓				✓	✓		Chassis 70M096449→70S002791 →08/94 M16x1,5RHT
4	**19867**	701419812A	✓			✓			✓	✓		Chassis 70M096449→70S002791 →08/94 M16x1,5RHT
5	**19873**	701419811C	✓		✓				✓	✓		18 mm
6	**19882**	701419812B	✓			✓			✓	✓		18 mm
7	**49764**		✓		✓	✓			✓	✓		
8	**19868**	701407187B	✓		✓	✓	✓		✓	✓		
9	**19869**	701407361C	✓		✓	✓			✓	✓		→12/95
10	**49859**	7D0407361	✓		✓	✓			✓	✓		01/96→
11	**49851**	7D0411049	✓		✓	✓			✓	✓		
12	**49766**	701419803D	✓		✓				✓	✓		**3 + 7**
13	**49767**	701419804D	✓			✓			✓	✓		**4 + 7**
14	**49773**	701419803E	✓		✓				✓	✓		**5 + 7**
15	**49774**	701419804E	✓			✓			✓	✓		**6 + 7**
16	**49852**	701407021B	✓		✓		✓		✓	✓		→12/95
17	**49853**	701407022B	✓			✓	✓		✓	✓		→12/95
18	**49854**	701407151A	✓		✓			✓	✓	✓		→12/95
19	**49855**	701407152A	✓			✓		✓	✓	✓		→12/95
20	**49863**	701411049B	✓		✓	✓			✓	✓		
21	**33872**	7D0407140	✓		✓	✓		✓	✓	✓		
22	**33873**	701407303	✓		✓	✓			✓	✓		
23	**36784**	7D0407140C	✓		✓	✓		✓	✓	✓		
24	**33913**	701407077	✓		✓	✓			✓	✓		
25	**33914**	701407183	✓		✓	✓			✓	✓		
26	**33915**	701407087	✓		✓	✓			✓	✓		
27	**33916**	7D0407183	✓		✓	✓			✓	✓		
28	**33925**	701411041	✓		✓	✓			✓	✓		Innen/inner Ø 23mm
29	**33926**	7D0411045	✓		✓	✓			✓	✓		
30	**59804**	7D0407151A	✓		✓			✓	✓	✓		01/96→
31	**59805**	7D0407152A	✓			✓		✓	✓	✓		01/96→
32	**59814**	701419811E	✓		✓				✓	✓		01/96→ Chassis 70-T-200000→
33	**59815**	701419812D	✓			✓			✓	✓		01/96→ Chassis 70-T-200000→
34	**36940**	701411041D	✓		✓	✓			✓	✓		Innen/inner Ø 27mm
35	**33897**	251407179		✓	✓	✓			✓	✓		

VOLKSWAGEN TRANSPORTER T4 — Kits — 09/90→04/03



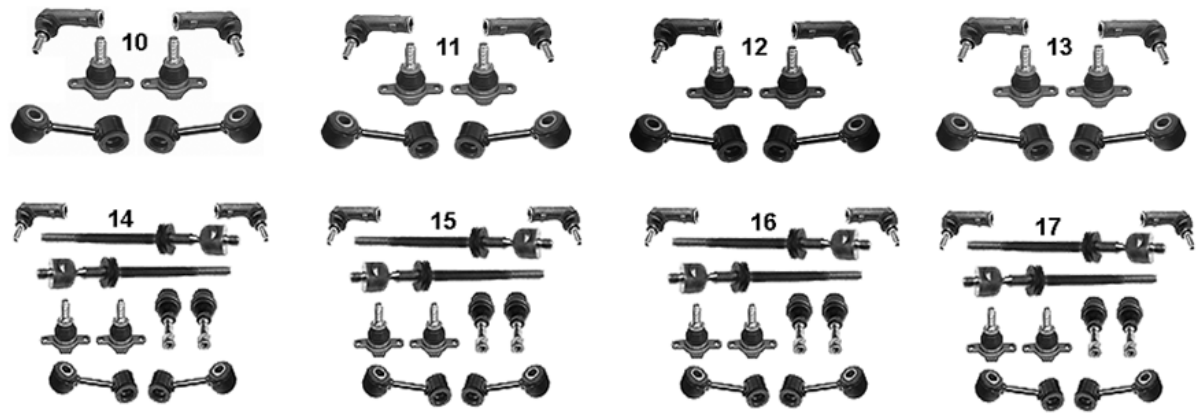

NR	MAPCO	REF								NEW	INFO
1	19267		✓		✓	✓		✓	✓	✓		01/96→
2	19267/2		✓		✓	✓		✓	✓	✓		2 x 19267 01/96→
3	19268		✓		✓	✓	✓		✓	✓		08/91→
4	19268/2		✓		✓	✓	✓		✓	✓		2 x 19268 08/91→
5	19269		✓		✓	✓		✓	✓	✓		08/91 → 12/95
6	19269/2		✓		✓	✓		✓	✓	✓		2 x 19269 08/91 → 12/95
7	19290		✓		✓	✓	✓		✓	✓		08/91→
8	19291		✓		✓	✓		✓	✓	✓		08/91 → 12/95
9	19292		✓		✓	✓		✓	✓	✓		01/96→
10	51811		✓		✓	✓			✓	✓		→ 07/91 Chassis →70-M-096 448
11	51812		✓		✓	✓			✓	✓		→08/94 Chassis 70-M-096 449 →70-S-002 791
12	51813		✓		✓	✓			✓	✓		→11/95 Chassis 70-S-002 792 →70-T-199 999
13	51814		✓		✓	✓			✓	✓		11/95-> Chassis 70-T-200 000 →
14	51815		✓		✓	✓			✓	✓		→07/91 Chassis →70-M-096 448
15	51816		✓		✓	✓			✓	✓		→08/94 Chassis 70-M-096 449 →70-S-002 791
16	51817		✓		✓	✓			✓	✓		→11/95 Chassis 70-S-002 792 →70-T-199 999
17	51818		✓		✓	✓			✓	✓		11/95→ Chassis 70-T-200 000→

VOLKSWAGEN TRANSPORTER T5 / MULTIVAN T5 04/03 →

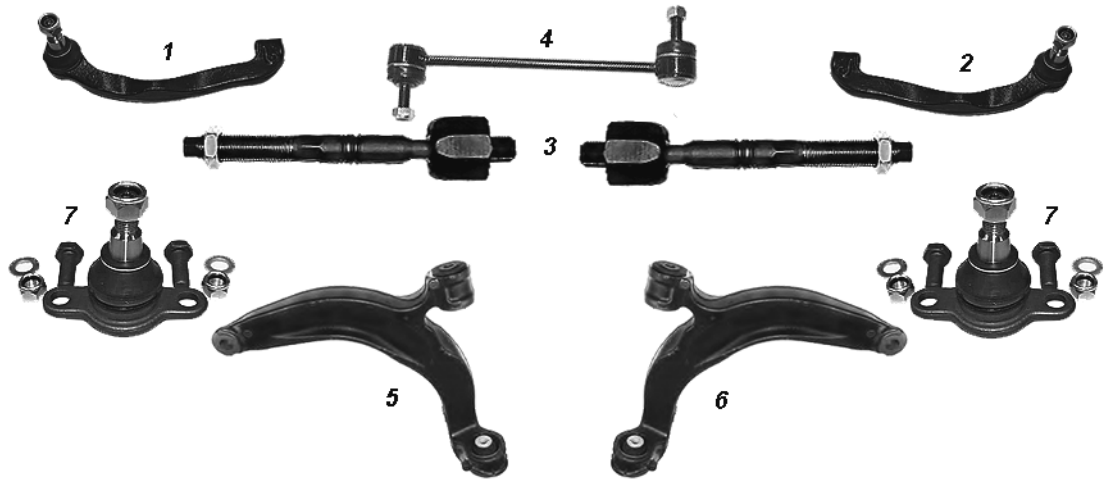

NR	MAPCO	REF								NEW	INFO
1	**51719**	7H0 422 817C	✓		✓				✓	✓		M16x1,5
2	**51720**	7H0 422 818C	✓			✓			✓	✓		M16x1,5
3	**51722**	7H0 419 803C part of	✓		✓	✓			✓	✓		M16x1,5
4	**51718HPS**	7H5 411 317	✓		✓	✓			✓	✓		
5	**51731**	7H0 407151F	✓		✓			✓	✓	✓	✓	
6	**51732**	7H0 407152F	✓			✓		✓	✓	✓	✓	
7	**51721**	7E0 407 361	✓		✓	✓		✓	✓	✓		

VOLVO

VOLVO 242 - 244 - 245
VOLVO 262 - 264 - 265
08/74→08/93

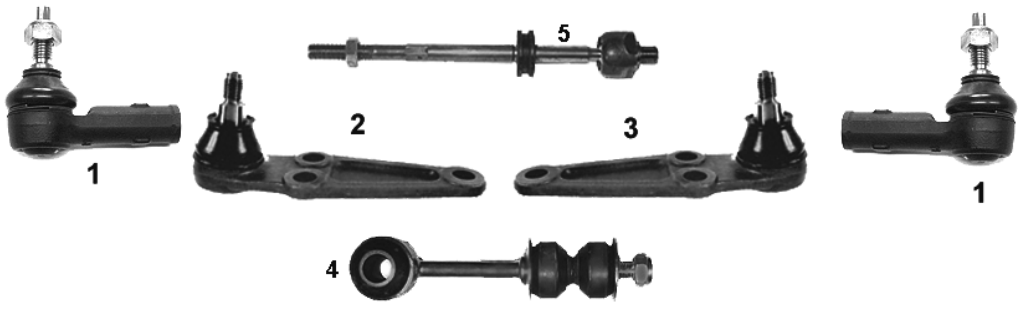

NR	MAPCO	REF								NEW	INFO
1	**19906**	1205658	✓		✓	✓			✓	✓		M14x2RHT
2	**19902**	1330821	✓		✓				✓			1978→
3	**19901**	1330820	✓			✓			✓			1978→
4	**19915**	1206667	✓		✓	✓			✓	✓		Innen/inner ∅ 10mm
5	**49952**	3530167	✓		✓	✓			✓	✓		M14x1,5RHT 252 mm **ZF**

VOLVO 480 E
VOLVO 440 K - 460 L

04/86→ 09/95
08/88→ 12/96

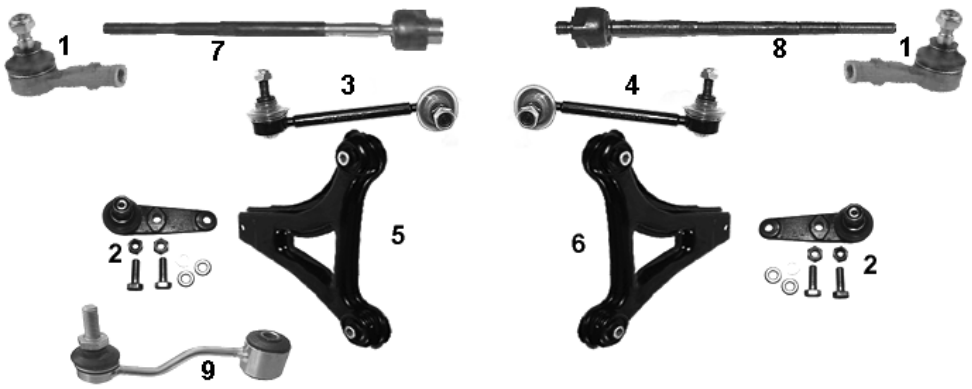

NR	MAPCO	REF			←	→	↑	↓			NEW	INFO
1	**19908**	3480 012	✓		✓	✓			✓	✓		M12x1,5RHT
2	**19909**	3410 519	✓		✓	✓			✓	✓		
3	**49901HPS**	8416 129	✓		✓				✓	✓		
4	**49902HPS**	8416 130	✓			✓			✓	✓		
5	**49925**	3443 998	✓		✓				✓	✓		STOP D
6	**49926**	3443 999	✓			✓			✓	✓		STOP D
7	**49928**	3410 369	✓		✓	✓				✓		M14x1,50RHT 268,0 mm
8	**49944**	334 2824	✓		✓	✓			✓			M16x1,5 RHT 289,0 mm
9	**19903**	343 4868		✓	✓	✓			✓	✓		

VOLVO 740
VOLVO 760
VOLVO 780 Coupé

08/83→08/92
02/82→07/92
08/86→07/90

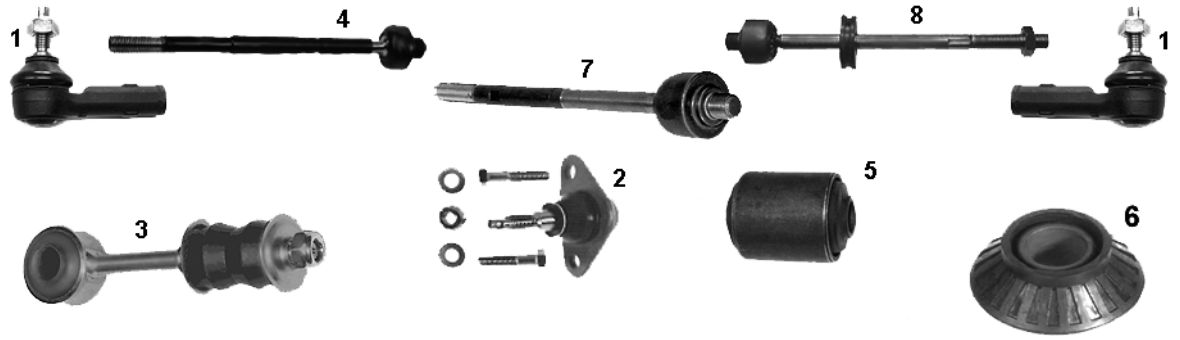

NR	MAPCO	REF			←	→	↑	↓			NEW	INFO
1	**19906**	1 205 658	✓		✓	✓			✓	✓		M14 x 2,0 RHT
2	**19907**	1 229 573	✓		✓	✓			✓	✓		
3	**19913**	9 157 725	✓		✓	✓			✓	✓		Innen/inner ∅ 12 mm
4	**49900**	1 273 126	✓		✓	✓			✓	✓		M18X1,5RHT **TRW**
5	**33917**	1 329 655	✓		✓	✓			✓	✓		✓ 740+760
6	**33923**	6 819 057	✓		✓	✓			✓	✓		
7	**49942**	9140 504	✓		✓	✓			✓	✓		M14x1,5RHT 250,0 mm **CAM**
8	**49943**	1387 356	✓		✓	✓			✓	✓		M14x2,0RHT **ZF**

VOLVO 850 06/91→12/96

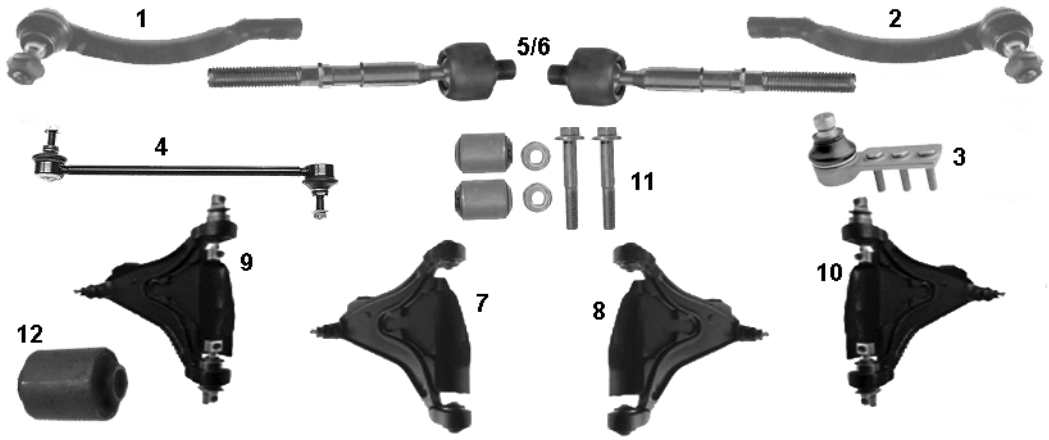

NR	MAPCO	REF								NEW	INFO
1	**19910**	271598.5	✓		✓				✓	✓		M14x2,0RHT
2	**19911**	271599.3	✓			✓			✓	✓		M14x2,0RHT
3	**19912**	271591.0	✓		✓	✓			✓	✓		
4	**19914HPS**	1387860	✓		✓	✓			✓	✓		
5	**49917**	3546266	✓		✓	✓			✓	✓		**TRW**
6	**49954**	919 1410	✓		✓	✓			✓	✓		203 mm **SMI**
7	**49912**	271901	✓		✓				✓	✓		STOP **Turbo**
8	**49913**	271902	✓			✓			✓	✓		STOP **Turbo**
9	**49914**	272336	✓		✓				✓	✓		✓**Turbo**
10	**49915**	272337	✓			✓			✓	✓		✓**Turbo**
11	**36975**	271631	✓		✓	✓			✓	✓		**KIT**
12	**36976**	6800251	✓		✓	✓			✓	✓	✓	

VOLVO 940 I + II 1990→ 10/98

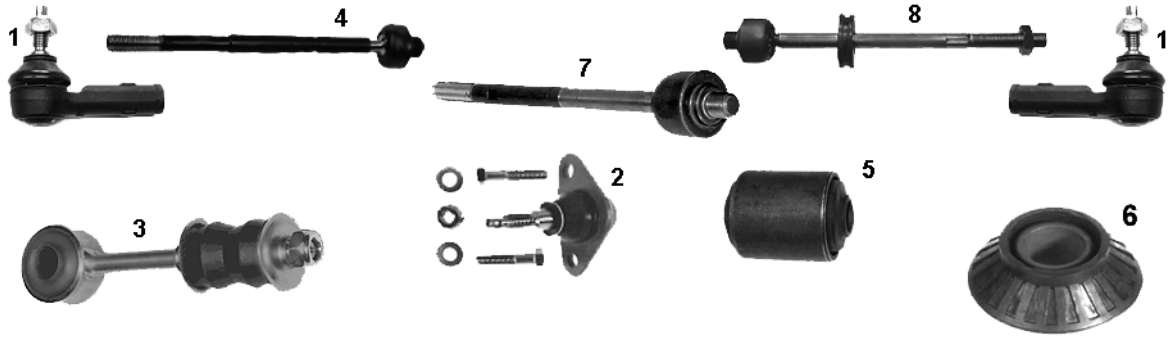

NR	MAPCO	REF								NEW	INFO
1	**19906**	1 205 658	✓		✓	✓			✓	✓		M14 x 2,0 RHT
2	**19907**	1 229 573	✓		✓	✓			✓	✓		
3	**19913**	9 157 725	✓		✓	✓			✓	✓		Innen/inner ∅ 12 mm
4	**49900**	1 273 126	✓		✓	✓			✓	✓		M18X1,5RHT **TRW**
5	**33917**	1 329 655	✓		✓	✓			✓	✓		✓740+760
6	**49918**	9140788F	✓		✓	✓			✓	✓		**TRW**
7	**49942**	9140 504	✓		✓	✓			✓	✓		M14x1,5RHT 250,0 mm **CAM**
8	**49943**	1 387 356	✓		✓	✓			✓	✓		M14x2,0RHT **ZF**

VOLVO 960 I + II — 08/90→ 12/96

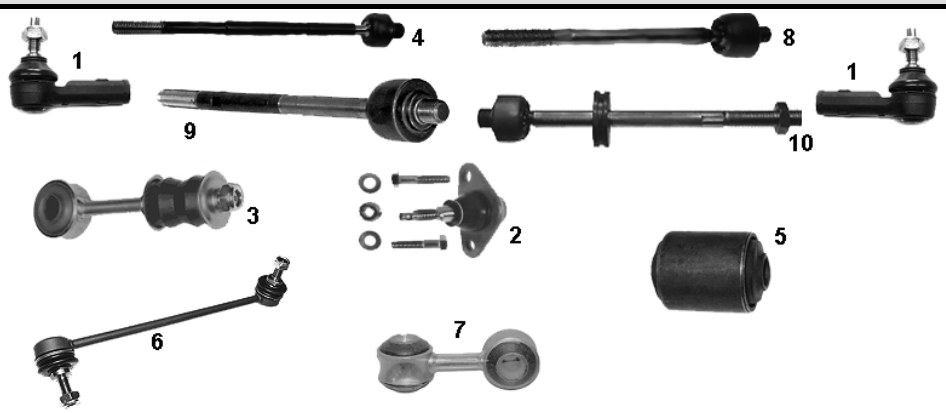

NR	MAPCO	REF								NEW	INFO
1	**19906**	1 205 658	✓		✓	✓			✓	✓		M14 x 2,0 RHT
2	**19907**	1 229 573	✓		✓	✓			✓	✓		
3	**19913**	9 157 725	✓		✓	✓			✓	✓		Innen/inner ∅ 12 mm
4	**49900**	1 273 126	✓		✓	✓			✓	✓		M18X1,5RHT **TRW**
5	**33917**	1 329 655	✓		✓	✓			✓	✓		
6	**19937HPS**	9 492 837	✓		✓	✓			✓	✓		
7	**19938**	3 530 304-9		✓	✓	✓			✓	✓		
8	**49918**	9140788F	✓		✓	✓			✓	✓		**TRW**
9	**49942**	9140 504	✓		✓	✓			✓	✓		M14x1,5RHT 250,0 mm **CAM**
10	**49943**	1 387 356	✓		✓	✓			✓	✓		M14x2,0RHT **ZF**

VOLVO S40 I (VS) — 07/95→12/03
VOLVO V40 (VW) — 07/95→

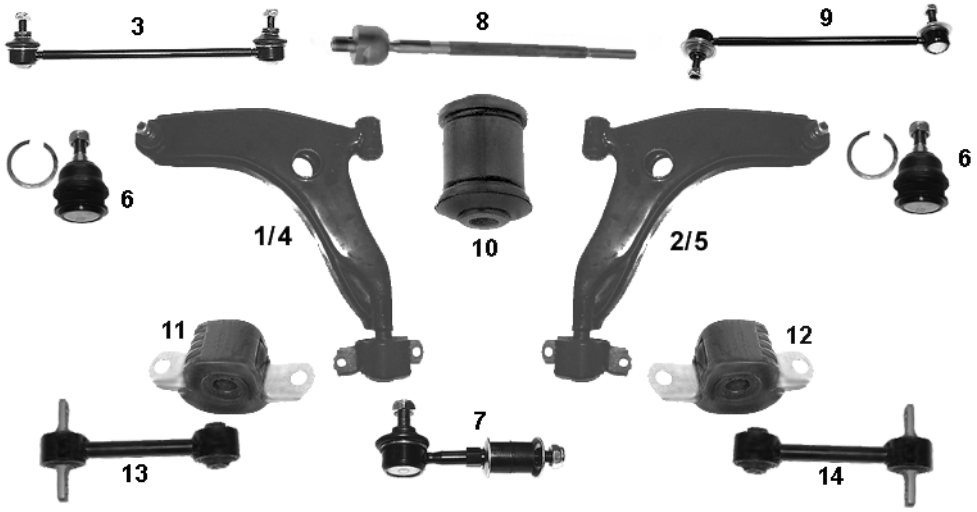

NR	MAPCO	REF								NEW	INFO
1	**49907**	30887025	✓		✓				✓	✓		01/98→12/00
2	**49908**	30887033	✓			✓			✓	✓		01/98→12/00
3	**49905HPS**	30871770	✓		✓	✓			✓	✓		→12/00
4	**49544**	30889962	✓		✓				✓	✓		→ 12/97
5	**49545**	30889963	✓			✓			✓	✓		→ 12/97
6	**49578**	30863990	✓		✓	✓			✓	✓		
7	**49909**	30852103		✓	✓	✓			✓	✓		
8	**49910**	3345797	✓		✓	✓			✓	✓		M12x1,5RHT
9	**59664HPS**	8623576	✓		✓	✓			✓	✓		
10	**33924**	30818467	✓		✓	✓			✓	✓		
11	**33551/1**	30872510	✓		✓				✓	✓		
12	**33550/1**	30872511	✓			✓			✓	✓		
13	**49956**	30818091		✓	✓		✓		✓	✓		
14	**49957**	30620785		✓		✓	✓		✓	✓		

VOLVO S40
VOLVO V40

2001→2003

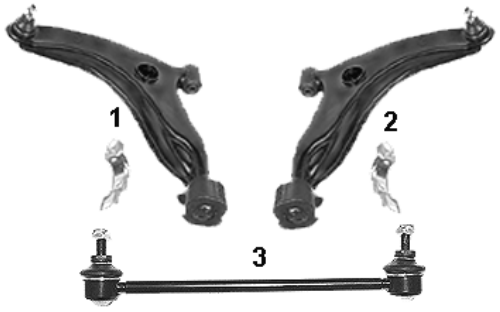

NR	MAPCO	REF								NEW	INFO
1	**49919**	30887653	✓		✓				✓	✓		
2	**49920**	30887654	✓			✓			✓	✓		
3	**49947HPS**	30884179	✓		✓	✓			✓	✓		267 mm

VOLVO S40 II
VOLVO V50

01/04→
04/04→



NR	MAPCO	REF								NEW	INFO
1	**59664HPS**	8623576	✓		✓				✓	✓		
2	**59668**	30683067		✓	✓	✓			✓	✓		
3	**59646**	8671921		✓	✓	✓			✓	✓		
4	**51602**	30714126	✓		✓			✓	✓	✓		
5	**51603**	30714127	✓			✓		✓	✓	✓		

VOLVO S60 11/00→

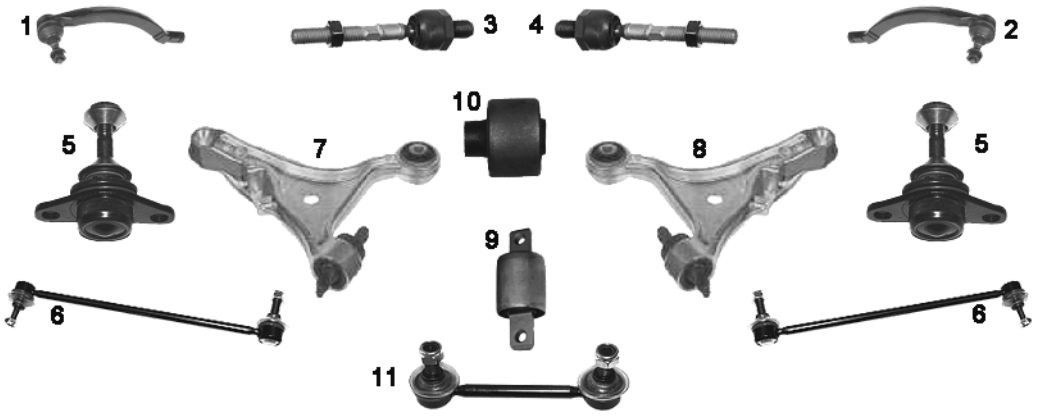

NR	MAPCO	REF			←	→	↑	↓			NEW	INFO
1	**49921**	274 175	✓		✓				✓	✓		
2	**49922**	274 176	✓			✓			✓	✓		
3	**49923**	272 428	✓		✓	✓			✓	✓		M14x2,0 157mm
4	**49927**	274 179	✓		✓	✓			✓	✓		→12/03 SMI M14x1,5 148mm
5	**49924**	274 186	✓		✓	✓			✓	✓		
6	**49906HPS**	274 303	✓		✓	✓			✓	✓		
7	**49962**	3063 5229	✓		✓			✓	✓	✓	✓	LEA
8	**49963**	3063 5230	✓			✓		✓	✓	✓	✓	LEA
9	**33995**	917 3618	✓		✓	✓		✓	✓	✓	✓	
10	**33996**	863 0604	✓		✓	✓		✓	✓	✓	✓	
11	**49916HPS**	8672446		✓	✓	✓			✓	✓		

VOLVO XC60 05/08→



NR	MAPCO	REF			←	→	↑	↓			NEW	INFO
1	**51619**	3130 2344	✓		✓				✓	✓	✓	M18x1,5
2	**51620**	3130 2345	✓			✓			✓	✓	✓	M18x1,5

VOLVO C70 , S70
VOLVO V70 I (P80_)

01/97→11/00
11/96→05/00

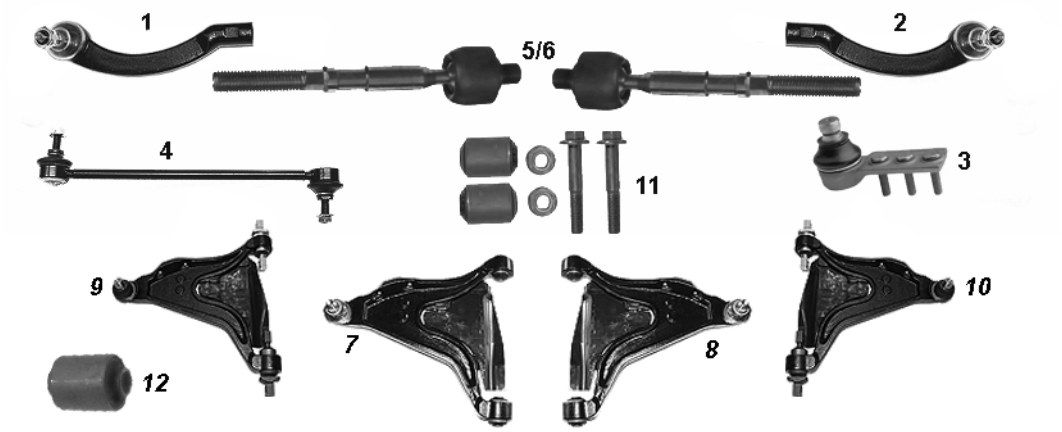

NR	MAPCO	REF									NEW	INFO
1	**19910**	271598.5	✓		✓				✓	✓		M14x2,0RHT
2	**19911**	271599.3	✓			✓			✓	✓		M14x2,0RHT
3	**19912**	271591.0	✓		✓	✓			✓	✓		
4	**19914HPS**	1387860	✓		✓	✓			✓	✓		
5	**49917**	3546266	✓		✓	✓			✓	✓		→ 2000 **TRW**
6	**49954**	9191410	✓		✓	✓			✓	✓		203 mm **SMI**
7	**49912**	271901	✓		✓				✓	✓		STOP **Turbo**
8	**49913**	271902	✓			✓			✓	✓		STOP **Turbo**
9	**49914**	272336	✓		✓				✓	✓		✓**Turbo**
10	**49915**	272337	✓			✓			✓	✓		✓**Turbo**
11	**36975**	271631	✓		✓	✓			✓	✓		**KIT**
12	**36976**	6800251	✓		✓	✓			✓	✓		

VOLVO V70 II (P80_) 03/00→

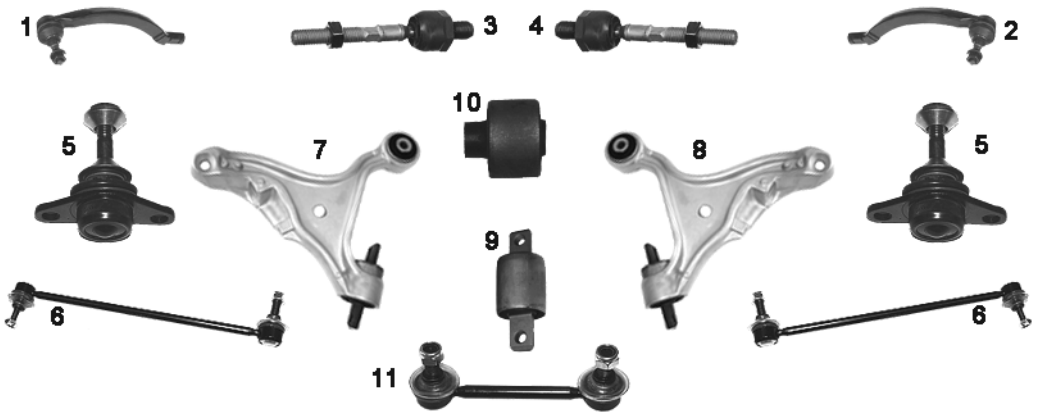

NR	MAPCO	REF								NEW	INFO
1	**49921**	274175	✓		✓				✓	✓		
2	**49922**	274176	✓			✓			✓	✓		
3	**49923**	272428	✓		✓	✓			✓	✓		M14x2,0 157mm
4	**49927**	274179	✓		✓	✓			✓	✓		→12/03 SMI M14x1,5 148mm
5	**49924**	274186	✓		✓	✓			✓	✓		
6	**49906HPS**	274303	✓		✓	✓			✓	✓		
7	**49962**	30635229	✓		✓			✓	✓	✓	✓	
8	**49963**	30635230	✓			✓		✓	✓	✓	✓	
9	**33995**	9173618	✓		✓	✓		✓	✓	✓	✓	
10	**33996**	8630604	✓		✓	✓		✓	✓	✓	✓	
11	**49916HPS**	8672446		✓	✓	✓			✓	✓		

VOLVO XC70 CROSS COUNTRY 09/02→

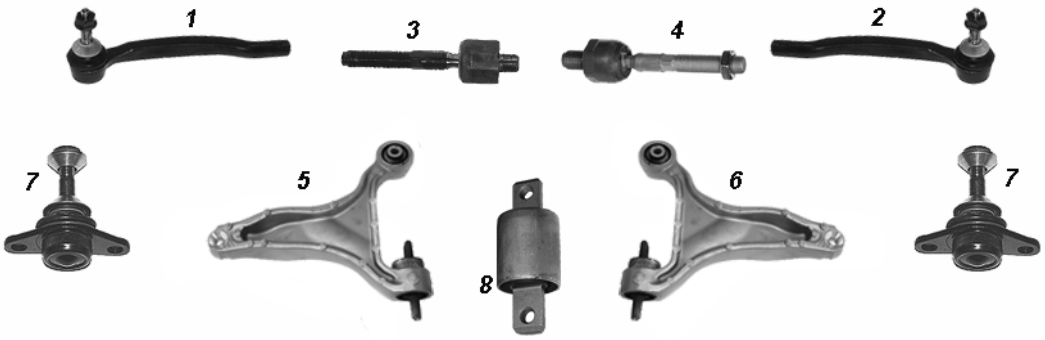

NR	MAPCO	REF								NEW	INFO
1	**49965**	31201228	✓		✓				✓	✓	✓	
2	**49966**	31201229	✓			✓			✓	✓	✓	
3	**49964**	274353	✓		✓	✓			✓	✓	✓	01/04→ ZF M14x1,5
4	**49927**	274179	✓		✓	✓			✓	✓		→12/03 SMI M14x1,5 148mm
5	**49960**	30635231	✓		✓			✓	✓	✓	✓	
6	**49961**	30635232	✓			✓		✓	✓	✓	✓	
7	**49924**	274187	✓		✓	✓			✓	✓		
8	**33995**	9173618	✓		✓	✓		✓	✓	✓	✓	

VOLVO V70 III 08/07→

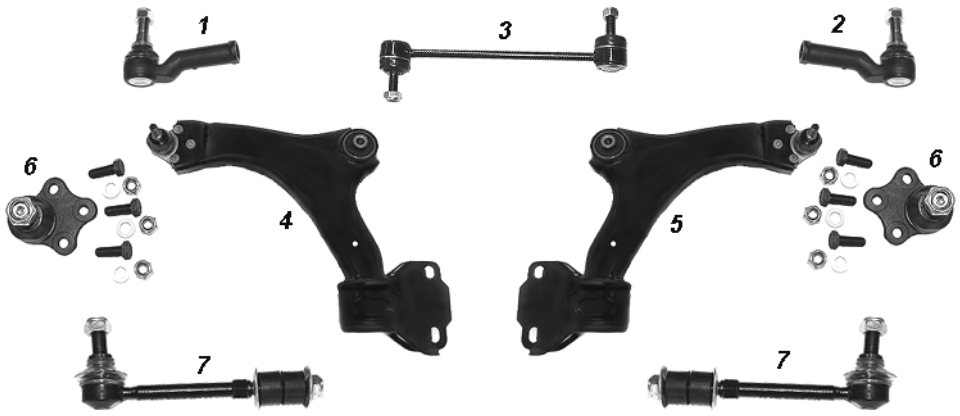

NR	MAPCO	REF									NEW	INFO
1	**51619**	3130 2344	✓ ✓		✓				✓	✓	✓	M18x1,5
2	**51620**	3130 2345	✓			✓			✓	✓	✓	M18x1,5
3	**51621**	3064 8461	✓		✓	✓			✓	✓	✓	
4	**51622**	3127 7343	✓		✓				✓	✓	✓	
5	**51623**	3127 7344	✓			✓			✓	✓	✓	
6	**51624**	No OE ref	✓		✓	✓			✓	✓	✓	
7	**51625**	3076 0678		✓	✓	✓			✓	✓	✓	

VOLVO XC70 II 08/07→



NR	MAPCO	REF									NEW	INFO
1	**51619**	3130 2344	✓ ✓		✓				✓	✓	✓	M18x1,5
2	**51620**	3130 2345	✓			✓			✓	✓	✓	M18x1,5
3	**51625**	3076 0678		✓	✓	✓			✓	✓	✓	

VOLVO S80 (TS, XY) 05/98→ 07/06

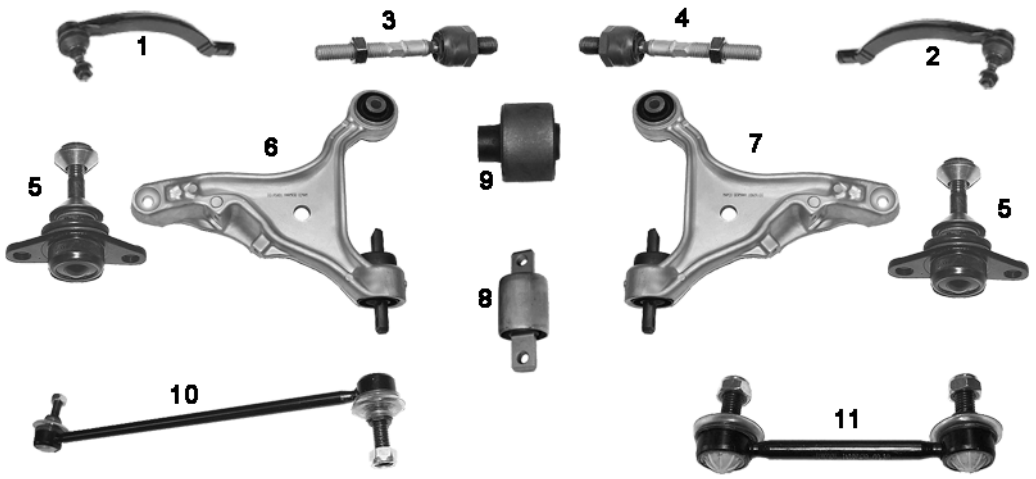

NR	MAPCO	REF			←	→	↑	↓			NEW	INFO
1	**49921**	274 175	✓		✓				✓	✓		
2	**49922**	274 176	✓			✓			✓	✓		
3	**49923**	272 428	✓		✓	✓			✓	✓		M14x2,0 157mm
4	**49927**	274 179	✓		✓	✓			✓	✓		→12/03 SMI M14x1,5 148mm
5	**49924**	274 187	✓		✓	✓			✓	✓		
6	**49958**	3063 5227	✓		✓			✓	✓	✓	✓	
7	**49959**	3063 5228	✓			✓		✓	✓	✓	✓	
8	**33995**	917 3618	✓		✓	✓		✓	✓	✓	✓	
9	**33996**	863 0604	✓		✓	✓		✓	✓	✓	✓	
10	**49906HPS**	274 303	✓		✓	✓			✓	✓		335mm
11	**49916HPS**	867 2446		✓	✓	✓			✓	✓		

VOLVO S80 II 03/06→

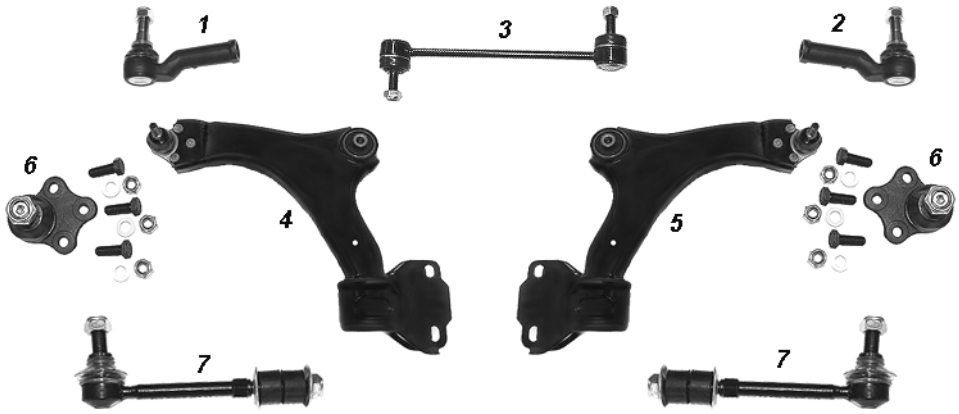

NR	MAPCO	REF			←	→	↑	↓			NEW	INFO
1	**51619**	3130 2344	✓		✓				✓	✓	✓	M18x1,5
2	**51620**	3130 2345	✓			✓			✓	✓	✓	M18x1,5
3	**51621**	3064 8461	✓		✓	✓			✓	✓	✓	
4	**51622**	3127 7343	✓		✓				✓	✓	✓	
5	**51623**	3127 7344	✓			✓			✓	✓	✓	
6	**51624**	No OE ref	✓		✓	✓			✓	✓	✓	
7	**51625**	3076 0678		✓	✓	✓			✓	✓	✓	

VOLVO S90
VOLVO V90

01/97→ 05/98
01/97→12/98

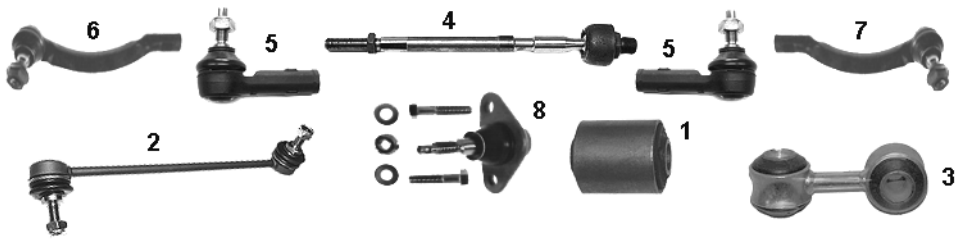

NR	MAPCO	REF			←	→	↑	↓			NEW	INFO
1	**33917**	1 329 655	✓		✓	✓			✓	✓		✓2.9 24V
2	**19937HPS**	9 492 837	✓		✓	✓			✓	✓		
3	**19938**	3 530 304-9		✓	✓	✓			✓	✓		
4	**49918**	9 140 788F	✓		✓	✓			✓	✓		**TRW**
5	**19906**	3516 944	✓		✓	✓			✓	✓		✓2.9Lt 24V 1997-> 1998
6	**19910**	3546 267	✓		✓				✓	✓		
7	**19911**	3546 268	✓			✓			✓	✓		
8	**19907**	270 477	✓		✓	✓			✓	✓		

VOLVO XC 90

10/02→

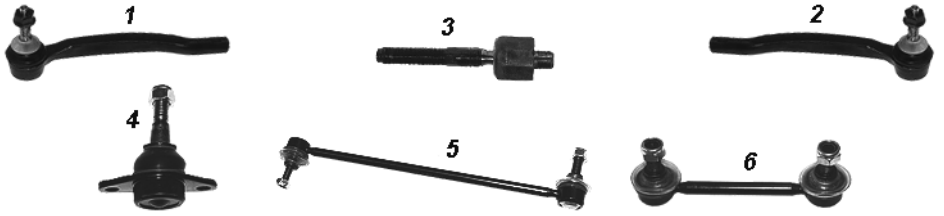

NR	MAPCO	REF			←	→	↑	↓			NEW	INFO
1	**49965**	3120 1228	✓		✓				✓	✓	✓	
2	**49966**	3120 1229	✓			✓			✓	✓	✓	
3	**49964**	274 353	✓		✓	✓			✓	✓	✓	ZF M14x1,5
4	**49955**	274 523	✓		✓	✓			✓	✓	✓	
5	**49906HPS**	274 303	✓		✓	✓			✓	✓		
6	**49916HPS**	867 2446		✓	✓	✓			✓	✓		

19007	**Spurstangenkopf, Tie Rod End, Rotule de barre de connexion**
	ALFA ROMEO 164 (164)
19008	**Trag-/Führungsgelenk, Ball Joint, Rotule de suspension**
	ALFA ROMEO 164 (164),FIAT CROMA (154)
19009	**Lenker, Radaufhängung, Track Control Arm, Bras de liaison, suspension de roue**
	ALFA ROMEO GTV (916C_),SPIDER (916S_),145 (930),146 (930),155 (167),FIAT BRAVO (182),COUPE (FA/175),MAREA Weekend (185),MAREA (185)
19010	**Lenker, Radaufhängung, Track Control Arm, Bras de liaison, suspension de roue**
	ALFA ROMEO GTV (916C_),SPIDER (916S_),145 (930),146 (930),155 (167),FIAT BRAVO (182),COUPE (FA/175),MAREA Weekend (185),MAREA (185)
19013	**Spurstangenkopf, Tie Rod End, Rotule de barre de connexion**
	ALFA ROMEO 145 (930),146 (930),155 (167)
19014	**Spurstangenkopf, Tie Rod End, Rotule de barre de connexion**
	ALFA ROMEO 145 (930),146 (930),155 (167)
19015	**Spurstangenkopf, Tie Rod End, Rotule de barre de connexion**
	ALFA ROMEO GTV (916C_),SPIDER (916S_),FIAT MAREA Weekend (185),MAREA (185),MULTIPLA (186)
19016	**Axialgelenk, Spurstange, Inner Tie Rod, Rotule de direction intérieure, barre de connexion**
	ALFA ROMEO 145 (930),146 (930),155 (167)
19017	**Axialgelenk, Spurstange, Inner Tie Rod, Rotule de direction intérieure, barre de connexion**
	ALFA ROMEO 155 (167)
19018	**Axialgelenk, Spurstange, Inner Tie Rod, Rotule de direction intérieure, barre de connexion**
	ALFA ROMEO GT,147 (937),156 Sportwagon (932),156 (932)
19020	**Lenker, Radaufhängung, Track Control Arm, Bras de liaison, suspension de roue**
	ALFA ROMEO 164 (164),FIAT CROMA (154),LANCIA THEMA SW (834),THEMA (834)
19021	**Lenker, Radaufhängung, Track Control Arm, Bras de liaison, suspension de roue**
	ALFA ROMEO 164 (164),FIAT CROMA (154),LANCIA THEMA SW (834),THEMA (834)
19022	**Axialgelenk, Spurstange, Inner Tie Rod, Rotule de direction intérieure, barre de connexion**
	FIAT BRAVA (182),BRAVO (182),TEMPRA S.W. (159),TEMPRA (159),TIPO (160),LANCIA DELTA II (836)
19022/1	**Spurstange, Rod Assembly, Barre de connexion**
	FIAT BRAVA (182),BRAVO (182),TEMPRA S.W. (159),TEMPRA (159),TIPO (160),LANCIA DEDRA SW (835),DEDRA (835),DELTA II (836)
19022/2	**Spurstange, Rod Assembly, Barre de connexion**
	ALFA ROMEO GTV (916C_),SPIDER (916S_),155 (167),FIAT BRAVA (182),BRAVO (182),COUPE (FA/175),MAREA Weekend (185),MAREA (185),TEMPRA S.W. (159),TEMPRA (159),TIPO (160),LANCIA DEDRA SW (835),DEDRA (835),DELTA II (836)
19023	**Axialgelenk, Spurstange, Inner Tie Rod, Rotule de direction intérieure, barre de connexion**
	CITROËN EVASION (22, U6),JUMPER Bus (230P),JUMPER Kasten (230L),JUMPER Pritsche/Fahrgestell (230),JUMPY Kasten (BS_, BT_, BY_, BZ_),JUMPY Pritsche/Fahrgestell (BU_, BV_, BW_, BX_),JUMPY (U6U),FIAT MAREA Weekend (185),MAREA (185),MULTIPLA (186),SCUDO Combinato (220P),SCUDO Kasten (220L),ULYSSE (220),LANCIA ZETA (220),PEUGEOT EXPERT Kasten (222),EXPERT Pritsche/Fahrgestell (223),EXPERT (224),806 (221)
19023/1	**Spurstange, Rod Assembly, Barre de connexion**
	FIAT COUPE (FA/175),MAREA Weekend (185),MAREA (185),MULTIPLA (186),LANCIA DEDRA SW (835),DEDRA (835)
19024	**Axialgelenk, Spurstange, Inner Tie Rod, Rotule de direction intérieure, barre de connexion**
	FIAT PUNTO Van (188AX),PUNTO (188)
19025	**Lenker, Radaufhängung, Track Control Arm, Bras de liaison, suspension de roue**
	AUTOBIANCHI A 112,FIAT FIORINO Pick up (147),FIORINO (127),FIORINO (147),127,127 Panorama,128,128 Coupe,128 Familiare,147,147 Panorama,LANCIA A 112,SEAT FURA (025A),ZASTAVA YUGO,YUGO FLORIDA,101 (1100)
19026HPS	**Stange/Strebe, Stabilisator, Link Stabiliser, Entretoise/tige, stabilisateur**
	FIAT MAREA Weekend (185),MAREA (185),MULTIPLA (186),LANCIA DEDRA SW (835),DEDRA (835),DELTA I (831AB0),DELTA II (836),LYBRA SW (839BX),LYBRA (839AX),PRISMA (831AB0),THEMA SW (834),THEMA (834)
19028HPS	**Stange/Strebe, Stabilisator, Link Stabiliser, Entretoise/tige, stabilisateur**
	FIAT BRAVO,STILO Multi Wagon (192),STILO (192),500,FORD KA
19029	**Spurstangenkopf, Tie Rod End, Rotule de barre de connexion**
	ALFA ROMEO GT,147 (937),156 Sportwagon (932),156 (932),166 (936)
19030	**Spurstangenkopf, Tie Rod End, Rotule de barre de connexion**
	ALFA ROMEO GT,147 (937),156 Sportwagon (932),156 (932),166 (936)
19031	**Lenker, Radaufhängung, Track Control Arm, Bras de liaison, suspension de roue**
	ALFA ROMEO 166 (936)
19032	**Lenker, Radaufhängung, Track Control Arm, Bras de liaison, suspension de roue**
	ALFA ROMEO 166 (936)
19040	**Spurstangenkopf, Tie Rod End, Rotule de barre de connexion**
	FIAT REGATA Weekend,REGATA (138),RITMO Bertone Cabriolet,RITMO I (138A),RITMO II (138A),STRADA (178E),SEAT IBIZA I (021A),MALAGA (023A),RONDA (022A)
19041	**Lenker, Radaufhängung, Track Control Arm, Bras de liaison, suspension de roue**
	FIAT REGATA Weekend,REGATA (138),RITMO Bertone Cabriolet,RITMO I (138A),RITMO II (138A),128,128 Coupe,128 Familiare,SEAT FURA (025A),IBIZA I (021A),MALAGA (023A),RONDA (022A),ZASTAVA YUGO,YUGO FLORIDA,101 (1100)

19042 **Spurstangenkopf, Tie Rod End, Rotule de barre de connexion**

AUTOBIANCHI A 112,FIAT CINQUECENTO (170),REGATA Weekend,REGATA (138),RITMO Bertone Cabriolet,RITMO I (138A),RITMO II (138A),SEICENTO Van (187),SEICENTO (187),127,LANCIA A 112,SEAT IBIZA I (021A),MALAGA (023A),RONDA (022A)

19043 **Axialgelenk, Spurstange, Inner Tie Rod, Rotule de direction intérieure, barre de connexion**

FIAT TEMPRA S.W. (159),TEMPRA (159),TIPO (160),UNO (146A/E),131,LANCIA DELTA II (836),SEAT IBIZA I (021A),MALAGA (023A),RONDA (022A)

19044 **Trag-/Führungsgelenk, Ball Joint, Rotule de suspension**

FIAT DUNA Weekend (146 B),DUNA (146 B),PANDA Van (141_),PANDA (141A_),UNO (146A/E),LANCIA Y10 (156),SEAT MARBELLA Kasten (028A),MARBELLA (28),TERRA Kasten (024A),TERRA (24)

19045 **Lenker, Radaufhängung, Track Control Arm, Bras de liaison, suspension de roue**

AUTOBIANCHI Y10,FIAT PANDA Van (141_),PANDA (141A_),LANCIA Y10 (156),SEAT MARBELLA Kasten (028A),MARBELLA (28),TERRA Kasten (024A),TERRA (24)

19046 **Spurstangenkopf, Tie Rod End, Rotule de barre de connexion**

FIAT PANDA Van (141_),PANDA (141A_),SEAT MARBELLA Kasten (028A),MARBELLA (28),TERRA Kasten (024A),TERRA (24)

19047 **Spurstangenkopf, Tie Rod End, Rotule de barre de connexion**

FIAT DUNA Weekend (146 B),DUNA (146 B),FIORINO Pick up (147),FIORINO (127),FIORINO (147),UNO (146A/E),127,127 Panorama,LANCIA Y10 (156)

19048 **Lenker, Radaufhängung, Track Control Arm, Bras de liaison, suspension de roue**

FIAT PANDA Van (141_),PANDA (141A_),LANCIA Y10 (156),SEAT MARBELLA Kasten (028A),MARBELLA (28),TERRA Kasten (024A),TERRA (24)

19049/1 **Spurstange, Rod Assembly, Barre de connexion**

ALFA ROMEO 155 (167),FIAT BRAVA (182),BRAVO (182),COUPE (FA/175),TEMPRA S.W. (159),TEMPRA (159),TIPO (160),UNO (146A/E),LANCIA DEDRA SW (835),DEDRA (835),DELTA I (831AB0),DELTA II (836)

19049/2 **Spurstange, Rod Assembly, Barre de connexion**

ALFA ROMEO 155 (167),FIAT BRAVA (182),BRAVO (182),COUPE (FA/175),TEMPRA S.W. (159),TEMPRA (159),TIPO (160),UNO (146A/E),LANCIA DEDRA SW (835),DEDRA (835),DELTA I (831AB0),DELTA II (836)

19050 **Lenker, Radaufhängung, Track Control Arm, Bras de liaison, suspension de roue**

FIAT DUNA Weekend (146 B),DUNA (146 B),ELBA (146_),UNO (146A/E)

19051 **Lenker, Radaufhängung, Track Control Arm, Bras de liaison, suspension de roue**

FIAT DUNA Weekend (146 B),DUNA (146 B),ELBA (146_),UNO (146A/E)

19052 **Spurstangenkopf, Tie Rod End, Rotule de barre de connexion**

ALFA ROMEO 155 (167),FIAT BRAVA (182),BRAVO (182),COUPE (FA/175),TEMPRA S.W. (159),TEMPRA (159),TIPO (160),LANCIA DEDRA SW (835),DEDRA (835),DELTA II (836)

19053 **Spurstangenkopf, Tie Rod End, Rotule de barre de connexion**

ALFA ROMEO 155 (167),FIAT BRAVA (182),BRAVO (182),COUPE (FA/175),MAREA Weekend (185),MAREA (185),TEMPRA S.W. (159),TEMPRA (159),TIPO (160),LANCIA DEDRA SW (835),DEDRA (835),DELTA II (836)

19054 **Lenker, Radaufhängung, Track Control Arm, Bras de liaison, suspension de roue**

FIAT TEMPRA S.W. (159),TEMPRA (159),TIPO (160),LANCIA DEDRA SW (835),DEDRA (835)

19055 **Lenker, Radaufhängung, Track Control Arm, Bras de liaison, suspension de roue**

FIAT TEMPRA S.W. (159),TEMPRA (159),TIPO (160),LANCIA DEDRA SW (835),DEDRA (835)

19056 **Lenker, Radaufhängung, Track Control Arm, Bras de liaison, suspension de roue**

FIAT BRAVA (182),BRAVO (182),TEMPRA S.W. (159),TEMPRA (159),TIPO (160),LANCIA DEDRA SW (835),DEDRA (835),DELTA II (836)

19057 **Lenker, Radaufhängung, Track Control Arm, Bras de liaison, suspension de roue**

FIAT BRAVA (182),BRAVO (182),TEMPRA S.W. (159),TEMPRA (159),TIPO (160),LANCIA DEDRA SW (835),DEDRA (835),DELTA II (836)

19058 **Spurstangenkopf, Tie Rod End, Rotule de barre de connexion**

FIAT CROMA (154),LANCIA DELTA I (831AB0),DELTA II (836),KAPPA Coupe (838),KAPPA SW (838B),KAPPA (838A),THEMA SW (834),THEMA (834)

19059 **Spurstangenkopf, Tie Rod End, Rotule de barre de connexion**

FIAT CROMA (154),LANCIA KAPPA Coupe (838),KAPPA SW (838B),KAPPA (838A),THEMA SW (834),THEMA (834)

19060 **Trag-/Führungsgelenk, Ball Joint, Rotule de suspension**

ALFA ROMEO 164 (164),FIAT CROMA (154),LANCIA THEMA (834)

19064 **Lenker, Radaufhängung, Track Control Arm, Bras de liaison, suspension de roue**

SEAT IBIZA I (021A),IBIZA II (6K1),MALAGA (023A)

19065 **Spurstangenkopf, Tie Rod End, Rotule de barre de connexion**

FIAT BARCHETTA (183),PUNTO Cabriolet (176C),PUNTO Van (176L),PUNTO (176),PUNTO (188),LANCIA Y (840A),Y10 (156)

19066 **Lenker, Radaufhängung, Track Control Arm, Bras de liaison, suspension de roue**

FIAT BARCHETTA (183),PUNTO Cabriolet (176C),PUNTO Van (176L),PUNTO (176),LANCIA Y (840A)

19067 **Lenker, Radaufhängung, Track Control Arm, Bras de liaison, suspension de roue**

FIAT BARCHETTA (183),PUNTO Cabriolet (176C),PUNTO Van (176L),PUNTO (176),LANCIA Y (840A)

19068 **Axialgelenk, Spurstange, Inner Tie Rod, Rotule de direction intérieure, barre de connexion**

FIAT BARCHETTA (183),PUNTO Cabriolet (176C),PUNTO Van (176L),PUNTO (176),PUNTO (188),LANCIA Y (840A)

19069 **Axialgelenk, Spurstange, Inner Tie Rod, Rotule de direction intérieure, barre de connexion**

FIAT CINQUECENTO (170),SEICENTO (187)

19070 **Spurstangenkopf, Tie Rod End, Rotule de barre de connexion**

FIAT DUNA Weekend (146 B),DUNA (146 B),FIORINO Kasten (146 Uno)

19071 **Lenker, Radaufhängung, Track Control Arm, Bras de liaison, suspension de roue**

FIAT FIORINO Kasten (146 Uno),FIORINO Pick up (146),FIORINO Pick up (147),FIORINO (127),FIORINO (147)

19072 **Lenker, Radaufhängung, Track Control Arm, Bras de liaison, suspension de roue**

FIAT CINQUECENTO (170),SEICENTO (187)

19073 **Lenker, Radaufhängung, Track Control Arm, Bras de liaison, suspension de roue**

FIAT CINQUECENTO (170),SEICENTO (187)

19076 **Lenker, Radaufhängung, Track Control Arm, Bras de liaison, suspension de roue**

LANCIA ZETA (220)

19077 **Lenker, Radaufhängung, Track Control Arm, Bras de liaison, suspension de roue**

LANCIA ZETA (220)

19078 **Spurstangenkopf, Tie Rod End, Rotule de barre de connexion**

LANCIA ZETA (220)

19079 **Axialgelenk, Spurstange, Inner Tie Rod, Rotule de direction intérieure, barre de connexion**

FIAT BARCHETTA (183),PUNTO Cabriolet (176C),PUNTO Van (176L),PUNTO (176),PUNTO (188)

19080 **Spurstangenkopf, Tie Rod End, Rotule de barre de connexion**

LADA NADESCHDA (2120),NIVA (2121),NOVA Kombi (2104),NOVA (2105, 2108, 2109),TOSCANA (2107),1200-1500 Kombi,1200-1600

19081 **Spurstangenkopf, Tie Rod End, Rotule de barre de connexion**

LADA NOVA Kombi (2104),NOVA (2105, 2108, 2109),TOSCANA (2107),1200-1500 Kombi,1200-1600

19082 **Spurstangenkopf, Tie Rod End, Rotule de barre de connexion**

LADA NOVA Kombi (2104),NOVA (2105, 2108, 2109),TOSCANA (2107),1200-1500 Kombi,1200-1600

19084 **Trag-/Führungsgelenk, Ball Joint, Rotule de suspension**

LADA NIVA (2121),NOVA Kombi (2104),NOVA (2105, 2108, 2109),1200-1500 Kombi,1200-1600

19085 **Trag-/Führungsgelenk, Ball Joint, Rotule de suspension**

LADA NADESCHDA (2120),NIVA (2121),NOVA Kombi (2104),NOVA (2105, 2108, 2109),1200-1500 Kombi,1200-1600

19089 **Spurstangenkopf, Tie Rod End, Rotule de barre de connexion**

LADA SAMARA FORMA (21099),SAMARA (2108, 2109),TOSCANA (2107),110,111,112

19090 **Spurstangenkopf, Tie Rod End, Rotule de barre de connexion**

LADA SAMARA FORMA (21099),SAMARA (2108, 2109),TOSCANA (2107),110,111,112

19091 **Trag-/Führungsgelenk, Ball Joint, Rotule de suspension**

LADA SAMARA FORMA (21099),SAMARA (2108, 2109),TOSCANA (2107)

19092 **Spurstangenkopf, Tie Rod End, Rotule de barre de connexion**

LADA 110,111,112

19093 **Spurstangenkopf, Tie Rod End, Rotule de barre de connexion**

LADA 110,111,112

19097 **Lenker, Radaufhängung, Track Control Arm, Bras de liaison, suspension de roue**

FIAT GRANDE PUNTO (199),OPEL CORSA D

19098 **Lenker, Radaufhängung, Track Control Arm, Bras de liaison, suspension de roue**

FIAT GRANDE PUNTO (199),OPEL CORSA D

19099 **Spurstangenkopf, Tie Rod End, Rotule de barre de connexion**

CITROËN JUMPER Bus (244, Z_),JUMPER Kasten (244),JUMPER Pritsche/Fahrgestell (244),FIAT DUCATO Bus (244, Z_),DUCATO Kasten (244),DUCATO Pritsche/Fahrgestell (244),PEUGEOT BOXER Bus (244, Z_),BOXER Kasten (244),BOXER Pritsche/Fahrgestell (244)

19102 **Trag-/Führungsgelenk, Ball Joint, Rotule de suspension**

RENAULT RODEO 4,RODEO 5,RODEO 6,16 (115_),4 Kasten (R21_, R23_),4 (112_),5 Kasten (238_),5 (122_),6 (118_)

19103 **Axialgelenk, Spurstange, Inner Tie Rod, Rotule de direction intérieure, barre de connexion**

RENAULT ESPACE I (J11_),RODEO 4,RODEO 5,RODEO 6,14 (121_),16 (115_),18 Kasten,18 Variable (135_),18 (134_),4 Kasten (R21_, R23_),4 (112_),5 Kasten (238_),5 (122_),6 (118_)

19105 **Spurstangenkopf, Tie Rod End, Rotule de barre de connexion**

RENAULT ESPACE I (J11_),RODEO 5,RODEO 6,14 (121_),18 Kasten,18 Variable (135_),18 (134_),20 (127_),4 Kasten (R21_, R23_),4 (112_),5 Kasten (238_),5 (122_),6 (118_)

19106 **Spurstange, Rod Assembly, Barre de connexion**

RENAULT 11 (B/C37_),21 (B48_),21 Kasten (S48_),21 Kombi (K48_),21 Stufenheck (L48_),9 (L42_)

19107 **Spurstange, Rod Assembly, Barre de connexion**

RENAULT ESPACE I (J11_),FUEGO (136_),18 Kasten,18 Variable (135_),18 (134_),20 (127_),30 (127_)

19107/1 **Axialgelenk, Spurstange, Inner Tie Rod, Rotule de direction intérieure, barre de connexion**

RENAULT ESPACE I (J11_),FUEGO (136_),18 Kasten,18 Variable (135_),18 (134_)

19108 **Spurstangenkopf, Tie Rod End, Rotule de barre de connexion**

RENAULT ESPACE I (J11_),ESPACE II (J/S63_),ESPACE III (JE0_),FUEGO (136_),RAPID Kasten (F40_, G40_),RODEO 4,RODEO 5,RODEO 6,SUPER 5 (B/C40_),SUPER 5 Kasten (S40_),11 (B/C37_),11 Kasten (S37_),14 (121_),18 Kasten,18 Variable (135_),18 (134_),19 I (B/C53_),19 I Cabriolet (D53_),19 I Chamade (L53_),19 I Kasten (S53_),19 II (B/C53_),19 II Cabriolet (D53_, 853_),19 II Chamade (L53_),19 II Kasten (S53_),20 (127_),21 (B48_),21 Kasten (S48_),21 Kombi (K48_),21 Stufenheck (L48_),25 (B29_),30 (127_),9 (L42_)

19109 **Trag-/Führungsgelenk, Ball Joint, Rotule de suspension**

NISSAN KUBISTAR (X76),RENAULT CLIO I (B/C57_, 5/357_),CLIO I Kasten (S57_),CLIO II (BB0/1/2_, CB0/1/2_),KANGOO (KC0/1_),KANGOO Rapid (FC0/1_),MEGANE I (BA0/1_),MEGANE I Cabriolet (EA0/1_),MEGANE I Classic (LA0/1_),MEGANE I Coach (DA0/1_),MEGANE I Grandtour (KA0/1_),RAPID Kasten (F40_, G40_),SCÉNIC I (JA0/1_),SUPER 5 (B/C40_),SUPER 5 Kasten (S40_),TWINGO (C06_),TWINGO Kasten (S06_),11 (B/C37_),11 Kasten (S37_),18 (134_),19 I (B/C53_),19 I Cabriolet (D53_),19 I Chamade (L53_),19 I Kasten (S53_),19 II (B/C53_),19 II Cabriolet (D53_, 853_),19 II Chamade (L53_),19 II Kasten (S53_),21 (B48_),21 Kasten (S48_),21 Kombi (K48_),21 Stufenheck (L48_),9 (L42_)

19109/2 **Trag-/Führungsgelenk, Ball Joint, Rotule de suspension**

RENAULT MEGANE Scenic (JA0/1_),SCÉNIC I (JA0/1_)

19111 **Trag-/Führungsgelenk, Ball Joint, Rotule de suspension**

DACIA 1310 Kombi,1310 Stufenheck (U, X),RENAULT 12,12 Kasten,12 Variable (117_),15 (130_),17,18 Kasten,18 Variable (135_),18 (134_)

19112 **Trag-/Führungsgelenk, Ball Joint, Rotule de suspension**

DACIA 1310 Kombi,1310 Stufenheck (U, X),RENAULT 12,12 Kasten,12 Variable (117_),15 (130_),17,18 Kasten,18 Variable (135_),18 (134_),20 (127_)

19113 **Lenker, Radaufhängung, Track Control Arm, Bras de liaison, suspension de roue**

DACIA 1300,1300 Kombi,1310 Kombi,1310 Stufenheck (U, X),1410 Kombi,1410 Stufenheck,RENAULT 12,12 Kasten,12 Variable (117_),15 (130_),17

19114 **Lenker, Radaufhängung, Track Control Arm, Bras de liaison, suspension de roue**

RENAULT 12

19115 **Trag-/Führungsgelenk, Ball Joint, Rotule de suspension**

RENAULT ESPACE I (J11_),FUEGO (136_),18 Kasten,18 Variable (135_),18 (134_),20 (127_),30 (127_)

19116 **Trag-/Führungsgelenk, Ball Joint, Rotule de suspension**

RENAULT ESPACE I (J11_),FUEGO (136_),18 Kasten,18 Variable (135_),18 (134_),20 (127_),30 (127_)

19120HPS **Stange/Strebe, Stabilisator, Link Stabiliser, Entretoise/tige, stabilisateur**

NISSAN MICRA (K12),RENAULT CLIO III (BR0/1, CR0/1),MODUS (F/JP0_)

19121 **Axialgelenk, Spurstange, Inner Tie Rod, Rotule de direction intérieure, barre de connexion**

RENAULT 11 (B/C37_),11 Kasten (S37_),21 (B48_),21 Kasten (S48_),21 Kombi (K48_),21 Stufenheck (L48_),9 (L42_)

19122 **Trag-/Führungsgelenk, Ball Joint, Rotule de suspension**

RENAULT RODEO 4,RODEO 5,RODEO 6,4 Kasten (R21_, R23_),4 (112_),5 Kasten (238_),5 (122_),6 (118_)

19123 **Trag-/Führungsgelenk, Ball Joint, Rotule de suspension**

RENAULT RODEO 4,RODEO 5,RODEO 6,4 Kasten (R21_, R23_),4 (112_),5 Kasten (238_),5 (122_),6 (118_)

19124 **Lenker, Radaufhängung, Track Control Arm, Bras de liaison, suspension de roue**

RENAULT 11 (B/C37_),11 Kasten (S37_),21 (B48_),21 Kasten (S48_),21 Kombi (K48_),21 Stufenheck (L48_),9 (L42_)

19125 **Lenker, Radaufhängung, Track Control Arm, Bras de liaison, suspension de roue**

RENAULT 11 (B/C37_),11 Kasten (S37_),21 (B48_),21 Kasten (S48_),21 Kombi (K48_),21 Stufenheck (L48_),9 (L42_)

19126 **Spurstange, Rod Assembly, Barre de connexion**

RENAULT ESPACE II (J/S63_),25 (B29_)

19127 **Trag-/Führungsgelenk, Ball Joint, Rotule de suspension**

ALPINE A610,V6,RENAULT ESPACE I (J11_),ESPACE II (J/S63_),ESPACE III (JE0_),25 (B29_)

19128 **Trag-/Führungsgelenk, Ball Joint, Rotule de suspension**

ALPINE A610,V6,RENAULT ESPACE I (J11_),ESPACE II (J/S63_),25 (B29_)

19129 **Spurstange, Rod Assembly, Barre de connexion**

RENAULT TRAFIC Bus (TXW),TRAFIC Bus (T5, T6, T7),TRAFIC Kasten (TXX),TRAFIC Kasten (T1, T3, T4),TRAFIC Pritsche/Fahrgestell (P6)

19129/1 **Axialgelenk, Spurstange, Inner Tie Rod, Rotule de direction intérieure, barre de connexion**

OPEL ARENA Combi (THB),ARENA Kasten (TB, TF),RENAULT TRAFIC Bus (TXW),TRAFIC Bus (T5, T6, T7),TRAFIC Kasten (TXX),TRAFIC Kasten (T1, T3, T4),TRAFIC Pritsche/Fahrgestell (PXX),TRAFIC Pritsche/Fahrgestell (P6),VAUXHALL ARENA Combi,ARENA Van

19130 **Spurstangenkopf, Tie Rod End, Rotule de barre de connexion**

RENAULT 19 I (B/C53_),19 I Cabriolet (D53_),19 I Chamade (L53_),19 I Kasten (S53_),19 II (B/C53_),19 II Cabriolet (D53_, 853_),19 II Chamade (L53_),19 II Kasten (S53_)

19130/1 **Spurstangenkopf, Tie Rod End, Rotule de barre de connexion**

RENAULT 19 I (B/C53_),19 I Cabriolet (D53_),19 I Chamade (L53_),19 I Kasten (S53_),19 II (B/C53_),19 II Cabriolet (D53_, 853_),19 II Chamade (L53_),19 II Kasten (S53_)

19131 **Spurstangenkopf, Tie Rod End, Rotule de barre de connexion**

RENAULT 21 (B48_),21 Kasten (S48_),21 Kombi (K48_),21 Stufenheck (L48_)

19132 **Trag-/Führungsgelenk, Ball Joint, Rotule de suspension**

RENAULT 21 (B48_),21 Kasten (S48_),21 Kombi (K48_),21 Stufenheck (L48_)

19133 **Spurstangenkopf, Tie Rod End, Rotule de barre de connexion**

RENAULT CLIO I (B/C57_, 5/357_),CLIO I Kasten (S57_)

19134 **Spurstangenkopf, Tie Rod End, Rotule de barre de connexion**

RENAULT CLIO I (B/C57_, 5/357_),CLIO I Kasten (S57_)

19135 **Trag-/Führungsgelenk, Ball Joint, Rotule de suspension**

OPEL ARENA Combi (THB),ARENA Kasten (TB, TF),RENAULT TRAFIC Bus (TXW),TRAFIC Bus (T5, T6, T7),TRAFIC II Bus (JL),TRAFIC II Kasten (FL),TRAFIC Kasten (TXX),TRAFIC Kasten (T1, T3, T4),TRAFIC Pritsche/Fahrgestell (PXX),TRAFIC Pritsche/Fahrgestell (P6),VAUXHALL ARENA Van

19136 **Spurstangenkopf, Tie Rod End, Rotule de barre de connexion**

OPEL ARENA Combi (THB),ARENA Kasten (TB, TF),RENAULT TRAFIC Bus (TXW),TRAFIC Bus (T5, T6, T7),TRAFIC II Bus (JL),TRAFIC II Kasten (FL),TRAFIC Kasten (TXX),TRAFIC Kasten (T1, T3, T4),TRAFIC Pritsche/Fahrgestell (PXX),TRAFIC Pritsche/Fahrgestell (P6),VAUXHALL ARENA Combi,ARENA Van

19137 **Lenker, Radaufhängung, Track Control Arm, Bras de liaison, suspension de roue**

RENAULT CLIO I (B/C57_, 5/357_)

19138 **Lenker, Radaufhängung, Track Control Arm, Bras de liaison, suspension de roue**

RENAULT CLIO I (B/C57_, 5/357_)

19139 **Spurstangenkopf, Tie Rod End, Rotule de barre de connexion**

RENAULT TWINGO (C06_)

19140 **Spurstangenkopf, Tie Rod End, Rotule de barre de connexion**

RENAULT TWINGO (C06_)

19141 **Spurstangenkopf, Tie Rod End, Rotule de barre de connexion**

RENAULT LAGUNA (B56_, 556_),LAGUNA Grandtour (K56_)

19142 **Spurstangenkopf, Tie Rod End, Rotule de barre de connexion**

RENAULT LAGUNA (B56_, 556_),LAGUNA Grandtour (K56_)

19143 **Trag-/Führungsgelenk, Ball Joint, Rotule de suspension**

RENAULT LAGUNA (B56_, 556_),LAGUNA Grandtour (K56_),SAFRANE I (B54_),SAFRANE II (B54_)

19144 **Spurstangenkopf, Tie Rod End, Rotule de barre de connexion**

RENAULT SAFRANE I (B54_),SAFRANE II (B54_)

19145 **Spurstangenkopf, Tie Rod End, Rotule de barre de connexion**

RENAULT SAFRANE I (B54_),SAFRANE II (B54_)

19147 **Lenker, Radaufhängung, Track Control Arm, Bras de liaison, suspension de roue**

RENAULT MEGANE I (BA0/1_),MEGANE I Cabriolet (EA0/1_),MEGANE I Classic (LA0/1_),MEGANE I Coach (DA0/1_),MEGANE I Grandtour (KA0/1_),MEGANE Scenic (JA0/1_),19 I (B/C53_),19 I Cabriolet (D53_),19 I Chamade (L53_),19 I Kasten (S53_),19 II (B/C53_),19 II Cabriolet (D53_, 853_),19 II Chamade (L53_),19 II Kasten (S53_)

19148 **Lenker, Radaufhängung, Track Control Arm, Bras de liaison, suspension de roue**

RENAULT MEGANE I (BA0/1_),MEGANE I Cabriolet (EA0/1_),MEGANE I Classic (LA0/1_),MEGANE I Coach (DA0/1_),MEGANE I Grandtour (KA0/1_),MEGANE Scenic (JA0/1_),19 I (B/C53_),19 I Cabriolet (D53_),19 I Chamade (L53_),19 I Kasten (S53_),19 II (B/C53_),19 II Cabriolet (D53_, 853_),19 II Chamade (L53_),19 II Kasten (S53_)

19149 **Axialgelenk, Spurstange, Inner Tie Rod, Rotule de direction intérieure, barre de connexion**

RENAULT TWINGO (C06_),TWINGO Kasten (S06_)

19150 **Spurstange, Rod Assembly, Barre de connexion**

RENAULT 19 I (B/C53_),19 I Cabriolet (D53_),19 I Chamade (L53_),19 I Kasten (S53_),19 II (B/C53_),19 II Cabriolet (D53_, 853_),19 II Chamade (L53_),19 II Kasten (S53_)

19150/1 **Axialgelenk, Spurstange, Inner Tie Rod, Rotule de direction intérieure, barre de connexion**

RENAULT 19 I (B/C53_),19 I Cabriolet (D53_),19 I Chamade (L53_),19 I Kasten (S53_),19 II (B/C53_),19 II Cabriolet (D53_, 853_),19 II Chamade (L53_),19 II Kasten (S53_)

19151 **Spurstange, Rod Assembly, Barre de connexion**

RENAULT 19 I (B/C53_),19 I Cabriolet (D53_),19 I Chamade (L53_),19 I Kasten (S53_),19 II (B/C53_),19 II Cabriolet (D53_, 853_),19 II Chamade (L53_),19 II Kasten (S53_)

19152 **Axialgelenk, Spurstange, Inner Tie Rod, Rotule de direction intérieure, barre de connexion**

RENAULT CLIO I (B/C57_, 5/357_),CLIO I Kasten (S57_)

19153 **Spurstange, Rod Assembly, Barre de connexion**

RENAULT CLIO I (B/C57_, 5/357_),CLIO I Kasten (S57_)

19154 **Spurstange, Rod Assembly, Barre de connexion**

RENAULT CLIO I (B/C57_, 5/357_),CLIO I Kasten (S57_)

19155 **Spurstange, Rod Assembly, Barre de connexion**

RENAULT CLIO I (B/C57_, 5/357_)

19156 **Spurstange, Rod Assembly, Barre de connexion**

RENAULT LAGUNA (B56_, 556_),LAGUNA Grandtour (K56_)

19156/1 **Axialgelenk, Spurstange, Inner Tie Rod, Rotule de direction intérieure, barre de connexion**

RENAULT LAGUNA (B56_, 556_),LAGUNA Grandtour (K56_)

19157 **Lenker, Radaufhängung, Track Control Arm, Bras de liaison, suspension de roue**

RENAULT TWINGO (C06_),TWINGO Kasten (S06_)

19158 **Lenker, Radaufhängung, Track Control Arm, Bras de liaison, suspension de roue**

RENAULT TWINGO (C06_),TWINGO Kasten (S06_)

19159 **Spurstange, Rod Assembly, Barre de connexion**

RENAULT TWINGO (C06_),TWINGO Kasten (S06_)

19160 **Spurstange, Rod Assembly, Barre de connexion**

RENAULT TWINGO (C06_),TWINGO Kasten (S06_)

19161 **Spurstange, Rod Assembly, Barre de connexion**

RENAULT LAGUNA (B56_, 556_),LAGUNA Grandtour (K56_)

19162 **Lenker, Radaufhängung, Track Control Arm, Bras de liaison, suspension de roue**

RENAULT RAPID Kasten (F40_, G40_),RODEO 4,RODEO 5,SUPER 5 (B/C40_),SUPER 5 Kasten (S40_)

19163 **Lenker, Radaufhängung, Track Control Arm, Bras de liaison, suspension de roue**

RENAULT RAPID Kasten (F40_, G40_),RODEO 4,RODEO 5,SUPER 5 (B/C40_),SUPER 5 Kasten (S40_)

19164 — **Stange/Strebe, Stabilisator, Link Stabiliser, Entretoise/tige, stabilisateur**

RENAULT AVANTIME (DE0_),ESPACE III (JE0_),LAGUNA (B56_, 556_),LAGUNA Grandtour (K56_),SAFRANE I (B54_),SAFRANE II (B54_)

19164HPS — **Stange/Strebe, Stabilisator, Link Stabiliser, Entretoise/tige, stabilisateur**

RENAULT AVANTIME (DE0_),ESPACE III (JE0_),LAGUNA (B56_, 556_),LAGUNA Grandtour (K56_),SAFRANE I (B54_),SAFRANE II (B54_)

19166 — **Spurstange, Rod Assembly, Barre de connexion**

RENAULT RAPID Kasten (F40_, G40_),SUPER 5 (B/C40_),SUPER 5 Kasten (S40_)

19166/1 — **Axialgelenk, Spurstange, Inner Tie Rod, Rotule de direction intérieure, barre de connexion**

RENAULT RAPID Kasten (F40_, G40_),SUPER 5 (B/C40_)

19167 — **Lenker, Radaufhängung, Track Control Arm, Bras de liaison, suspension de roue**

RENAULT MEGANE I (BA0/1_),MEGANE I Cabriolet (EA0/1_),MEGANE I Classic (LA0/1_),MEGANE I Coach (DA0/1_),MEGANE I Grandtour (KA0/1_),SCÉNIC I (JA0/1_),19 I (B/C53_),19 I Cabriolet (D53_),19 I Chamade (L53_),19 II (B/C53_),19 II Cabriolet (D53_, 853_),19 II Chamade (L53_)

19168 — **Lenker, Radaufhängung, Track Control Arm, Bras de liaison, suspension de roue**

RENAULT MEGANE I (BA0/1_),MEGANE I Cabriolet (EA0/1_),MEGANE I Classic (LA0/1_),MEGANE I Coach (DA0/1_),MEGANE I Grandtour (KA0/1_),SCÉNIC I (JA0/1_),19 I (B/C53_),19 I Cabriolet (D53_),19 I Chamade (L53_),19 II (B/C53_),19 II Cabriolet (D53_, 853_),19 II Chamade (L53_)

19169 — **Spurstangenkopf, Tie Rod End, Rotule de barre de connexion**

RENAULT MEGANE I (BA0/1_),MEGANE I Cabriolet (EA0/1_),MEGANE I Classic (LA0/1_),MEGANE I Coach (DA0/1_),MEGANE I Grandtour (KA0/1_),MEGANE Scenic (JA0/1_),SCÉNIC I (JA0/1_)

19170 — **Spurstangenkopf, Tie Rod End, Rotule de barre de connexion**

RENAULT MEGANE I (BA0/1_),MEGANE I Cabriolet (EA0/1_),MEGANE I Classic (LA0/1_),MEGANE I Coach (DA0/1_),MEGANE I Grandtour (KA0/1_),MEGANE Scenic (JA0/1_),SCÉNIC I (JA0/1_)

19171 — **Axialgelenk, Spurstange, Inner Tie Rod, Rotule de direction intérieure, barre de connexion**

RENAULT MEGANE I (BA0/1_),MEGANE I Cabriolet (EA0/1_),MEGANE I Classic (LA0/1_),MEGANE I Coach (DA0/1_),MEGANE I Grandtour (KA0/1_),MEGANE Scenic (JA0/1_),SCÉNIC I (JA0/1_)

19172 — **Spurstange, Rod Assembly, Barre de connexion**

RENAULT MEGANE I (BA0/1_),MEGANE I Cabriolet (EA0/1_),MEGANE I Classic (LA0/1_),MEGANE I Coach (DA0/1_),MEGANE I Grandtour (KA0/1_),MEGANE Scenic (JA0/1_),SCÉNIC I (JA0/1_)

19173 — **Spurstange, Rod Assembly, Barre de connexion**

RENAULT MEGANE I (BA0/1_),MEGANE I Cabriolet (EA0/1_),MEGANE I Classic (LA0/1_),MEGANE I Coach (DA0/1_),MEGANE I Grandtour (KA0/1_),MEGANE Scenic (JA0/1_),SCÉNIC I (JA0/1_)

19174 — **Axialgelenk, Spurstange, Inner Tie Rod, Rotule de direction intérieure, barre de connexion**

RENAULT CLIO I (B/C57_, 5/357_),CLIO I Kasten (S57_)

19175 — **Spurstange, Rod Assembly, Barre de connexion**

RENAULT CLIO I (B/C57_, 5/357_),CLIO I Kasten (S57_)

19176 — **Spurstange, Rod Assembly, Barre de connexion**

RENAULT CLIO I (B/C57_, 5/357_),CLIO I Kasten (S57_)

19177 — **Lenker, Radaufhängung, Track Control Arm, Bras de liaison, suspension de roue**

RENAULT LAGUNA (B56_, 556_),LAGUNA Grandtour (K56_)

19178 — **Lenker, Radaufhängung, Track Control Arm, Bras de liaison, suspension de roue**

RENAULT LAGUNA (B56_, 556_),LAGUNA Grandtour (K56_)

19180 — **Spurstangenkopf, Tie Rod End, Rotule de barre de connexion**

RENAULT KANGOO (KC0/1_),KANGOO Rapid (FC0/1_)

19181 — **Spurstangenkopf, Tie Rod End, Rotule de barre de connexion**

RENAULT KANGOO (KC0/1_),KANGOO Rapid (FC0/1_)

19182 — **Axialgelenk, Spurstange, Inner Tie Rod, Rotule de direction intérieure, barre de connexion**

RENAULT KANGOO (KC0/1_),KANGOO Rapid (FC0/1_)

19183 — **Axialgelenk, Spurstange, Inner Tie Rod, Rotule de direction intérieure, barre de connexion**

RENAULT KANGOO (KC0/1_),KANGOO Rapid (FC0/1_)

19186 — **Lenker, Radaufhängung, Track Control Arm, Bras de liaison, suspension de roue**

RENAULT SAFRANE I (B54_),SAFRANE II (B54_)

19187 — **Lenker, Radaufhängung, Track Control Arm, Bras de liaison, suspension de roue**

RENAULT SAFRANE I (B54_),SAFRANE II (B54_)

19188 — **Axialgelenk, Spurstange, Inner Tie Rod, Rotule de direction intérieure, barre de connexion**

RENAULT SAFRANE I (B54_),SAFRANE II (B54_)

19189 — **Spurstangenkopf, Tie Rod End, Rotule de barre de connexion**

RENAULT CLIO II (BB0/1/2_, CB0/1/2_)

19190 — **Spurstangenkopf, Tie Rod End, Rotule de barre de connexion**

RENAULT CLIO II (BB0/1/2_, CB0/1/2_)

19193 — **Axialgelenk, Spurstange, Inner Tie Rod, Rotule de direction intérieure, barre de connexion**

RENAULT CLIO II (BB0/1/2_, CB0/1/2_)

19194 — **Axialgelenk, Spurstange, Inner Tie Rod, Rotule de direction intérieure, barre de connexion**

RENAULT CLIO II (BB0/1/2_, CB0/1/2_),CLIO II Kasten (SB0/1/2_)

19195 — **Axialgelenk, Spurstange, Inner Tie Rod, Rotule de direction intérieure, barre de connexion**

NISSAN KUBISTAR (X76),RENAULT CLIO II (BB0/1/2_, CB0/1/2_),CLIO II Kasten (SB0/1/2_),KANGOO (KC0/1_),KANGOO Rapid (FC0/1_)

19196 **Lenker, Radaufhängung, Track Control Arm, Bras de liaison, suspension de roue**

NISSAN KUBISTAR (X76),RENAULT CLIO II (BB0/1/2_, CB0/1/2_),CLIO II Kasten (SB0/1/2_),KANGOO (KC0/1_),KANGOO Rapid (FC0/1_),THALIA (LB0/1/2_)

19197 **Lenker, Radaufhängung, Track Control Arm, Bras de liaison, suspension de roue**

NISSAN KUBISTAR (X76),RENAULT CLIO II (BB0/1/2_, CB0/1/2_),CLIO II Kasten (SB0/1/2_),KANGOO (KC0/1_),KANGOO Rapid (FC0/1_),THALIA (LB0/1/2_)

19198 **Axialgelenk, Spurstange, Inner Tie Rod, Rotule de direction intérieure, barre de connexion**

RENAULT ESPACE II (J/S63_),25 (B29_)

19204 **Trag-/Führungsgelenk, Ball Joint, Rotule de suspension**

TALBOT HORIZON,SIMCA 1100 Break/Tourisme,SIMCA 1100 Schrägheck

19206 **Reparatursatz, Querlenker, Suspension Kit, Kit de réparation, bras triangulaire**

PEUGEOT 205 I Cabriolet (741B, 20D),205 I (741A/C),205 II (20A/C),205 Kasten

19208 **Reparatursatz, Querlenker, Suspension Kit, Kit de réparation, bras triangulaire**

RENAULT CLIO II (BB0/1/2_, CB0/1/2_),CLIO II Kasten (SB0/1/2_)

19209 **Reparatursatz, Querlenker, Suspension Kit, Kit de réparation, bras triangulaire**

RENAULT CLIO I (B/C57_, 5/357_),CLIO I Kasten (S57_)

19210 **Reparatursatz, Querlenker, Suspension Kit, Kit de réparation, bras triangulaire**

RENAULT 19 I (B/C53_),19 I Cabriolet (D53_),19 I Chamade (L53_),19 I Kasten (S53_),19 II (B/C53_),19 II Cabriolet (D53_, 853_),19 II Chamade (L53_),19 II Kasten (S53_)

19211 **Reparatursatz, Querlenker, Suspension Kit, Kit de réparation, bras triangulaire**

RENAULT TWINGO (C06_),TWINGO Kasten (S06_)

19212 **Reparatursatz, Querlenker, Suspension Kit, Kit de réparation, bras triangulaire**

RENAULT LAGUNA (B56_, 556_),LAGUNA Grandtour (K56_),SAFRANE I (B54_),SAFRANE II (B54_)

19213 **Reparatursatz, Querlenker, Suspension Kit, Kit de réparation, bras triangulaire**

RENAULT 21 (B48_),21 Kasten (S48_),21 Kombi (K48_),21 Stufenheck (L48_)

19214 **Reparatursatz, Querlenker, Suspension Kit, Kit de réparation, bras triangulaire**

RENAULT 21 (B48_),21 Kasten (S48_),21 Kombi (K48_),21 Stufenheck (L48_)

19215 **Reparatursatz, Querlenker, Suspension Kit, Kit de réparation, bras triangulaire**

RENAULT SUPER 5 (B/C40_),SUPER 5 Kasten (S40_),11 (B/C37_),11 Kasten (S37_),5 Kasten (238_),5 (122_),9 (L42_)

19216 **Reparatursatz, Querlenker, Suspension Kit, Kit de réparation, bras triangulaire**

RENAULT SAFRANE I (B54_),SAFRANE II (B54_)

19217 **Reparatursatz, Querlenker, Suspension Kit, Kit de réparation, bras triangulaire**

OPEL OMEGA A Caravan (66_, 67_),OMEGA A (16_, 17_, 19_),SENATOR B (29_),VAUXHALL CARLTON Mk III,CARLTON Mk III Estate,SENATOR Mk II

19218 **Reparatursatz, Querlenker, Suspension Kit, Kit de réparation, bras triangulaire**

OPEL OMEGA A Caravan (66_, 67_),OMEGA A (16_, 17_, 19_),SENATOR B (29_),VAUXHALL CARLTON Mk III,CARLTON Mk III Estate,SENATOR Mk II

19219 **Reparatursatz, Querlenker, Suspension Kit, Kit de réparation, bras triangulaire**

PEUGEOT 306 Break (7E, N3, N5),306 Cabriolet (7D, N3, N5),306 Schrägheck (7A, 7C, N3, N5),306 (7B, N3, N5)

19220 **Reparatursatz, Querlenker, Suspension Kit, Kit de réparation, bras triangulaire**

PEUGEOT 306 Break (7E, N3, N5),306 Cabriolet (7D, N3, N5),306 Schrägheck (7A, 7C, N3, N5),306 (7B, N3, N5)

19221 **Reparatursatz, Querlenker, Suspension Kit, Kit de réparation, bras triangulaire**

OPEL OMEGA B Caravan (21_, 22_, 23_),OMEGA B (25_, 26_, 27_),VECTRA B Caravan (31_),VECTRA B CC (38_),VECTRA B (36_),VAUXHALL OMEGA,OMEGA Estate,VECTRA,VECTRA CC,VECTRA Estate

19222 **Reparatursatz, Querlenker, Suspension Kit, Kit de réparation, bras triangulaire**

PEUGEOT 405 I Break (15E),405 I (15B),405 II Break (4E),405 II (4B)

19225 **Reparatursatz, Querlenker, Suspension Kit, Kit de réparation, bras triangulaire**

PEUGEOT 406 Break (8E/F),406 Coupe (8C),406 (8B)

19228 **Reparatursatz, Querlenker, Suspension Kit, Kit de réparation, bras triangulaire**

PEUGEOT 106 I (1A, 1C),106 II (1)

19231 **Reparatursatz, Querlenker, Suspension Kit, Kit de réparation, bras triangulaire**

ALFA ROMEO 156 Sportwagon (932),156 (932)

19232 **Reparatursatz, Querlenker, Suspension Kit, Kit de réparation, bras triangulaire**

ALFA ROMEO 156 Sportwagon (932),156 (932)

19244 **Reparatursatz, Querlenker, Suspension Kit, Kit de réparation, bras triangulaire**

FIAT UNO (146A/E)

19245 **Reparatursatz, Querlenker, Suspension Kit, Kit de réparation, bras triangulaire**

CITROËN C5 Break (DE_),C5 Break (RE_),C5 (DC_),C5 (RC_)

19246 **Reparatursatz, Querlenker, Suspension Kit, Kit de réparation, bras triangulaire**

CITROËN ZX Break (N2),ZX (N2)

19247 **Reparatursatz, Querlenker, Suspension Kit, Kit de réparation, bras triangulaire**

CITROËN XSARA Break (N2),XSARA Coupe (N0),XSARA (N1),XSARA PICASSO (N68),ZX Break (N2),ZX (N2)

19248 **Reparatursatz, Querlenker, Suspension Kit, Kit de réparation, bras triangulaire**

CITROËN AX (ZA-_),SAXO (S0, S1)

19249 **Reparatursatz, Querlenker, Suspension Kit, Kit de réparation, bras triangulaire**

CITROËN AX (ZA-_)

19250 **Reparatursatz, Querlenker, Suspension Kit, Kit de réparation, bras triangulaire**

CITROËN JUMPER Bus (230P),JUMPER Kasten (230L),JUMPER Pritsche/Fahrgestell (230),FIAT DUCATO Bus (230),DUCATO Kasten (230L),DUCATO Pritsche/Fahrgestell (230),PEUGEOT BOXER Bus (230P),BOXER Kasten (230L),BOXER Pritsche/Fahrgestell (ZCT_)

19251 **Reparatursatz, Querlenker, Suspension Kit, Kit de réparation, bras triangulaire**

CITROËN JUMPER Bus (230P),JUMPER Kasten (230L),JUMPER Pritsche/Fahrgestell (230),FIAT DUCATO Bus (230),DUCATO Kasten (230L),DUCATO Pritsche/Fahrgestell (230),PEUGEOT BOXER Bus (230P),BOXER Kasten (230L),BOXER Pritsche/Fahrgestell (ZCT_)

19252 **Reparatursatz, Querlenker, Suspension Kit, Kit de réparation, bras triangulaire**

TOYOTA CARINA E Sportswagon (_T19_),CARINA E Stufenheck (_T19_),CARINA E (_T19_)

19253 **Reparatursatz, Querlenker, Suspension Kit, Kit de réparation, bras triangulaire**

TOYOTA AVENSIS Liftback (_T22_),AVENSIS Station Wagon (_T22_),AVENSIS (_T22_)

19254 **Reparatursatz, Querlenker, Suspension Kit, Kit de réparation, bras triangulaire**

FORD ESCORT V Cabriolet (ALL),ESCORT V (GAL),ESCORT V Kombi (GAL, AVL),ESCORT VI Cabriolet (ALL),ESCORT VI (GAL),ESCORT VI Kombi (GAL),ESCORT VI Stufenheck (GAL),ESCORT VII Cabriolet (ALL),ESCORT VII (GAL, AAL, ABL),ESCORT VII Kombi (GAL, ANL),ESCORT VII Stufenheck (GAL, AFL),ESCORT ´91 Express (AVL),ESCORT ´95 Express (AVL),ORION III (GAL)

19255 **Reparatursatz, Querlenker, Suspension Kit, Kit de réparation, bras triangulaire**

MITSUBISHI CARISMA (DA_),CARISMA Stufenheck (DA_)

19256 **Reparatursatz, Querlenker, Suspension Kit, Kit de réparation, bras triangulaire**

MITSUBISHI CARISMA (DA_),CARISMA Stufenheck (DA_)

19257 **Reparatursatz, Querlenker, Suspension Kit, Kit de réparation, bras triangulaire**

AUDI COUPE (81, 85),80 (80, 82, B1),80 (81, 85, B2),VW PASSAT Stufenheck (32B),PASSAT Variant (33),PASSAT (32),PASSAT (32B),SANTANA (32B)

19259 **Reparatursatz, Querlenker, Suspension Kit, Kit de réparation, bras triangulaire**

FORD MONDEO I (GBP),MONDEO I Kombi (BNP),MONDEO I Stufenheck (GBP)

19260 **Reparatursatz, Querlenker, Suspension Kit, Kit de réparation, bras triangulaire**

FORD MONDEO II (BAP),MONDEO II Kombi (BNP),MONDEO II Stufenheck (BFP)

19263 **Reparatursatz, Querlenker, Suspension Kit, Kit de réparation, bras triangulaire**

FORD COURIER Kasten (F3L, F5L),FIESTA III (GFJ),FIESTA Kasten (JV_),KA (RB_)

19265 **Reparatursatz, Querlenker, Suspension Kit, Kit de réparation, bras triangulaire**

FORD FIESTA III (GFJ)

19266 **Reparatursatz, Querlenker, Suspension Kit, Kit de réparation, bras triangulaire**

FORD GALAXY (WGR),SEAT ALHAMBRA (7V8, 7V9),VW SHARAN (7M8, 7M9, 7M6)

19267 **Reparatursatz, Querlenker, Suspension Kit, Kit de réparation, bras triangulaire**

VW TRANSPORTER T4 Bus (70XB, 70XC, 7DB, 7DW),TRANSPORTER T4 Kasten (70XA),TRANSPORTER T4 Pritsche/Fahrgestell (70XD)

19267/2 **Reparatursatz, Querlenker, Suspension Kit, Kit de réparation, bras triangulaire**

VW TRANSPORTER T4 Bus (70XB, 70XC, 7DB, 7DW),TRANSPORTER T4 Kasten (70XA),TRANSPORTER T4 Pritsche/Fahrgestell (70XD)

19268 **Reparatursatz, Querlenker, Suspension Kit, Kit de réparation, bras triangulaire**

VW TRANSPORTER T4 Bus (70XB, 70XC, 7DB, 7DW),TRANSPORTER T4 Kasten (70XA),TRANSPORTER T4 Pritsche/Fahrgestell (70XD)

19268/2 **Reparatursatz, Querlenker, Suspension Kit, Kit de réparation, bras triangulaire**

VW TRANSPORTER T4 Bus (70XB, 70XC, 7DB, 7DW),TRANSPORTER T4 Kasten (70XA),TRANSPORTER T4 Pritsche/Fahrgestell (70XD)

19269 **Reparatursatz, Querlenker, Suspension Kit, Kit de réparation, bras triangulaire**

VW TRANSPORTER T4 Bus (70XB, 70XC, 7DB, 7DW),TRANSPORTER T4 Kasten (70XA),TRANSPORTER T4 Pritsche/Fahrgestell (70XD)

19269/2 **Reparatursatz, Querlenker, Suspension Kit, Kit de réparation, bras triangulaire**

VW TRANSPORTER T4 Bus (70XB, 70XC, 7DB, 7DW),TRANSPORTER T4 Kasten (70XA),TRANSPORTER T4 Pritsche/Fahrgestell (70XD)

19270 **Reparatursatz, Querlenker, Suspension Kit, Kit de réparation, bras triangulaire**

OPEL ASTRA F Cabriolet (53_B),ASTRA F Caravan (51_, 52_),ASTRA F CC (53_, 54_, 58_, 59_),CALIBRA A (85_),VECTRA A CC (88_, 89_),VECTRA A (86_, 87_)

19271 **Reparatursatz, Querlenker, Suspension Kit, Kit de réparation, bras triangulaire**

OPEL ASTRA G Caravan (F35_),ASTRA G CC (F48_, F08_),ASTRA G Stufenheck (F69_),OMEGA B Caravan (21_, 22_, 23_),OMEGA B (25_, 26_, 27_),VECTRA B Caravan (31_),VECTRA B CC (38_),VECTRA B (36_),ZAFIRA (F75_)

19279 **Reparatursatz, Querlenker, Suspension Kit, Kit de réparation, bras triangulaire**

VW GOLF II (19E, 1G1),JETTA II (19E, 1G2)

19280 **Reparatursatz, Querlenker, Suspension Kit, Kit de réparation, bras triangulaire**

AUDI COUPE (89, 8B),80 (89, 89Q, 8A, B3),90 (89, 89Q, 8A, B3)

19281 **Reparatursatz, Querlenker, Suspension Kit, Kit de réparation, bras triangulaire**

AUDI COUPE (89, 8B),80 (89, 89Q, 8A, B3),90 (89, 89Q, 8A, B3)

19284 **Reparatursatz, Querlenker, Suspension Kit, Kit de réparation, bras triangulaire**

AUDI CABRIOLET (8G7, B4),COUPE (89, 8B),80 Avant (8C, B4),80 (8C, B4)

19285 **Reparatursatz, Querlenker, Suspension Kit, Kit de réparation, bras triangulaire**

AUDI CABRIOLET (8G7, B4),COUPE (89, 8B),80 Avant (8C, B4),80 (8C, B4)

19287 **Reparatursatz, Querlenker, Suspension Kit, Kit de réparation, bras triangulaire**

MAZDA 626 IV (GE),626 IV Hatchback (GE)

19288 **Reparatursatz, Querlenker, Suspension Kit, Kit de réparation, bras triangulaire**

MAZDA 626 IV (GE),626 IV Hatchback (GE)

19289 **Reparatursatz, Querlenker, Suspension Kit, Kit de réparation, bras triangulaire**

SEAT CORDOBA Vario (6K5),CORDOBA (6K2/C2),IBIZA II (6K1),INCA (6K9),TOLEDO I (1L),VW CADDY II Kasten (9K9A),CADDY II Pick-up (9U7),CORRADO (53I),GOLF II (19E, 1G1),GOLF III Cabriolet (1E7),GOLF III Variant (1H5),GOLF III (1H1),GOLF IV Cabriolet (1E7),JETTA II (19E, 1G2),PASSAT Variant (3A5, 35I),PASSAT (3A2, 35I),POLO CLASSIC (6KV2),POLO Variant (6KV5),VENTO (1H2)

19290 **Reparatursatz, Querlenker, Suspension Kit, Kit de réparation, bras triangulaire**

VW TRANSPORTER T4 Bus (70XB, 70XC, 7DB, 7DW),TRANSPORTER T4 Kasten (70XA),TRANSPORTER T4 Pritsche/Fahrgestell (70XD)

19291 **Reparatursatz, Querlenker, Suspension Kit, Kit de réparation, bras triangulaire**

VW TRANSPORTER T4 Bus (70XB, 70XC, 7DB, 7DW),TRANSPORTER T4 Kasten (70XA),TRANSPORTER T4 Pritsche/Fahrgestell (70XD)

19292 **Reparatursatz, Querlenker, Suspension Kit, Kit de réparation, bras triangulaire**

VW TRANSPORTER T4 Bus (70XB, 70XC, 7DB, 7DW),TRANSPORTER T4 Kasten (70XA),TRANSPORTER T4 Pritsche/Fahrgestell (70XD)

19293 **Reparatursatz, Querlenker, Suspension Kit, Kit de réparation, bras triangulaire**

AUDI COUPE (81, 85),80 (89, 89Q, 8A, B3),90 (89, 89Q, 8A, B3)

19293/1 **Reparatursatz, Querlenker, Suspension Kit, Kit de réparation, bras triangulaire**

AUDI COUPE (81, 85),80 (89, 89Q, 8A, B3),90 (89, 89Q, 8A, B3)

19294 **Reparatursatz, Querlenker, Suspension Kit, Kit de réparation, bras triangulaire**

AUDI COUPE (81, 85),80 (89, 89Q, 8A, B3),90 (89, 89Q, 8A, B3)

19294/1 **Reparatursatz, Querlenker, Suspension Kit, Kit de réparation, bras triangulaire**

AUDI COUPE (81, 85),80 (89, 89Q, 8A, B3),90 (89, 89Q, 8A, B3)

19295 **Reparatursatz, Querlenker, Suspension Kit, Kit de réparation, bras triangulaire**

SEAT AROSA (6H),VW LUPO (6X1, 6E1),POLO Kasten (6NF),POLO (6N1)

19296 **Reparatursatz, Querlenker, Suspension Kit, Kit de réparation, bras triangulaire**

SEAT AROSA (6H),VW LUPO (6X1, 6E1),POLO Kasten (6NF),POLO (6N1)

19297 **Reparatursatz, Querlenker, Suspension Kit, Kit de réparation, bras triangulaire**

AUDI 80 (89, 89Q, 8A, B3),90 (89, 89Q, 8A, B3)

19298 **Reparatursatz, Querlenker, Suspension Kit, Kit de réparation, bras triangulaire**

AUDI 80 (89, 89Q, 8A, B3),90 (89, 89Q, 8A, B3)

19299 **Reparatursatz, Querlenker, Suspension Kit, Kit de réparation, bras triangulaire**

DAEWOO NUBIRA (KLAJ),NUBIRA Stufenheck (KLAJ),NUBIRA Wagon (KLAJ)

19301 **Spurstangenkopf, Tie Rod End, Rotule de barre de connexion**

CITROËN BERLINGO Kasten (M_),BERLINGO (MF),C15 (VD-_),C4 Coupe (LA_),C4 (LC_),LNA,VISA,VISA Cabriolet,XSARA Break (N2),XSARA Coupe (N0),XSARA (N1),XSARA PICASSO (N68),ZX Break (N2),ZX (N2),PEUGEOT PARTNER Combispace (5F),PARTNER Kasten (5),104,104 Coupe,205 I Cabriolet (741B, 20D),205 I (741A/C),205 II (20A/C),205 Kasten,304 Break (_04D_),304 Cabriolet (_04B_),304 Coupe (_04C_),304 (_04M_),305 I Break (581D),305 I (581A),305 II Break (581E),305 II (581M),306 Break (7E, N3, N5),306 Cabriolet (7D, N3, N5),306 Schrägheck (7A, 7C, N3, N5),306 (7B, N3, N5),307 Break (3E),307 CC (3B),307 SW (3H),307 (3A/C),309 I (10C, 10A),309 II (3C, 3A),504 (A_, M_),504 Break (D_, F_),504 Cabriolet,504 Coupe,504 Pick-up (E_),505 Break (551D),505 (551A),604 (561A_),TALBOT SAMBA Cabriolet (51E),SAMBA (51A),TAGORA

19307 **Trag-/Führungsgelenk, Ball Joint, Rotule de suspension**

PEUGEOT 504 (A_, M_),504 Break (D_, F_),504 Cabriolet,504 Coupe,504 Pick-up (E_),505 Break (551D),505 (551A),604 (561A_),TALBOT TAGORA

19310 **Lenker, Radaufhängung, Track Control Arm, Bras de liaison, suspension de roue**

CITROËN C15 (VD-_),VISA,VISA Cabriolet,PEUGEOT 205 I Cabriolet (741B, 20D),205 I (741A/C),205 II (20A/C),205 Kasten

19311 **Lenker, Radaufhängung, Track Control Arm, Bras de liaison, suspension de roue**

CITROËN C15 (VD-_),VISA,VISA Cabriolet,PEUGEOT 205 I Cabriolet (741B, 20D),205 I (741A/C),205 II (20A/C),205 Kasten

19312 **Trag-/Führungsgelenk, Ball Joint, Rotule de suspension**

CITROËN BX Break (XB-_),BX (XB-_),PEUGEOT 305 I Break (581D),305 I (581A),305 II Break (581E),305 II (581M),309 I (10C, 10A),405 I Break (15E),405 I (15B),405 II Break (4E),405 II (4B)

19313 **Lenker, Radaufhängung, Track Control Arm, Bras de liaison, suspension de roue**

PEUGEOT 309 I (10C, 10A),309 II (3C, 3A)

19314 **Lenker, Radaufhängung, Track Control Arm, Bras de liaison, suspension de roue**

PEUGEOT 309 I (10C, 10A),309 II (3C, 3A)

19315 **Spurstangenkopf, Tie Rod End, Rotule de barre de connexion**

PEUGEOT 305 II Break (581E),305 II (581M),405 I Break (15E),405 I (15B),405 II Break (4E),405 II (4B)

19316 **Spurstangenkopf, Tie Rod End, Rotule de barre de connexion**

PEUGEOT 305 II Break (581E),305 II (581M),405 I Break (15E),405 I (15B),405 II Break (4E),405 II (4B)

19317 **Lenker, Radaufhängung, Track Control Arm, Bras de liaison, suspension de roue**

PEUGEOT 309 I (10C, 10A),309 II (3C, 3A)

19318 **Lenker, Radaufhängung, Track Control Arm, Bras de liaison, suspension de roue**

PEUGEOT 309 I (10C, 10A),309 II (3C, 3A)

19319 **Trag-/Führungsgelenk, Ball Joint, Rotule de suspension**

PEUGEOT 306 Break (7E, N3, N5),306 Cabriolet (7D, N3, N5),306 Schrägheck (7A, 7C, N3, N5),306 (7B, N3, N5)

19320	**Trag-/Führungsgelenk, Ball Joint, Rotule de suspension**
	PEUGEOT 306 Break (7E, N3, N5),306 Cabriolet (7D, N3, N5),306 Schrägheck (7A, 7C, N3, N5),306 (7B, N3, N5)
19321	**Lenker, Radaufhängung, Track Control Arm, Bras de liaison, suspension de roue**
	CITROËN AX (ZA-_),SAXO (S0, S1),PEUGEOT 106 I (1A, 1C),106 II (1)
19322	**Lenker, Radaufhängung, Track Control Arm, Bras de liaison, suspension de roue**
	CITROËN AX (ZA-_),SAXO (S0, S1),PEUGEOT 106 I (1A, 1C),106 II (1)
19323	**Axialgelenk, Spurstange, Inner Tie Rod, Rotule de direction intérieure, barre de connexion**
	PEUGEOT 305 I Break (581D),305 I (581A)
19324	**Axialgelenk, Spurstange, Inner Tie Rod, Rotule de direction intérieure, barre de connexion**
	PEUGEOT 305 II Break (581E),305 II (581M),405 I Break (15E),405 I (15B),405 II Break (4E),405 II (4B)
19324/1	**Spurstange, Rod Assembly, Barre de connexion**
	PEUGEOT 305 II Break (581E),305 II (581M)
19325	**Spurstange, Rod Assembly, Barre de connexion**
	PEUGEOT 305 II Break (581E),305 II (581M),405 I Break (15E),405 I (15B),405 II Break (4E),405 II (4B)
19325/1	**Spurstange, Rod Assembly, Barre de connexion**
	PEUGEOT 305 II Break (581E),305 II (581M)
19326	**Spurstange, Rod Assembly, Barre de connexion**
	PEUGEOT 305 II Break (581E),305 II (581M),405 I Break (15E),405 I (15B),405 II Break (4E),405 II (4B)
19327	**Lenker, Radaufhängung, Track Control Arm, Bras de liaison, suspension de roue**
	PEUGEOT 405 I Break (15E),405 I (15B),405 II Break (4E),405 II (4B)
19328	**Lenker, Radaufhängung, Track Control Arm, Bras de liaison, suspension de roue**
	PEUGEOT 405 I Break (15E),405 I (15B),405 II Break (4E),405 II (4B)
19329	**Lenker, Radaufhängung, Track Control Arm, Bras de liaison, suspension de roue**
	PEUGEOT 405 I Break (15E),405 I (15B),405 II Break (4E),405 II (4B)
19330	**Lenker, Radaufhängung, Track Control Arm, Bras de liaison, suspension de roue**
	PEUGEOT 405 I Break (15E),405 I (15B),405 II Break (4E),405 II (4B)
19331	**Lenker, Radaufhängung, Track Control Arm, Bras de liaison, suspension de roue**
	PEUGEOT 306 Break (7E, N3, N5),306 Cabriolet (7D, N3, N5),306 Schrägheck (7A, 7C, N3, N5),306 (7B, N3, N5)
19331/1	**Lenker, Radaufhängung, Track Control Arm, Bras de liaison, suspension de roue**
	CITROËN BERLINGO Kasten (M_),BERLINGO (MF),ZX Break (N2),ZX (N2),PEUGEOT PARTNER Combispace (5F),PARTNER Kasten (5),306 Break (7E, N3, N5),306 Cabriolet (7D, N3, N5),306 Schrägheck (7A, 7C, N3, N5),306 (7B, N3, N5)
19332	**Lenker, Radaufhängung, Track Control Arm, Bras de liaison, suspension de roue**
	PEUGEOT 306 Break (7E, N3, N5),306 Cabriolet (7D, N3, N5),306 Schrägheck (7A, 7C, N3, N5),306 (7B, N3, N5)
19332/1	**Lenker, Radaufhängung, Track Control Arm, Bras de liaison, suspension de roue**
	CITROËN BERLINGO Kasten (M_),BERLINGO (MF),ZX Break (N2),ZX (N2),PEUGEOT PARTNER Combispace (5F),PARTNER Kasten (5),306 Break (7E, N3, N5),306 Cabriolet (7D, N3, N5),306 Schrägheck (7A, 7C, N3, N5),306 (7B, N3, N5)
19333	**Lenker, Radaufhängung, Track Control Arm, Bras de liaison, suspension de roue**
	PEUGEOT 306 Break (7E, N3, N5),306 Cabriolet (7D, N3, N5),306 Schrägheck (7A, 7C, N3, N5),306 (7B, N3, N5)
19334	**Lenker, Radaufhängung, Track Control Arm, Bras de liaison, suspension de roue**
	PEUGEOT 306 Break (7E, N3, N5),306 Cabriolet (7D, N3, N5),306 Schrägheck (7A, 7C, N3, N5),306 (7B, N3, N5)
19335	**Spurstange, Rod Assembly, Barre de connexion**
	PEUGEOT 205 I Cabriolet (741B, 20D),205 I (741A/C),205 II (20A/C),205 Kasten
19336	**Spurstange, Rod Assembly, Barre de connexion**
	PEUGEOT 306 Break (7E, N3, N5),306 Cabriolet (7D, N3, N5),306 Schrägheck (7A, 7C, N3, N5),306 (7B, N3, N5)
19336/1	**Axialgelenk, Spurstange, Inner Tie Rod, Rotule de direction intérieure, barre de connexion**
	PEUGEOT 306 Break (7E, N3, N5),306 Cabriolet (7D, N3, N5),306 Schrägheck (7A, 7C, N3, N5),306 (7B, N3, N5)
19337HPS	**Stange/Strebe, Stabilisator, Link Stabiliser, Entretoise/tige, stabilisateur**
	CITROËN BERLINGO Kasten (M_),BERLINGO (MF),XSARA Break (N2),XSARA Coupe (N0),XSARA (N1),XSARA PICASSO (N68),ZX Break (N2),ZX (N2),PEUGEOT PARTNER Combispace (5F),PARTNER Kasten (5),306 Break (7E, N3, N5),306 Cabriolet (7D, N3, N5),306 Schrägheck (7A, 7C, N3, N5),306 (7B, N3, N5)
19338HPS	**Stange/Strebe, Stabilisator, Link Stabiliser, Entretoise/tige, stabilisateur**
	CITROËN SAXO (S0, S1),XANTIA Break (X1),XANTIA Break (X2),XANTIA (X1),XANTIA (X2),PEUGEOT 106 I (1A, 1C),106 II (1),406 Break (8E/F),406 Coupe (8C),406 (8B)
19339HPS	**Stange/Strebe, Stabilisator, Link Stabiliser, Entretoise/tige, stabilisateur**
	CITROËN VISA,PEUGEOT 205 I Cabriolet (741B, 20D),205 I (741A/C),205 II (20A/C),309 I (10C, 10A),309 II (3C, 3A)
19340	**Axialgelenk, Spurstange, Inner Tie Rod, Rotule de direction intérieure, barre de connexion**
	PEUGEOT 305 II Break (581E),305 II (581M)
19340/1	**Spurstange, Rod Assembly, Barre de connexion**
	PEUGEOT 309 I (10C, 10A),309 II (3C, 3A)
19341	**Spurstangenkopf, Tie Rod End, Rotule de barre de connexion**
	PEUGEOT 406 Break (8E/F),406 Coupe (8C),406 (8B)

19342	**Spurstangenkopf, Tie Rod End, Rotule de barre de connexion**
	PEUGEOT 406 Break (8E/F),406 Coupe (8C),406 (8B)
19344	**Lenker, Radaufhängung, Track Control Arm, Bras de liaison, suspension de roue**
	PEUGEOT 406 Break (8E/F),406 Coupe (8C),406 (8B)
19345	**Lenker, Radaufhängung, Track Control Arm, Bras de liaison, suspension de roue**
	PEUGEOT 406 Break (8E/F),406 Coupe (8C),406 (8B)
19346	**Lenker, Radaufhängung, Track Control Arm, Bras de liaison, suspension de roue**
	PEUGEOT 206 CC (2D),206 Schrägheck (2A/C, T3E),206 SW (2E/K)
19347	**Lenker, Radaufhängung, Track Control Arm, Bras de liaison, suspension de roue**
	PEUGEOT 206 CC (2D),206 Schrägheck (2A/C, T3E),206 SW (2E/K)
19348HPS	**Stange/Strebe, Stabilisator, Link Stabiliser, Entretoise/tige, stabilisateur**
	CITROËN C1 (PM_, PN_),C2 (JM_),C3 (FC_),C3 Pluriel (HB_),PEUGEOT 1007 (KM_),107,206 CC (2D),206 Schrägheck (2A/C, T3E),206 SW (2E/K),406 Break (8E/F),TOYOTA AYGO (B10)
19349	**Lenker, Radaufhängung, Track Control Arm, Bras de liaison, suspension de roue**
	CITROËN VISA,PEUGEOT 205 I Cabriolet (741B, 20D),205 I (741A/C),205 II (20A/C)
19350	**Lenker, Radaufhängung, Track Control Arm, Bras de liaison, suspension de roue**
	CITROËN VISA,PEUGEOT 205 I Cabriolet (741B, 20D),205 I (741A/C),205 II (20A/C)
19351	**Lenker, Radaufhängung, Track Control Arm, Bras de liaison, suspension de roue**
	PEUGEOT 304 Break (_04D_),304 Cabriolet (_04B_),304 Coupe (_04C_),304 (_04M_),305 I Break (581D),305 I (581A),305 II Break (581E),305 II (581M)
19352	**Lenker, Radaufhängung, Track Control Arm, Bras de liaison, suspension de roue**
	PEUGEOT 304 Break (_04D_),304 Cabriolet (_04B_),304 Coupe (_04C_),304 (_04M_),305 I Break (581D),305 I (581A),305 II Break (581E),305 II (581M)
19353	**Axialgelenk, Spurstange, Inner Tie Rod, Rotule de direction intérieure, barre de connexion**
	CITROËN XANTIA Break (X1),XANTIA Break (X2),XANTIA (X1),XANTIA (X2),PEUGEOT 406 Break (8E/F),406 Coupe (8C),406 (8B),605 (6B)
19354	**Spurstange, Rod Assembly, Barre de connexion**
	PEUGEOT 104,104 Coupe,504 (A_, M_),504 Break (D_, F_),504 Cabriolet,504 Coupe,504 Pick-up (E_),505 Break (551D),505 (551A),604 (561A_),TALBOT SAMBA Cabriolet (51E),SAMBA (51A),TAGORA
19354/1	**Axialgelenk, Spurstange, Inner Tie Rod, Rotule de direction intérieure, barre de connexion**
	PEUGEOT 104,104 Coupe,505 Break (551D),505 (551A),604 (561A_),TALBOT SAMBA Cabriolet (51E),SAMBA (51A),TAGORA
19355	**Spurstange, Rod Assembly, Barre de connexion**
	CITROËN C15 (VD-_),LNA,VISA,VISA Cabriolet,PEUGEOT 104,104 Coupe,504 (A_, M_),504 Break (D_, F_),504 Cabriolet,504 Coupe,504 Pick-up (E_),505 Break (551D),505 (551A),604 (561A_),TALBOT SAMBA Cabriolet (51E),SAMBA (51A),TAGORA
19355/1	**Axialgelenk, Spurstange, Inner Tie Rod, Rotule de direction intérieure, barre de connexion**
	CITROËN C15 (VD-_),LNA,VISA,VISA Cabriolet,PEUGEOT 104,104 Coupe,505 Break (551D),505 (551A),604 (561A_),TALBOT SAMBA Cabriolet (51E),SAMBA (51A)
19356	**Spurstangenkopf, Tie Rod End, Rotule de barre de connexion**
	PEUGEOT J7 Bus,J7 Kasten,J7 Pritsche/Fahrgestell,J9 Bus,J9 Kasten,J9 Pritsche/Fahrgestell
19357	**Spurstangenkopf, Tie Rod End, Rotule de barre de connexion**
	PEUGEOT J7 Bus,J7 Kasten,J7 Pritsche/Fahrgestell,J9 Bus,J9 Kasten,J9 Pritsche/Fahrgestell
19358	**Trag-/Führungsgelenk, Ball Joint, Rotule de suspension**
	PEUGEOT J7 Bus,J7 Kasten,J7 Pritsche/Fahrgestell,J9 Bus,J9 Kasten,J9 Pritsche/Fahrgestell
19359	**Trag-/Führungsgelenk, Ball Joint, Rotule de suspension**
	PEUGEOT J7 Bus,J7 Kasten,J7 Pritsche/Fahrgestell,J9 Bus,J9 Kasten,J9 Pritsche/Fahrgestell
19360	**Lenker, Radaufhängung, Track Control Arm, Bras de liaison, suspension de roue**
	CITROËN SAXO (S0, S1),PEUGEOT 106 I (1A, 1C),106 II (1)
19361	**Lenker, Radaufhängung, Track Control Arm, Bras de liaison, suspension de roue**
	CITROËN SAXO (S0, S1),PEUGEOT 106 I (1A, 1C),106 II (1)
19362HPS	**Stange/Strebe, Stabilisator, Link Stabiliser, Entretoise/tige, stabilisateur**
	CITROËN C5 Break (DE_),C5 Break (RE_),C5 (DC_),C5 (RC_),XANTIA Break (X2),XANTIA (X2),PEUGEOT 406 Break (8E/F),406 Coupe (8C),406 (8B),607 (9D, 9U)
19363	**Stange/Strebe, Stabilisator, Link Stabiliser, Entretoise/tige, stabilisateur**
	CITROËN EVASION (22, U6),FIAT SCUDO Combinato (220P),ULYSSE (220),LANCIA ZETA (220),PEUGEOT EXPERT Kasten (222),EXPERT Pritsche/Fahrgestell (223),EXPERT (224),806 (221)
19364	**Stange/Strebe, Stabilisator, Link Stabiliser, Entretoise/tige, stabilisateur**
	PEUGEOT 405 I Break (15E),405 I (15B),405 II Break (4E),405 II (4B)
19365	**Stange/Strebe, Stabilisator, Link Stabiliser, Entretoise/tige, stabilisateur**
	PEUGEOT 406 Break (8E/F),406 Coupe (8C),406 (8B)
19366	**Stange/Strebe, Stabilisator, Link Stabiliser, Entretoise/tige, stabilisateur**
	CITROËN JUMPER Bus (230P),JUMPER Kasten (230L),JUMPER Pritsche/Fahrgestell (230),FIAT DUCATO Bus (230),DUCATO Kasten (230L),DUCATO Kasten (280),DUCATO Kasten (290),DUCATO Panorama (280),DUCATO Panorama (290),DUCATO Pritsche/Fahrgestell (230),DUCATO Pritsche/Fahrgestell (280),DUCATO Pritsche/Fahrgestell (290),PEUGEOT BOXER Bus (230P),BOXER Kasten (230L),BOXER Pritsche/Fahrgestell (ZCT_)
19367	**Stange/Strebe, Stabilisator, Link Stabiliser, Entretoise/tige, stabilisateur**
	CITROËN BERLINGO Kasten (M_),BERLINGO (MF),PEUGEOT PARTNER Combispace (5F),PARTNER Kasten (5),306 Break (7E, N3, N5),306 Cabriolet (7D, N3, N5),306 Schrägheck (7A, 7C, N3, N5),306 (7B, N3, N5)

19368HPS	**Stange/Strebe, Stabilisator, Link Stabiliser, Entretoise/tige, stabilisateur**
	PEUGEOT 406 Break (8E/F),406 Coupe (8C),406 (8B)
19369HPS	**Stange/Strebe, Stabilisator, Link Stabiliser, Entretoise/tige, stabilisateur**
	PEUGEOT 605 (6B),607 (9D, 9U)
19370HPS	**Stange/Strebe, Stabilisator, Link Stabiliser, Entretoise/tige, stabilisateur**
	PEUGEOT 605 (6B),607 (9D, 9U)
19371	**Trag-/Führungsgelenk, Ball Joint, Rotule de suspension**
	PEUGEOT 306 Break (7E, N3, N5),306 Cabriolet (7D, N3, N5),306 Schrägheck (7A, 7C, N3, N5),306 (7B, N3, N5)
19372	**Trag-/Führungsgelenk, Ball Joint, Rotule de suspension**
	CITROËN BERLINGO,BERLINGO Kasten,C4 Coupe (LA_),C4 Grand Picasso (UA_),C4 (LC_),C4 Picasso (UD_),C4 Stufenheck,DF CITROEN C-TRIOMPHE,DF PEUGEOT 307 Schrägheck,307 Stufenheck,PEUGEOT PARTNER Kasten,PARTNER Kasten (5),PARTNER Tepee,3008,307 Break (3E),307 CC (3B),307 SW (3H),307 (3A/C),308 CC,308 SW,308 (4A_, 4C_),5008
19373	**Axialgelenk, Spurstange, Inner Tie Rod, Rotule de direction intérieure, barre de connexion**
	PEUGEOT 206 CC (2D),206 Schrägheck (2A/C, T3E)
19374	**Axialgelenk, Spurstange, Inner Tie Rod, Rotule de direction intérieure, barre de connexion**
	CITROËN XANTIA Break (X1),XANTIA Break (X2),XANTIA (X1),XANTIA (X2),PEUGEOT 406 Break (8E/F),406 Coupe (8C),406 (8B)
19375HPS	**Stange/Strebe, Stabilisator, Link Stabiliser, Entretoise/tige, stabilisateur**
	CITROËN C4 Coupe (LA_),C4 (LC_),PEUGEOT 307 Break (3E),307 CC (3B),307 SW (3H),307 (3A/C)
19376HPS	**Stange/Strebe, Stabilisator, Link Stabiliser, Entretoise/tige, stabilisateur**
	CITROËN C8 (EA_, EB_),FIAT ULYSSE (179AX),LANCIA PHEDRA (179),PEUGEOT 807 (E)
19379	**Axialgelenk, Spurstange, Inner Tie Rod, Rotule de direction intérieure, barre de connexion**
	CITROËN C4 Coupe (LA_),C4 (LC_),PEUGEOT 307 Break (3E),307 CC (3B),307 SW (3H),307 (3A/C)
19380	**Axialgelenk, Spurstange, Inner Tie Rod, Rotule de direction intérieure, barre de connexion**
	PEUGEOT 607 (9D, 9U)
19381	**Spurstangenkopf, Tie Rod End, Rotule de barre de connexion**
	PEUGEOT 605 (6B),607 (9D, 9U)
19382	**Spurstangenkopf, Tie Rod End, Rotule de barre de connexion**
	PEUGEOT 605 (6B),607 (9D, 9U)
19383	**Lenker, Radaufhängung, Track Control Arm, Bras de liaison, suspension de roue**
	CITROËN BERLINGO,BERLINGO Kasten,C4 Coupe (LA_),C4 Grand Picasso (UA_),C4 (LC_),C4 Picasso (UD_),PEUGEOT PARTNER Kasten,PARTNER Tepee,307 Break (3E),307 CC (3B),307 SW (3H),307 (3A/C)
19384	**Lenker, Radaufhängung, Track Control Arm, Bras de liaison, suspension de roue**
	CITROËN BERLINGO,BERLINGO Kasten,C4 Coupe (LA_),C4 Grand Picasso (UA_),C4 (LC_),C4 Picasso (UD_),PEUGEOT PARTNER Kasten,PARTNER Tepee,307 Break (3E),307 CC (3B),307 SW (3H),307 (3A/C)
19385	**Lenker, Radaufhängung, Track Control Arm, Bras de liaison, suspension de roue**
	CITROËN C2 (JM_),C3 (FC_),C3 Pluriel (HB_),PEUGEOT 1007 (KM_)
19386	**Lenker, Radaufhängung, Track Control Arm, Bras de liaison, suspension de roue**
	CITROËN C2 (JM_),C3 (FC_),C3 Pluriel (HB_),PEUGEOT 1007 (KM_)
19389	**Trag-/Führungsgelenk, Ball Joint, Rotule de suspension**
	CITROËN BERLINGO Kasten (M_),BERLINGO (MF),PEUGEOT PARTNER Combispace (5F),PARTNER Kasten (5)
19390	**Lenker, Radaufhängung, Track Control Arm, Bras de liaison, suspension de roue**
	CITROËN C5 Break (DE_),C5 (DC_)
19391	**Lenker, Radaufhängung, Track Control Arm, Bras de liaison, suspension de roue**
	CITROËN C5 Break (DE_),C5 (DC_)
19392	**Spurstangenkopf, Tie Rod End, Rotule de barre de connexion**
	CITROËN C5 Break (TD_),C5 (RD_),C6 (TD_),PEUGEOT 407 Coupe (6C_),407 SW (6E_),407 (6D_)
19393	**Spurstangenkopf, Tie Rod End, Rotule de barre de connexion**
	CITROËN C5 Break (TD_),C5 (RD_),C6 (TD_),PEUGEOT 407 Coupe (6C_),407 SW (6E_),407 (6D_)
19394	**Trag-/Führungsgelenk, Ball Joint, Rotule de suspension**
	CITROËN C5 Break (TD_),C5 (RD_),C6 (TD_),PEUGEOT 407 Coupe (6C_),407 SW (6E_),407 (6D_)
19395	**Axialgelenk, Spurstange, Inner Tie Rod, Rotule de direction intérieure, barre de connexion**
	CITROËN C5 Break (TD_),C5 (RD_),C6 (TD_),PEUGEOT 407 Coupe (6C_),407 SW (6E_),407 (6D_)
19396	**Stange/Strebe, Stabilisator, Link Stabiliser, Entretoise/tige, stabilisateur**
	CITROËN C5 Break (TD_),C5 (RD_),C6 (TD_),PEUGEOT 407 Coupe (6C_),407 SW (6E_),407 (6D_)
19397	**Stange/Strebe, Stabilisator, Link Stabiliser, Entretoise/tige, stabilisateur**
	CITROËN C5 Break (TD_),C5 (RD_),C6 (TD_),PEUGEOT 407 Coupe (6C_),407 SW (6E_),407 (6D_)
19398	**Lenker, Radaufhängung, Track Control Arm, Bras de liaison, suspension de roue**
	PEUGEOT 206 CC (2D),206 Schrägheck (2A/C, T3E),206 SW (2E/K)
19399	**Lenker, Radaufhängung, Track Control Arm, Bras de liaison, suspension de roue**
	PEUGEOT 206 CC (2D),206 Schrägheck (2A/C, T3E),206 SW (2E/K)

19404 **Axialgelenk, Spurstange, Inner Tie Rod, Rotule de direction intérieure, barre de connexion**

IVECO Daily I,Daily II,Daily III

19405 **Axialgelenk, Spurstange, Inner Tie Rod, Rotule de direction intérieure, barre de connexion**

CITROËN C25 Bus (280_, 290_),C25 Kasten (280_, 290_),C25 Pritsche/Fahrgestell (280_, 290_),FIAT DUCATO Bus (230),DUCATO Kasten (230L),DUCATO Kasten (280),DUCATO Kasten (290),DUCATO Panorama (280),DUCATO Panorama (290),DUCATO Pritsche/Fahrgestell (280),DUCATO Pritsche/Fahrgestell (290),TALENTO Bus (290),TALENTO Kasten (290),TALENTO Pritsche/Fahrgestell (290),PEUGEOT J5 Bus (280P),J5 Bus (290P),J5 Kasten (280L),J5 Kasten (290L),J5 Pritsche/Fahrgestell (280L),J5 Pritsche/Fahrgestell (290L)

19406 **Spurstangenkopf, Tie Rod End, Rotule de barre de connexion**

IVECO Daily I,Daily II

19407 **Spurstangenkopf, Tie Rod End, Rotule de barre de connexion**

IVECO Daily I

19408 **Trag-/Führungsgelenk, Ball Joint, Rotule de suspension**

IVECO Daily I

19409 **Axialgelenk, Spurstange, Inner Tie Rod, Rotule de direction intérieure, barre de connexion**

CITROËN XM Break (Y3),XM Break (Y4),XM (Y3),XM (Y4),PEUGEOT 605 (6B)

19410 **Axialgelenk, Spurstange, Inner Tie Rod, Rotule de direction intérieure, barre de connexion**

CITROËN XANTIA Break (X1),XANTIA Break (X2),XANTIA (X1),XANTIA (X2),PEUGEOT 205 I Cabriolet (741B, 20D),205 I (741A/C),205 II (20A/C),205 Kasten,304 Break (_04D_),304 Cabriolet (_04B_),304 Coupe (_04C_),304 (_04M_),305 I (581A),305 II Break (581E),305 II (581M),309 I (10C, 10A),309 II (3C, 3A)

19411 **Axialgelenk, Spurstange, Inner Tie Rod, Rotule de direction intérieure, barre de connexion**

CITROËN BERLINGO Kasten (M_),BERLINGO (MF),XSARA Break (N2),XSARA Coupe (N0),XSARA (N1),ZX Break (N2),ZX (N2),PEUGEOT PARTNER Combispace (5F),PARTNER Kasten (5)

19412 **Axialgelenk, Spurstange, Inner Tie Rod, Rotule de direction intérieure, barre de connexion**

CITROËN BX Break (XB-_),BX (XB-_)

19413 **Spurstangenkopf, Tie Rod End, Rotule de barre de connexion**

CITROËN BX Break (XB-_),BX (XB-_)

19414 **Spurstangenkopf, Tie Rod End, Rotule de barre de connexion**

CITROËN BX Break (XB-_),BX (XB-_)

19415 **Trag-/Führungsgelenk, Ball Joint, Rotule de suspension**

CITROËN BX Break (XB-_),BX (XB-_),PEUGEOT 405 I Break (15E),405 I (15B),405 II Break (4E),405 II (4B)

19416 **Reparatursatz, Achsschenkelbolzen, Repair Kit, stub axle pin, Kit d'assemblage, pivot de fusée d'essieu**

CITROËN ACADIANE,DYANE,2 CV

19417 **Spurstangenkopf, Tie Rod End, Rotule de barre de connexion**

CITROËN AX (ZA-_),C4 Coupe (LA_),C4 (LC_),SAXO (S0, S1),XANTIA Break (X1),XANTIA Break (X2),XANTIA (X1),XANTIA (X2),XM Break (Y3),XM (Y3),PEUGEOT 106 I (1A, 1C),106 II (1),206 CC (2D),206 Schrägheck (2A/C, T3E),206 SW (2E/K),307 Break (3E),307 CC (3B),307 SW (3H),307 (3A/C),605 (6B)

19418 **Spurstangenkopf, Tie Rod End, Rotule de barre de connexion**

CITROËN AX (ZA-_),C4 Coupe (LA_),C4 (LC_),SAXO (S0, S1),XANTIA Break (X1),XANTIA Break (X2),XANTIA (X1),XANTIA (X2),XM Break (Y3),XM (Y3),PEUGEOT 106 I (1A, 1C),106 II (1),206 CC (2D),206 Schrägheck (2A/C, T3E),206 SW (2E/K),307 Break (3E),307 CC (3B),307 SW (3H),307 (3A/C),605 (6B)

19419 **Trag-/Führungsgelenk, Ball Joint, Rotule de suspension**

CITROËN AX (ZA-_)

19420 **Spurstangenkopf, Tie Rod End, Rotule de barre de connexion**

CITROËN C25 Bus (280_, 290_),C25 Kasten (280_, 290_),C25 Pritsche/Fahrgestell (280_, 290_),JUMPER Bus (230P),JUMPER Kasten (230L),FIAT DUCATO Bus (230),DUCATO Kasten (230L),DUCATO Kasten (280),DUCATO Kasten (290),DUCATO Panorama (280),DUCATO Panorama (290),DUCATO Pritsche/Fahrgestell (230),DUCATO Pritsche/Fahrgestell (280),DUCATO Pritsche/Fahrgestell (290),TALENTO Bus (290),TALENTO Kasten (290),TALENTO Pritsche/Fahrgestell (290),PEUGEOT BOXER Bus (230P),BOXER Kasten (230L),J5 Bus (280P),J5 Bus (290P),J5 Kasten (280L),J5 Kasten (290L),J5 Pritsche/Fahrgestell (280L),J5 Pritsche/Fahrgestell (290L)

19421 **Trag-/Führungsgelenk, Ball Joint, Rotule de suspension**

CITROËN C25 Bus (280_, 290_),C25 Kasten (280_, 290_),C25 Pritsche/Fahrgestell (280_, 290_),FIAT DUCATO Kasten (280),DUCATO Kasten (290),DUCATO Panorama (280),DUCATO Panorama (290),DUCATO Pritsche/Fahrgestell (280),242-SERIE Bus,242-SERIE Kasten,PEUGEOT J5 Bus (280P),J5 Bus (290P),J5 Kasten (280L),J5 Pritsche/Fahrgestell (280L),J5 Pritsche/Fahrgestell (290L)

19422 **Trag-/Führungsgelenk, Ball Joint, Rotule de suspension**

CITROËN C25 Bus (280_, 290_),C25 Kasten (280_, 290_),C25 Pritsche/Fahrgestell (280_, 290_),FIAT DUCATO Kasten (280),DUCATO Kasten (290),DUCATO Panorama (280),DUCATO Panorama (290),DUCATO Pritsche/Fahrgestell (280),DUCATO Pritsche/Fahrgestell (290),TALENTO Bus (290),TALENTO Kasten (290),TALENTO Pritsche/Fahrgestell (290),PEUGEOT J5 Bus (280P),J5 Bus (290P),J5 Kasten (280L),J5 Kasten (290L),J5 Pritsche/Fahrgestell (280L),J5 Pritsche/Fahrgestell (290L)

19423 **Spurstangenkopf, Tie Rod End, Rotule de barre de connexion**

IVECO Daily II

19424 **Axialgelenk, Spurstange, Inner Tie Rod, Rotule de direction intérieure, barre de connexion**

IVECO Daily II

19425 **Trag-/Führungsgelenk, Ball Joint, Rotule de suspension**

CITROËN XANTIA Break (X1),XANTIA Break (X2),XANTIA (X1),XANTIA (X2),XM Break (Y3),XM Break (Y4),XM (Y3),XM (Y4),PEUGEOT 405 I (15B),405 II Break (4E),405 II (4B),406 Break (8E/F),406 Coupe (8C),406 (8B),605 (6B),607 (9D, 9U)

19426 **Trag-/Führungsgelenk, Ball Joint, Rotule de suspension**

CITROËN BERLINGO Kasten (M_),BERLINGO (MF),XSARA Break (N2),XSARA Coupe (N0),XSARA (N1),ZX Break (N2),ZX (N2),PEUGEOT PARTNER Combispace (5F),PARTNER Kasten (5)

19427 **Trag-/Führungsgelenk, Ball Joint, Rotule de suspension**

CITROËN BERLINGO Kasten (M_),BERLINGO (MF),XSARA Break (N2),XSARA Coupe (N0),XSARA (N1),ZX Break (N2),ZX (N2),PEUGEOT PARTNER Combispace (5F),PARTNER Kasten (5)

19428 **Trag-/Führungsgelenk, Ball Joint, Rotule de suspension**

CITROËN AX (ZA-_),SAXO (S0, S1),PEUGEOT 106 I (1A, 1C),106 II (1)

19429HPS **Stange/Strebe, Stabilisator, Link Stabiliser, Entretoise/tige, stabilisateur**

CITROËN XANTIA Break (X1),XANTIA Break (X2),XANTIA (X1),XANTIA (X2)

19430 **Spurstangenkopf, Tie Rod End, Rotule de barre de connexion**

CITROËN EVASION (22, U6),JUMPER Bus (230P),JUMPER Kasten (230L),JUMPER Pritsche/Fahrgestell (230),JUMPY Kasten (BS_, BT_, BY_, BZ_),JUMPY Pritsche/Fahrgestell (BU_, BV_, BW_, BX_),JUMPY (U6U),FIAT SCUDO Combinato (220P),SCUDO Kasten (220L),ULYSSE (220),LANCIA ZETA (220),PEUGEOT EXPERT Kasten (222),EXPERT Pritsche/Fahrgestell (223),EXPERT (224),806 (221)

19431 **Lenker, Radaufhängung, Track Control Arm, Bras de liaison, suspension de roue**

CITROËN EVASION (22, U6),JUMPY Kasten (BS_, BT_, BY_, BZ_),JUMPY Pritsche/Fahrgestell (BU_, BV_, BW_, BX_),JUMPY (U6U),FIAT SCUDO Combinato (220P),SCUDO Kasten (220L),ULYSSE (220),LANCIA ZETA (220),PEUGEOT EXPERT Kasten (222),EXPERT Pritsche/Fahrgestell (223),EXPERT (224),806 (221)

19432 **Lenker, Radaufhängung, Track Control Arm, Bras de liaison, suspension de roue**

CITROËN EVASION (22, U6),JUMPY Kasten (BS_, BT_, BY_, BZ_),JUMPY Pritsche/Fahrgestell (BU_, BV_, BW_, BX_),JUMPY (U6U),FIAT SCUDO Combinato (220P),SCUDO Kasten (220L),ULYSSE (220),LANCIA ZETA (220),PEUGEOT EXPERT Kasten (222),EXPERT Pritsche/Fahrgestell (223),EXPERT (224),806 (221)

19433 **Lenker, Radaufhängung, Track Control Arm, Bras de liaison, suspension de roue**

CITROËN EVASION (22, U6),JUMPY Pritsche/Fahrgestell (BU_, BV_, BW_, BX_),JUMPY (U6U),FIAT SCUDO Combinato (220P),ULYSSE (220),PEUGEOT 806 (221)

19434 **Lenker, Radaufhängung, Track Control Arm, Bras de liaison, suspension de roue**

CITROËN EVASION (22, U6),JUMPY Pritsche/Fahrgestell (BU_, BV_, BW_, BX_),JUMPY (U6U),FIAT SCUDO Combinato (220P),ULYSSE (220),PEUGEOT 806 (221)

19435HPS **Stange/Strebe, Stabilisator, Link Stabiliser, Entretoise/tige, stabilisateur**

CITROËN ZX (N2)

19437 **Lenker, Radaufhängung, Track Control Arm, Bras de liaison, suspension de roue**

CITROËN BERLINGO Kasten (M_),BERLINGO (MF),ZX Break (N2),ZX (N2),PEUGEOT PARTNER Combispace (5F),PARTNER Kasten (5)

19438 **Lenker, Radaufhängung, Track Control Arm, Bras de liaison, suspension de roue**

CITROËN BERLINGO Kasten (M_),BERLINGO (MF),ZX Break (N2),ZX (N2),PEUGEOT PARTNER Combispace (5F),PARTNER Kasten (5)

19439 **Lenker, Radaufhängung, Track Control Arm, Bras de liaison, suspension de roue**

CITROËN BERLINGO Kasten (M_),BERLINGO (MF),XSARA Break (N2),XSARA Coupe (N0),XSARA (N1),ZX Break (N2),ZX (N2),PEUGEOT PARTNER Combispace (5F),PARTNER Kasten (5)

19440 **Lenker, Radaufhängung, Track Control Arm, Bras de liaison, suspension de roue**

CITROËN BERLINGO Kasten (M_),BERLINGO (MF),XSARA Break (N2),XSARA Coupe (N0),XSARA (N1),ZX Break (N2),ZX (N2),PEUGEOT PARTNER Combispace (5F),PARTNER Kasten (5)

19441 **Lenker, Radaufhängung, Track Control Arm, Bras de liaison, suspension de roue**

CITROËN C25 Bus (280_, 290_),FIAT DUCATO Kasten (280),DUCATO Panorama (280),DUCATO Panorama (290),DUCATO Pritsche/Fahrgestell (280),DUCATO Pritsche/Fahrgestell (290),TALENTO Bus (290),TALENTO Kasten (290),TALENTO Pritsche/Fahrgestell (290),PEUGEOT J5 Bus (280P),J5 Bus (290P),J5 Kasten (280L),J5 Kasten (290L),J5 Pritsche/Fahrgestell (280L),J5 Pritsche/Fahrgestell (290L)

19442 **Lenker, Radaufhängung, Track Control Arm, Bras de liaison, suspension de roue**

CITROËN C25 Bus (280_, 290_),FIAT DUCATO Kasten (280),DUCATO Panorama (280),DUCATO Panorama (290),DUCATO Pritsche/Fahrgestell (280),DUCATO Pritsche/Fahrgestell (290),TALENTO Bus (290),TALENTO Kasten (290),TALENTO Pritsche/Fahrgestell (290),PEUGEOT J5 Bus (280P),J5 Bus (290P),J5 Kasten (280L),J5 Kasten (290L),J5 Pritsche/Fahrgestell (280L),J5 Pritsche/Fahrgestell (290L)

19443 **Spurstange, Rod Assembly, Barre de connexion**

CITROËN XSARA Break (N2),XSARA Coupe (N0),XSARA (N1),XSARA PICASSO (N68),ZX Break (N2),ZX (N2)

19444 **Spurstange, Rod Assembly, Barre de connexion**

CITROËN XANTIA Break (X1),XANTIA Break (X2),XANTIA (X1),XANTIA (X2)

19445 **Spurstange, Rod Assembly, Barre de connexion**

CITROËN XANTIA Break (X1),XANTIA Break (X2),XANTIA (X1),XANTIA (X2)

19446 **Spurstange, Rod Assembly, Barre de connexion**

CITROËN C15 (VD-_),VISA

19446/1 **Axialgelenk, Spurstange, Inner Tie Rod, Rotule de direction intérieure, barre de connexion**

CITROËN C15 (VD-_),VISA,PEUGEOT 305 II Break (581E),305 II (581M)

19447 **Spurstangenkopf, Tie Rod End, Rotule de barre de connexion**

CITROËN JUMPER Bus (230P),JUMPER Bus (244, Z_),JUMPER Kasten (230L),JUMPER Kasten (244),JUMPER Pritsche/Fahrgestell (230),JUMPER Pritsche/Fahrgestell (244),FIAT DUCATO Bus (230),DUCATO Bus (244, Z_),DUCATO Kasten (230L),DUCATO Kasten (244),DUCATO Pritsche/Fahrgestell (230),DUCATO Pritsche/Fahrgestell (244),PEUGEOT BOXER Bus (230P),BOXER Bus (244, Z_),BOXER Kasten (230L),BOXER Kasten (244),BOXER Pritsche/Fahrgestell (ZCT_),BOXER Pritsche/Fahrgestell (244)

19448 **Axialgelenk, Spurstange, Inner Tie Rod, Rotule de direction intérieure, barre de connexion**

CITROËN C25 Bus (280_, 290_),C25 Kasten (280_, 290_),C25 Pritsche/Fahrgestell (280_, 290_),EVASION (22, U6),JUMPER Bus (230P),JUMPER Kasten (230L),JUMPER Pritsche/Fahrgestell (230),FIAT DUCATO Bus (230),DUCATO Kasten (230L),DUCATO Kasten (290),DUCATO Panorama (290),DUCATO Pritsche/Fahrgestell (230),DUCATO Pritsche/Fahrgestell (290),PEUGEOT BOXER Bus (230P),BOXER Kasten (230L),BOXER Pritsche/Fahrgestell (ZCT_),PARTNER Combispace (5F),PARTNER Kasten (5)

19449 **Trag-/Führungsgelenk, Ball Joint, Rotule de suspension**

CITROËN JUMPER Bus (230P),JUMPER Kasten (230L),JUMPER Pritsche/Fahrgestell (230),FIAT DUCATO Bus (230),DUCATO Kasten (230L),DUCATO Pritsche/Fahrgestell (230),PEUGEOT BOXER Bus (230P),BOXER Kasten (230L),BOXER Pritsche/Fahrgestell (ZCT_)

19450 **Trag-/Führungsgelenk, Ball Joint, Rotule de suspension**

CITROËN JUMPER Bus (230P),JUMPER Kasten (230L),JUMPER Pritsche/Fahrgestell (230),FIAT DUCATO Bus (230),DUCATO Kasten (230L),DUCATO Pritsche/Fahrgestell (230),PEUGEOT BOXER Bus (230P),BOXER Kasten (230L),BOXER Pritsche/Fahrgestell (ZCT_)

19451HPS **Stange/Strebe, Stabilisator, Link Stabiliser, Entretoise/tige, stabilisateur**

CITROËN XM Break (Y3),XM Break (Y4),XM (Y3),XM (Y4),PEUGEOT 605 (6B)

19452 — **Axialgelenk, Spurstange, Inner Tie Rod, Rotule de direction intérieure, barre de connexion**

FIAT PANDA Van (141_),PANDA (141A_),PANDA (169),LANCIA Y10 (156),SEAT MARBELLA Kasten (028A),MARBELLA (28)

19453 — **Lenker, Radaufhängung, Track Control Arm, Bras de liaison, suspension de roue**

CITROËN XANTIA Break (X1),XANTIA Break (X2),XANTIA (X1),XANTIA (X2)

19454 — **Lenker, Radaufhängung, Track Control Arm, Bras de liaison, suspension de roue**

CITROËN XANTIA Break (X1),XANTIA Break (X2),XANTIA (X1),XANTIA (X2)

19459 — **Lenker, Radaufhängung, Track Control Arm, Bras de liaison, suspension de roue**

CITROËN XSARA Break (N2),XSARA Coupe (N0),XSARA (N1)

19460 — **Lenker, Radaufhängung, Track Control Arm, Bras de liaison, suspension de roue**

CITROËN XSARA Break (N2),XSARA Coupe (N0),XSARA (N1)

19461 — **Lenker, Radaufhängung, Track Control Arm, Bras de liaison, suspension de roue**

CITROËN JUMPER Bus (230P),JUMPER Kasten (230L),JUMPER Pritsche/Fahrgestell (230),FIAT DUCATO Bus (230),DUCATO Kasten (230L),DUCATO Pritsche/Fahrgestell (230),PEUGEOT BOXER Bus (230P),BOXER Kasten (230L),BOXER Pritsche/Fahrgestell (ZCT_)

19462 — **Lenker, Radaufhängung, Track Control Arm, Bras de liaison, suspension de roue**

CITROËN JUMPER Bus (230P),JUMPER Kasten (230L),JUMPER Pritsche/Fahrgestell (230),FIAT DUCATO Bus (230),DUCATO Kasten (230L),DUCATO Pritsche/Fahrgestell (230),PEUGEOT BOXER Bus (230P),BOXER Kasten (230L),BOXER Pritsche/Fahrgestell (ZCT_)

19463 — **Lenker, Radaufhängung, Track Control Arm, Bras de liaison, suspension de roue**

CITROËN JUMPER Bus (230P),JUMPER Kasten (230L),JUMPER Pritsche/Fahrgestell (230),FIAT DUCATO Bus (230),DUCATO Kasten (230L),DUCATO Kasten (244),DUCATO Pritsche/Fahrgestell (230),PEUGEOT BOXER Bus (230P),BOXER Kasten (230L),BOXER Pritsche/Fahrgestell (ZCT_)

19464 — **Lenker, Radaufhängung, Track Control Arm, Bras de liaison, suspension de roue**

CITROËN JUMPER Bus (230P),JUMPER Kasten (230L),JUMPER Pritsche/Fahrgestell (230),FIAT DUCATO Bus (230),DUCATO Kasten (230L),DUCATO Kasten (244),DUCATO Pritsche/Fahrgestell (230),PEUGEOT BOXER Bus (230P),BOXER Kasten (230L),BOXER Pritsche/Fahrgestell (ZCT_)

19468 — **Lenker, Radaufhängung, Track Control Arm, Bras de liaison, suspension de roue**

CITROËN C25 Bus (280_, 290_),FIAT DUCATO Kasten (280),DUCATO Kasten (290),DUCATO Panorama (280),DUCATO Panorama (290),DUCATO Pritsche/Fahrgestell (280),DUCATO Pritsche/Fahrgestell (290),TALENTO Bus (290),TALENTO Kasten (290),TALENTO Pritsche/Fahrgestell (290),PEUGEOT J5 Bus (280P),J5 Bus (290P),J5 Kasten (280L),J5 Kasten (290L),J5 Pritsche/Fahrgestell (280L),J5 Pritsche/Fahrgestell (290L)

19469 — **Lenker, Radaufhängung, Track Control Arm, Bras de liaison, suspension de roue**

CITROËN C25 Bus (280_, 290_),FIAT DUCATO Kasten (280),DUCATO Kasten (290),DUCATO Panorama (280),DUCATO Panorama (290),DUCATO Pritsche/Fahrgestell (280),DUCATO Pritsche/Fahrgestell (290),TALENTO Bus (290),TALENTO Kasten (290),TALENTO Pritsche/Fahrgestell (290),PEUGEOT J5 Bus (280P),J5 Bus (290P),J5 Kasten (280L),J5 Kasten (290L),J5 Pritsche/Fahrgestell (280L),J5 Pritsche/Fahrgestell (290L)

19470 — **Stange/Strebe, Stabilisator, Link Stabiliser, Entretoise/tige, stabilisateur**

CITROËN BX Break (XB-_),BX (XB-_)

19471 — **Lenker, Radaufhängung, Track Control Arm, Bras de liaison, suspension de roue**

CITROËN AX (ZA-_)

19472 — **Lenker, Radaufhängung, Track Control Arm, Bras de liaison, suspension de roue**

CITROËN AX (ZA-_)

19473 — **Trag-/Führungsgelenk, Ball Joint, Rotule de suspension**

CITROËN BERLINGO Kasten (M_),BERLINGO (MF),XSARA Break (N2),XSARA Coupe (N0),XSARA (N1),XSARA PICASSO (N68),PEUGEOT PARTNER Combispace (5F),PARTNER Kasten (5)

19474 — **Lenker, Radaufhängung, Track Control Arm, Bras de liaison, suspension de roue**

CITROËN BERLINGO Kasten (M_),BERLINGO (MF),XSARA Break (N2),XSARA Coupe (N0),XSARA (N1),ZX Break (N2),ZX (N2),PEUGEOT PARTNER Combispace (5F),PARTNER Kasten (5),306 Break (7E, N3, N5),306 Cabriolet (7D, N3, N5),306 Schrägheck (7A, 7C, N3, N5),306 (7B, N3, N5)

19475 — **Lenker, Radaufhängung, Track Control Arm, Bras de liaison, suspension de roue**

CITROËN BERLINGO Kasten (M_),BERLINGO (MF),XSARA Break (N2),XSARA Coupe (N0),XSARA (N1),ZX Break (N2),ZX (N2),PEUGEOT PARTNER Combispace (5F),PARTNER Kasten (5),306 Break (7E, N3, N5),306 Cabriolet (7D, N3, N5),306 Schrägheck (7A, 7C, N3, N5),306 (7B, N3, N5)

19475/1 — **Lenker, Radaufhängung, Track Control Arm, Bras de liaison, suspension de roue**

CITROËN BERLINGO Kasten (M_),BERLINGO (MF),ZX Break (N2),ZX (N2),PEUGEOT PARTNER Combispace (5F),PARTNER Kasten (5),306 Break (7E, N3, N5),306 Cabriolet (7D, N3, N5),306 Schrägheck (7A, 7C, N3, N5),306 (7B, N3, N5)

19476HPS — **Stange/Strebe, Stabilisator, Link Stabiliser, Entretoise/tige, stabilisateur**

CITROËN AX (ZA-_),PEUGEOT 106 I (1A, 1C),106 II (1)

19477 — **Spurstangenkopf, Tie Rod End, Rotule de barre de connexion**

CITROËN C5 Break (DE_),C5 Break (RE_),C5 (DC_),C5 (RC_)

19478 — **Spurstangenkopf, Tie Rod End, Rotule de barre de connexion**

CITROËN C5 Break (DE_),C5 Break (RE_),C5 (DC_),C5 (RC_)

19479 — **Axialgelenk, Spurstange, Inner Tie Rod, Rotule de direction intérieure, barre de connexion**

CITROËN C3 (FC_),PEUGEOT 1007 (KM_)

19480 — **Spurstangenrohr, Tie Rod Tube, Tuyau de la barre de connexion**

CITROËN AX (ZA-_),SAXO (S0, S1),PEUGEOT 106 I (1A, 1C),106 II (1)

19481 — **Hebelauge, Spurstange, Eyebolt, steering rod, Oeil de levier, barre de connexion**

CITROËN AX (ZA-_),SAXO (S0, S1),PEUGEOT 106 I (1A, 1C),106 II (1)

19482 — **Hebelauge, Spurstange, Eyebolt, steering rod, Oeil de levier, barre de connexion**

CITROËN SAXO (S0, S1),PEUGEOT 106 I (1A, 1C),106 II (1)

19483 **Schraube, Spureinstellung, Bolt, wheel alignment, Boulon, alignement des roues**

CITROËN SAXO (S0, S1),PEUGEOT 106 I (1A, 1C)

19484 **Axialgelenk, Spurstange, Inner Tie Rod, Rotule de direction intérieure, barre de connexion**

CITROËN BERLINGO Kasten (M_),BERLINGO (MF),XSARA PICASSO (N68),PEUGEOT PARTNER Combispace (5F),PARTNER Kasten (5)

19485 **Lenker, Radaufhängung, Track Control Arm, Bras de liaison, suspension de roue**

CITROËN BERLINGO Kasten (M_),BERLINGO (MF),XSARA PICASSO (N68),PEUGEOT PARTNER Combispace (5F),PARTNER Kasten (5)

19486 **Lenker, Radaufhängung, Track Control Arm, Bras de liaison, suspension de roue**

CITROËN BERLINGO Kasten (M_),BERLINGO (MF),XSARA PICASSO (N68),PEUGEOT PARTNER Combispace (5F),PARTNER Kasten (5)

19487 **Lenker, Radaufhängung, Track Control Arm, Bras de liaison, suspension de roue**

PEUGEOT 605 (6B),607 (9D, 9U)

19488 **Lenker, Radaufhängung, Track Control Arm, Bras de liaison, suspension de roue**

PEUGEOT 605 (6B),607 (9D, 9U)

19489 **Spurstangenkopf, Tie Rod End, Rotule de barre de connexion**

CITROËN C3 (FC_),C3 Pluriel (HB_),PEUGEOT 1007 (KM_)

19490 **Spurstangenkopf, Tie Rod End, Rotule de barre de connexion**

CITROËN C3 (FC_),C3 Pluriel (HB_),PEUGEOT 1007 (KM_)

19491 **Trag-/Führungsgelenk, Ball Joint, Rotule de suspension**

CITROËN C2 (JM_),C3 (FC_),C3 Picasso,C3 Pluriel (HB_),PEUGEOT 1007 (KM_),207 CC (WD_),207 SW (WK_),207 (WA_, WC_)

19492 **Spurstangenkopf, Tie Rod End, Rotule de barre de connexion**

CITROËN C8 (EA_, EB_),JUMPY Kasten (BS_, BT_, BY_, BZ_),JUMPY Pritsche/Fahrgestell (BU_, BV_, BW_, BX_),JUMPY (U6U),FIAT SCUDO Combinato (220P),SCUDO Kasten (220L),ULYSSE (179AX),LANCIA PHEDRA (179),PEUGEOT EXPERT Kasten (222),EXPERT Pritsche/Fahrgestell (223),EXPERT (224),807 (E)

19493 **Axialgelenk, Spurstange, Inner Tie Rod, Rotule de direction intérieure, barre de connexion**

CITROËN C8 (EA_, EB_),FIAT ULYSSE (179AX),LANCIA PHEDRA (179),PEUGEOT 807 (E)

19494 **Lenker, Radaufhängung, Track Control Arm, Bras de liaison, suspension de roue**

CITROËN JUMPER Bus,JUMPER Kasten,JUMPER Pritsche/Fahrgestell,FIAT DUCATO Bus,DUCATO Kasten,DUCATO Pritsche/Fahrgestell,PEUGEOT BOXER Bus,BOXER Kasten,BOXER Pritsche/Fahrgestell

19495 **Lenker, Radaufhängung, Track Control Arm, Bras de liaison, suspension de roue**

CITROËN JUMPER Bus,JUMPER Kasten,JUMPER Pritsche/Fahrgestell,FIAT DUCATO Bus,DUCATO Kasten,DUCATO Pritsche/Fahrgestell,PEUGEOT BOXER Bus,BOXER Kasten,BOXER Pritsche/Fahrgestell

19496 **Spurstangenkopf, Tie Rod End, Rotule de barre de connexion**

CITROËN JUMPER Bus,JUMPER Kasten,JUMPER Pritsche/Fahrgestell,FIAT DUCATO Bus,DUCATO Kasten,DUCATO Pritsche/Fahrgestell,PEUGEOT BOXER Bus,BOXER Kasten,BOXER Pritsche/Fahrgestell

19497 **Spurstangenkopf, Tie Rod End, Rotule de barre de connexion**

CITROËN JUMPER Bus,JUMPER Kasten,JUMPER Pritsche/Fahrgestell,FIAT DUCATO Bus,DUCATO Kasten,DUCATO Pritsche/Fahrgestell,PEUGEOT BOXER Bus,BOXER Kasten,BOXER Pritsche/Fahrgestell

19498 **Trag-/Führungsgelenk, Ball Joint, Rotule de suspension**

CITROËN JUMPER Bus (230P),JUMPER Bus (244, Z_),JUMPER Kasten (230L),JUMPER Kasten (244),JUMPER Pritsche/Fahrgestell (230),JUMPER Pritsche/Fahrgestell (244),FIAT DUCATO Bus (230),DUCATO Bus (244, Z_),DUCATO Kasten (230L),DUCATO Kasten (244),DUCATO Pritsche/Fahrgestell (230),DUCATO Pritsche/Fahrgestell (244),PEUGEOT BOXER Bus (230P),BOXER Bus (244, Z_),BOXER Kasten (230L),BOXER Kasten (244),BOXER Pritsche/Fahrgestell (ZCT_),BOXER Pritsche/Fahrgestell (244)

19499 **Trag-/Führungsgelenk, Ball Joint, Rotule de suspension**

CITROËN JUMPER Bus (230P),JUMPER Bus (244, Z_),JUMPER Kasten (230L),JUMPER Kasten (244),JUMPER Pritsche/Fahrgestell (230),JUMPER Pritsche/Fahrgestell (244),FIAT DUCATO Bus (244, Z_),DUCATO Kasten (244),DUCATO Pritsche/Fahrgestell (244),PEUGEOT BOXER Bus (230P),BOXER Bus (244, Z_),BOXER Kasten (230L),BOXER Kasten (244),BOXER Pritsche/Fahrgestell (ZCT_),BOXER Pritsche/Fahrgestell (244)

19500 **Spurstangenkopf, Tie Rod End, Rotule de barre de connexion**

HONDA CIVIC I Shuttle (AN, AR),CIVIC II Shuttle (EE),CIVIC III Hatchback (EC, ED, EE),CIVIC III Stufenheck (ED),CRX II (ED, EE)

19501 **Spurstangenkopf, Tie Rod End, Rotule de barre de connexion**

HONDA CIVIC I Shuttle (AN, AR),CIVIC II Shuttle (EE),CIVIC III Hatchback (EC, ED, EE),CIVIC III Stufenheck (ED),CRX II (ED, EE)

19502 **Axialgelenk, Spurstange, Inner Tie Rod, Rotule de direction intérieure, barre de connexion**

HONDA CIVIC III Hatchback (EC, ED, EE),CIVIC III Stufenheck (ED),CRX II (ED, EE)

19503 **Trag-/Führungsgelenk, Ball Joint, Rotule de suspension**

HONDA ACCORD III Aerodeck (CA5),ACCORD III (CA4, CA5),CIVIC II Shuttle (EE),CIVIC III Hatchback (EC, ED, EE),CIVIC III Stufenheck (ED),CIVIC V Aerodeck,CIVIC V Coupe (EJ6, EJ8),CIVIC V (EJ9, EK3/4),CIVIC V Fastback (MB),CIVIC V Hatchback (EJ9, EK1/3/4),CR-V I (RD),CRX II (ED, EE),CRX III (EH, EG),PRELUDE II (AB),PRELUDE III (BA),PRELUDE IV (BB),PRELUDE V (BB)

19504 **Spurstangenkopf, Tie Rod End, Rotule de barre de connexion**

HONDA ACCORD III (CA4, CA5),ACCORD IV Aerodeck (CB8, CB9),ACCORD IV (CB3, CB7),ACCORD IV Coupe (CC1),ACCORD V Aerodeck (CE),ACCORD V (CC7, CD),ACCORD V Coupe (CD7, CD9),ACCORD VI (CE, CF),ACCORD VII Aerodeck (CM_),ROVER 600 (RH)

19505 **Spurstangenkopf, Tie Rod End, Rotule de barre de connexion**

HONDA ACCORD III (CA4, CA5),ACCORD IV Aerodeck (CB8, CB9),ACCORD IV (CB3, CB7),ACCORD IV Coupe (CC1),ACCORD V Aerodeck (CE),ACCORD V (CC7, CD),ACCORD V Coupe (CD7, CD9),ACCORD VI (CE, CF),ACCORD VII Aerodeck (CM_),ROVER 600 (RH)

19506 **Axialgelenk, Spurstange, Inner Tie Rod, Rotule de direction intérieure, barre de connexion**

HONDA ACCORD IV Aerodeck (CB8, CB9),ACCORD IV (CB3, CB7),ACCORD IV Coupe (CC1),ACCORD V Aerodeck (CE),ACCORD V (CC7, CD),ACCORD VI (CE, CF),ROVER 600 (RH)

19507 **Trag-/Führungsgelenk, Ball Joint, Rotule de suspension**

HONDA ACCORD IV Aerodeck (CB8, CB9),ACCORD IV (CB3, CB7),ACCORD IV Coupe (CC1),ACCORD V Aerodeck (CE),ACCORD V Coupe (CD7, CD9),ACCORD VI (CE, CF),ACCORD VII (CG, CK),ACCORD VII Coupe (CG),ACCORD VII Hatchback (CH),SHUTTLE (RA),ROVER 600 (RH)

19508 **Spurstangenkopf, Tie Rod End, Rotule de barre de connexion**

HONDA CIVIC IV Coupe (EJ),CIVIC IV (EG, EH),CIVIC IV Fastback (MA, MB),CIVIC IV Hatchback (EG),CIVIC V Aerodeck,CIVIC V (EJ9, EK3/4),CIVIC V Fastback (MB),CIVIC V Hatchback (EJ9, EK1/3/4),CIVIC VI Coupe (EM),CR-V I (RD),CRX III (EH, EG),INTEGRA Coupe (DC2, DC4),ROVER 400 Hatchback (RT),400 (RT),400 Tourer (XW),400 (XW),45 (RT),45 Stufenheck (RT)

19509 **Spurstangenkopf, Tie Rod End, Rotule de barre de connexion**

HONDA CIVIC IV Coupe (EJ),CIVIC IV (EG, EH),CIVIC IV Fastback (MA, MB),CIVIC IV Hatchback (EG),CIVIC V Aerodeck,CIVIC V (EJ9, EK3/4),CIVIC V Fastback (MB),CIVIC V Hatchback (EJ9, EK1/3/4),CIVIC VI Coupe (EM),CR-V I (RD),CRX III (EH, EG),INTEGRA Coupe (DC2, DC4),ROVER 400 Hatchback (RT),400 (RT),400 Tourer (XW),400 (XW),45 (RT),45 Stufenheck (RT)

19510 **Spurstangenkopf, Tie Rod End, Rotule de barre de connexion**

HYUNDAI PONY (X-2),PONY/EXCEL Stufenheck (X-2),S COUPE (SLC)

19511 **Trag-/Führungsgelenk, Ball Joint, Rotule de suspension**

HYUNDAI PONY (X-2),PONY/EXCEL Stufenheck (X-2),S COUPE (SLC)

19512 **Spurstangenkopf, Tie Rod End, Rotule de barre de connexion**

HYUNDAI ACCENT Stufenheck (X-3),ACCENT (X-3),COUPE (RD),LANTRA I (J-1),SONATA I (Y-2),SONATA II (Y-3)

19513 **Trag-/Führungsgelenk, Ball Joint, Rotule de suspension**

HYUNDAI LANTRA I (J-1)

19515 **Axialgelenk, Spurstange, Inner Tie Rod, Rotule de direction intérieure, barre de connexion**

HYUNDAI PONY (X-2),PONY/EXCEL Stufenheck (X-2)

19516 **Stange/Strebe, Stabilisator, Link Stabiliser, Entretoise/tige, stabilisateur**

MAZDA DEMIO (DW),MX-3 (EC)

19517 **Spurstangenkopf, Tie Rod End, Rotule de barre de connexion**

DAEWOO TICO (KLY3)

19518 **Lenker, Radaufhängung, Track Control Arm, Bras de liaison, suspension de roue**

CHEVROLET MATIZ,DAEWOO MATIZ (KLYA),TICO (KLY3),SUZUKI ALTO I (SS80),ALTO II (EC),ALTO III (EF)

19519 **Trag-/Führungsgelenk, Ball Joint, Rotule de suspension**

DAEWOO NUBIRA (KLAJ),NUBIRA Stufenheck (KLAJ),NUBIRA Wagon (KLAJ)

19520 **Spurstangenkopf, Tie Rod End, Rotule de barre de connexion**

NISSAN SUNNY III Hatchback (N14),SUNNY III Liftback (N14),SUNNY III (N14),SUNNY III Traveller (Y10)

19521 **Axialgelenk, Spurstange, Inner Tie Rod, Rotule de direction intérieure, barre de connexion**

NISSAN PRIMERA Traveller (WP11),PRIMERA Traveller (W10),SUNNY III Hatchback (N14),SUNNY III Liftback (N14),SUNNY III (N14),SUNNY III Traveller (Y10),SUNNY Kasten (Y10),100 NX (B13)

19522 **Trag-/Führungsgelenk, Ball Joint, Rotule de suspension**

NISSAN BLUEBIRD Coupe (910),BLUEBIRD Hatchback (T72, T12),BLUEBIRD Station Wagon (WU11),BLUEBIRD Traveller (W910),BLUEBIRD (T72 , T12),BLUEBIRD (U11),BLUEBIRD (910),PRIMERA Hatchback (P10),PRIMERA Hatchback (P11),PRIMERA (P10),PRIMERA (P11),PRIMERA Traveller (WP11),PRIMERA Traveller (W10),SUNNY II Coupe (B12),SUNNY II (N13),SUNNY II Traveller (B12),SUNNY III Hatchback (N14),SUNNY III Liftback (N14),SUNNY III (N14),SUNNY III Traveller (Y10),SUNNY Kasten (Y10),100 NX (B13)

19523 **Spurstangenkopf, Tie Rod End, Rotule de barre de connexion**

NISSAN PRIMERA Hatchback (P10),PRIMERA Hatchback (P11),PRIMERA (P10),PRIMERA (P11),PRIMERA Traveller (WP11),SERENA (C23M),SUNNY III Traveller (Y10),SUNNY Kasten (Y10),VANETTE CARGO Bus (HC 23),VANETTE CARGO Kasten (HC 23)

19524 **Trag-/Führungsgelenk, Ball Joint, Rotule de suspension**

NISSAN ALMERA II Hatchback (N16),ALMERA II (N16),PRIMERA Hatchback (P10),PRIMERA Hatchback (P11),PRIMERA (P10),PRIMERA (P11),PRIMERA Traveller (WP11),SUNNY II Coupe (B12),SUNNY II Hatchback (N13),SUNNY II (N13),SUNNY II Traveller (B12),SUNNY III Hatchback (N14)

19525 **Spurstangenkopf, Tie Rod End, Rotule de barre de connexion**

NISSAN MICRA (K11)

19526 **Trag-/Führungsgelenk, Ball Joint, Rotule de suspension**

NISSAN MICRA (K11)

19527HPS **Stange/Strebe, Stabilisator, Link Stabiliser, Entretoise/tige, stabilisateur**

NISSAN MICRA (K11)

19528 **Spurstangenkopf, Tie Rod End, Rotule de barre de connexion**

NISSAN ALMERA I Hatchback (N15),ALMERA I (N15)

19529HPS **Stange/Strebe, Stabilisator, Link Stabiliser, Entretoise/tige, stabilisateur**

NISSAN PRIMERA Hatchback (P10),PRIMERA Hatchback (P11),PRIMERA (P10),PRIMERA (P11),PRIMERA Traveller (WP11),PRIMERA Traveller (W10)

19530 **Axialgelenk, Spurstange, Inner Tie Rod, Rotule de direction intérieure, barre de connexion**

NISSAN MICRA (K10),PRIMERA Hatchback (P10),PRIMERA (P10),PRIMERA Traveller (W10)

19531 **Spurstangenkopf, Tie Rod End, Rotule de barre de connexion**

DAIHATSU HIJET I Bus,HIJET I Kasten,HIJET II Bus (S85),HIJET II Kasten (S85)

19532 **Spurstangenkopf, Tie Rod End, Rotule de barre de connexion**

DAIHATSU HIJET I Bus,HIJET I Kasten,HIJET II Bus (S85),HIJET II Kasten (S85)

19533 **Spurstangenkopf, Tie Rod End, Rotule de barre de connexion**

FORD MAVERICK (UDS, UNS),NISSAN PICK UP (D21),TERRANO I (WD21),TERRANO II (R20)

19534 **Spurstangenkopf, Tie Rod End, Rotule de barre de connexion**

FORD MAVERICK (UDS, UNS),NISSAN PICK UP (D21),TERRANO I (WD21),TERRANO II (R20)

19535 **Trag-/Führungsgelenk, Ball Joint, Rotule de suspension**

FORD MAVERICK (UDS, UNS),NISSAN PATHFINDER (R50),PICK UP (D21),TERRANO I (WD21),TERRANO II (R20),URVAN Bus (E23),URVAN Bus (E24),URVAN Kasten (E23),URVAN Kasten (E24)

19536 **Trag-/Führungsgelenk, Ball Joint, Rotule de suspension**

NISSAN PICK UP (D21),URVAN Bus (E24),URVAN Kasten (E24)

19537 **Trag-/Führungsgelenk, Ball Joint, Rotule de suspension**

NISSAN VANETTE Bus (C22),VANETTE Bus (KC120),VANETTE Kasten (C22)

19538 **Stange/Strebe, Stabilisator, Link Stabiliser, Entretoise/tige, stabilisateur**

NISSAN MAXIMA QX (A33)

19539 **Stange/Strebe, Stabilisator, Link Stabiliser, Entretoise/tige, stabilisateur**

NISSAN MAXIMA QX (A33)

19540 **Spurstangenkopf, Tie Rod End, Rotule de barre de connexion**

HYUNDAI COUPE (RD),LANTRA I (J-1),MITSUBISHI CARISMA (DA_),CARISMA Stufenheck (DA_),COLT II (C1_A),COLT III (C5_A),COLT IV (CA_A),COLT V (CJ_A),LANCER III (C1_A, C6_A),LANCER III Station Wagon (C1_V, C3_V),LANCER IV (C6_A, C7_A),LANCER IV Stufenheck (C6_A),LANCER V (CB/D_A),LANCER V Station Wagon (CB_W, CD_W),LANCER VI (CK/P_A),SPACE STAR (DG0),PROTON PERSONA 300 (C9_M),PERSONA 400 (C9_S),PERSONA 400 Hatchback (C9_C, C9_S)

19541 **Axialgelenk, Spurstange, Inner Tie Rod, Rotule de direction intérieure, barre de connexion**

MITSUBISHI COLT II (C1_A),LANCER III (C1_A, C6_A),LANCER III Station Wagon (C1_V, C3_V)

19542 **Trag-/Führungsgelenk, Ball Joint, Rotule de suspension**

HYUNDAI COUPE (RD),PONY,PONY Stufenheck,PONY Wagon,MITSUBISHI CELESTE (A7_),COLT II (C1_A),COLT LANCER (A7_),COLT LANCER Station Wagon (A7_K),GALANT I (A12_),GALANT I Station Wagon (A12_V),GALANT II (A16_),GALANT II Station Wagon (A16_V),LANCER F II (A17_),LANCER I (A17_),LANCER III (C1_A, C6_A),LANCER III Station Wagon (C1_V, C3_V),SAPPORO I (A12_),SAPPORO II (A16_A)

19543HPS **Stange/Strebe, Stabilisator, Link Stabiliser, Entretoise/tige, stabilisateur**

MITSUBISHI COLT III (C5_A),GALANT III (E1_A),GALANT IV (E3_A),GALANT IV Stufenheck (E3_A),LANCER IV (C6_A, C7_A),LANCER IV Stufenheck (C6_A),PAJERO PININ (H6_W, H7_W)

19544 **Stange/Strebe, Stabilisator, Link Stabiliser, Entretoise/tige, stabilisateur**

MITSUBISHI COLT II (C1_A),COLT III (C5_A),COLT IV (CA_A),COLT LANCER (A7_),COLT LANCER Station Wagon (A7_K),COLT V (CJ_A),LANCER III (C1_A, C6_A),LANCER III Station Wagon (C1_V, C3_V),LANCER IV (C6_A, C7_A),LANCER IV Stufenheck (C6_A),LANCER V (CB/D_A),LANCER V Station Wagon (CB_W, CD_W)

19545 **Spurstangenkopf, Tie Rod End, Rotule de barre de connexion**

MITSUBISHI PAJERO I Canvas Top (L04_G),PAJERO I (L04_G, L14_G)

19546 **Spurstangenkopf, Tie Rod End, Rotule de barre de connexion**

MITSUBISHI PAJERO I Canvas Top (L04_G),PAJERO I (L04_G, L14_G)

19547 **Spurstangenkopf, Tie Rod End, Rotule de barre de connexion**

HYUNDAI LANTRA I (J-1),MITSUBISHI CARISMA (DA_),CARISMA Stufenheck (DA_),COLT II (C1_A),COLT III (C5_A),COLT IV (CA_A),COLT V (CJ_A),LANCER F II (A17_),LANCER III (C1_A, C6_A),LANCER III Station Wagon (C1_V, C3_V),LANCER IV (C6_A, C7_A),LANCER IV Stufenheck (C6_A),LANCER V (CB/D_A),LANCER V Station Wagon (CB_W, CD_W),LANCER VI (CK/P_A),SPACE STAR (DG0),PROTON PERSONA 300 (C9_M),PERSONA 400 (C9_S),PERSONA 400 Hatchback (C9_C, C9_S),VOLVO S40 I (VS),V40 Kombi (VW)

19548 **Spurstangenkopf, Tie Rod End, Rotule de barre de connexion**

MITSUBISHI L 400 Bus (PAOV),L 400 Kasten (PAOV),PAJERO II Canvas Top (V2_W, V4_W),PAJERO II (V2_W, V4_W),PAJERO SPORT (K90),SPACE GEAR (PA/B/D_V/W)

19549 **Spurstangenkopf, Tie Rod End, Rotule de barre de connexion**

MITSUBISHI L 400 Bus (PAOV),L 400 Kasten (PAOV),PAJERO II Canvas Top (V2_W, V4_W),PAJERO II (V2_W, V4_W),PAJERO SPORT (K90),SPACE GEAR (PA/B/D_V/W)

19550 **Axialgelenk, Spurstange, Inner Tie Rod, Rotule de direction intérieure, barre de connexion**

MITSUBISHI COLT II (C1_A),COLT III (C5_A),COLT IV (CA_A),LANCER III (C1_A, C6_A),LANCER III Station Wagon (C1_V, C3_V),LANCER IV (C6_A, C7_A),LANCER IV Stufenheck (C6_A),LANCER V (CB/D_A)

19551 **Trag-/Führungsgelenk, Ball Joint, Rotule de suspension**

MITSUBISHI L 200 (K__T),L 300 Bus (LO3_P/G, L0_2P),L 300 Bus (P0_W, P1_W, P2_W),L 300 Kasten (L03_P),L 300 Kasten (P0_W, P1_W),L 300 Pritsche/Fahrgestell (L03_P),L 300 Pritsche/Fahrgestell (P1_T),PAJERO I Canvas Top (L04_G),PAJERO I (L04_G, L14_G),STARION (A18_A)

19552 **Trag-/Führungsgelenk, Ball Joint, Rotule de suspension**

MITSUBISHI L 200 (K__T),L 300 Bus (LO3_P/G, L0_2P),PAJERO I Canvas Top (L04_G),PAJERO I (L04_G, L14_G)

19553 **Trag-/Führungsgelenk, Ball Joint, Rotule de suspension**

MITSUBISHI PAJERO II Canvas Top (V2_W, V4_W),PAJERO II (V2_W, V4_W),PAJERO III (V60, V70),PAJERO PININ (H6_W, H7_W)

19554 **Trag-/Führungsgelenk, Ball Joint, Rotule de suspension**

MITSUBISHI PAJERO II Canvas Top (V2_W, V4_W),PAJERO II (V2_W, V4_W),PAJERO III (V60, V70),PAJERO PININ (H6_W, H7_W)

19555 **Trag-/Führungsgelenk, Ball Joint, Rotule de suspension**

MITSUBISHI PAJERO II Canvas Top (V2_W, V4_W),PAJERO II (V2_W, V4_W),PAJERO III (V60, V70),PAJERO PININ (H6_W, H7_W)

19556 **Spurstangenkopf, Tie Rod End, Rotule de barre de connexion**

NISSAN MICRA (K10)

19557 **Spurstangenkopf, Tie Rod End, Rotule de barre de connexion**

DAEWOO KORANDO (KJ),MUSSO (FJ)

19558HPS **Stange/Strebe, Stabilisator, Link Stabiliser, Entretoise/tige, stabilisateur**

CHEVROLET AVEO Schrägheck,AVEO Stufenheck,KALOS,KALOS Stufenheck,REZZO,DAEWOO KALOS (KLAS),KALOS Stufenheck (KLAS),NUBIRA (KLAJ),NUBIRA Stufenheck (KLAJ),NUBIRA Wagon (KLAJ),NUBIRA Wagon (KLAN),REZZO (KLAU)

19559HPS **Stange/Strebe, Stabilisator, Link Stabiliser, Entretoise/tige, stabilisateur**

DAEWOO NUBIRA (KLAJ),NUBIRA Stufenheck (KLAJ),NUBIRA Wagon (KLAJ)

19560 **Spurstangenkopf, Tie Rod End, Rotule de barre de connexion**

TOYOTA CAMRY Liftback (V1),CAMRY Station Wagon (_V2_),CAMRY Stufenheck (V1),CAMRY (_V2_),CARINA E Sportswagon (_T19_),CARINA E Stufenheck (_T19_),CARINA E (_T19_),CARINA II Station Wagon (_T17_),CARINA II Stufenheck (_T15_),CARINA II Stufenheck (_T17_),CARINA II (_T15_),CARINA II (_T17_),CARINA Station Wagon (TA4K, TA6K),CARINA (TA1_),CARINA (TA4L, TA6_L),CELICA Cabriolet (_T16_),CELICA Cabriolet (_T18_),CELICA Cabriolet (_T20_),CELICA Coupe (RA6),CELICA Coupe (TA4C, TA60),CELICA Coupe (T16F),CELICA Coupe (_T18_),CELICA Liftback (T16),CELICA (ST16_),CELICA SUPRA (MA61),CELICA (TA2),CELICA (TA60, RA40, RA6_),CELICA (_T20_),CELICA (ZZT23_),COROLLA Combi (KE),COROLLA Compact (_E10_),COROLLA Compact (_E11_),COROLLA Compact (_E9_),COROLLA Coupe (AE86),COROLLA Coupe (KE),COROLLA (_E10_),COROLLA (_E11_),COROLLA (_E7_),COROLLA (_E8_),COROLLA (_E9_),COROLLA FX Compact (E8B),COROLLA (KE),COROLLA Liftback (_E10_),COROLLA Liftback (_E11_),COROLLA Liftback (_E7_),COROLLA Liftback (_E8_),COROLLA Liftback (_E9_),COROLLA Liftback (KE, TE),COROLLA Station Wagon (_E7_),COROLLA Station Wagon (_E9_),COROLLA Wagon (_E10_),COROLLA Wagon (__E11_),RAV 4 I Cabrio (SXA1_),RAV 4 I (SXA1_),TERCEL (_L1_, _L2_)

19561 **Trag-/Führungsgelenk, Ball Joint, Rotule de suspension**

TOYOTA COROLLA Compact (_E9_),COROLLA Coupe (AE86),COROLLA (_E9_),COROLLA Liftback (_E9_),COROLLA Station Wagon (_E9_)

19562 **Trag-/Führungsgelenk, Ball Joint, Rotule de suspension**

TOYOTA COROLLA Compact (_E9_),COROLLA Coupe (AE86),COROLLA (_E9_),COROLLA Liftback (_E9_),COROLLA Station Wagon (_E9_)

19563 **Trag-/Führungsgelenk, Ball Joint, Rotule de suspension**

TOYOTA AVENSIS Liftback (_T22_),AVENSIS Station Wagon (_T22_),AVENSIS (_T22_),CARINA E Sportswagon (_T19_),CARINA E Stufenheck (_T19_),CARINA E (_T19_),CELICA Cabriolet (_T18_),CELICA Cabriolet (_T20_),CELICA Coupe (_T18_),CELICA (_T20_),COROLLA Compact (_E10_),COROLLA (_E10_),COROLLA Liftback (_E10_),COROLLA Wagon (_E10_),CORONA (RX, RT),CORONA Station Wagon (RT118),PICNIC (_XM10),RAV 4 I Cabrio (SXA1_),RAV 4 I (SXA1_)

19564 **Axialgelenk, Spurstange, Inner Tie Rod, Rotule de direction intérieure, barre de connexion**

TOYOTA COROLLA Compact (_E9_),COROLLA Coupe (AE86),COROLLA (_E9_),COROLLA Liftback (_E9_),COROLLA Station Wagon (_E9_)

19565 **Axialgelenk, Spurstange, Inner Tie Rod, Rotule de direction intérieure, barre de connexion**

TOYOTA COROLLA Compact (_E9_),COROLLA Coupe (AE86),COROLLA (_E9_),COROLLA Liftback (_E9_),COROLLA Station Wagon (_E9_)

19566 **Axialgelenk, Spurstange, Inner Tie Rod, Rotule de direction intérieure, barre de connexion**

TOYOTA COROLLA Compact (_E10_),COROLLA Compact (_E11_),COROLLA (_E10_),COROLLA (_E11_),COROLLA Liftback (_E10_),COROLLA Liftback (_E11_),COROLLA Wagon (_E10_),COROLLA Wagon (__E11_)

19567 **Axialgelenk, Spurstange, Inner Tie Rod, Rotule de direction intérieure, barre de connexion**

TOYOTA COROLLA Compact (_E10_),COROLLA (_E10_),COROLLA Liftback (_E10_),COROLLA Wagon (_E10_)

19568 **Trag-/Führungsgelenk, Ball Joint, Rotule de suspension**

TOYOTA COROLLA Compact (_E9_),COROLLA (_E9_),COROLLA Liftback (_E9_),COROLLA Station Wagon (_E9_)

19569 **Trag-/Führungsgelenk, Ball Joint, Rotule de suspension**

TOYOTA COROLLA Compact (_E9_),COROLLA (_E9_),COROLLA Liftback (_E9_),COROLLA Station Wagon (_E9_)

19571 **Trag-/Führungsgelenk, Ball Joint, Rotule de suspension**

TOYOTA CARINA E Sportswagon (_T19_),CARINA E Stufenheck (_T19_),CARINA E (_T19_),CELICA Cabriolet (_T20_),CELICA (_T20_)

19572 **Stange/Strebe, Stabilisator, Link Stabiliser, Entretoise/tige, stabilisateur**

TOYOTA COROLLA Compact (_E11_),COROLLA (_E11_),COROLLA Liftback (_E11_),COROLLA Wagon (__E11_)

19573 **Stange/Strebe, Stabilisator, Link Stabiliser, Entretoise/tige, stabilisateur**

TOYOTA CAMRY Station Wagon (_V10),CAMRY Station Wagon (_V2_),CAMRY (_V1_),CAMRY (_V2_),CAMRY (_V20),CELICA Cabriolet (_T20_),CELICA (_T20_),COROLLA Compact (_E10_),COROLLA Compact (_E11_),COROLLA (_E10_),COROLLA (_E11_),COROLLA Liftback (_E10_),COROLLA Liftback (_E11_),COROLLA Wagon (_E10_),COROLLA Wagon (__E11_),RAV 4 I (SXA1_)

19574 **Stange/Strebe, Stabilisator, Link Stabiliser, Entretoise/tige, stabilisateur**

TOYOTA CAMRY Station Wagon (_V2_),CAMRY (_V2_),COROLLA Compact (_E9_),COROLLA (_E9_),COROLLA Liftback (_E9_),COROLLA Station Wagon (_E9_)

19575 **Stange/Strebe, Stabilisator, Link Stabiliser, Entretoise/tige, stabilisateur**

TOYOTA AVENSIS Liftback (_T22_),AVENSIS Station Wagon (_T22_),AVENSIS (_T22_),CARINA E Sportswagon (_T19_),CARINA E Stufenheck (_T19_),CARINA E (_T19_),CARINA II Station Wagon (_T17_),CARINA II Stufenheck (_T17_),CARINA II (_T17_)

19576 **Stange/Strebe, Stabilisator, Link Stabiliser, Entretoise/tige, stabilisateur**

TOYOTA AVENSIS Liftback (_T22_),AVENSIS Station Wagon (_T22_),AVENSIS (_T22_),CARINA E Sportswagon (_T19_),CARINA E Stufenheck (_T19_),CARINA E (_T19_),CARINA II Station Wagon (_T17_),CARINA II Stufenheck (_T17_),CARINA II (_T17_)

19577 **Stange/Strebe, Stabilisator, Link Stabiliser, Entretoise/tige, stabilisateur**

TOYOTA AVENSIS Liftback (_T22_),AVENSIS Station Wagon (_T22_),AVENSIS (_T22_),CARINA E Sportswagon (_T19_),CARINA E Stufenheck (_T19_),CARINA E (_T19_),CELICA Cabriolet (_T20_),CELICA (_T20_),CELICA (ZZT23_),COROLLA Compact (_E10_),COROLLA (_E10_),COROLLA Liftback (_E10_),COROLLA Wagon (_E10_)

19578 **Stange/Strebe, Stabilisator, Link Stabiliser, Entretoise/tige, stabilisateur**

TOYOTA AVENSIS Liftback (_T22_),AVENSIS Station Wagon (_T22_),AVENSIS (_T22_),CARINA E Sportswagon (_T19_),CARINA E Stufenheck (_T19_),CARINA E (_T19_),CELICA Cabriolet (_T20_),CELICA (_T20_),CELICA (ZZT23_),COROLLA Compact (_E10_),COROLLA (_E10_),COROLLA Liftback (_E10_),COROLLA Wagon (_E10_)

19580 **Spurstangenkopf, Tie Rod End, Rotule de barre de connexion**

KIA PRIDE (DA),PRIDE Kombi,MAZDA 121 I (DA),121 II (DB),323 I Station Wagon (FA),323 II (BD),323 II Hatchback (BD),323 III (BF),323 III Hatchback (BF),323 III Station Wagon (BW)

19581 **Axialgelenk, Spurstange, Inner Tie Rod, Rotule de direction intérieure, barre de connexion**

MAZDA 323 C V (BA),323 F V (BA),323 III (BF),323 III Hatchback (BF),323 III Station Wagon (BW),323 P V (BA),323 S V (BA)

19582 **Trag-/Führungsgelenk, Ball Joint, Rotule de suspension**

MAZDA 323 I Station Wagon (FA),323 II (BD),323 II Hatchback (BD),323 III (BF),323 III Hatchback (BF),323 III Station Wagon (BW),929 II Coupe (HB),929 II (HB),929 II Kombi (HV)

19583 **Spurstangenkopf, Tie Rod End, Rotule de barre de connexion**

MAZDA DEMIO (DW),MX-3 (EC),RX 7 III (FD),121 II (DB),323 C IV (BG),323 C V (BA),323 F IV (BG),323 F V (BA),323 III Station Wagon (BW),323 P V (BA),323 S IV (BG),323 S V (BA)

19584 **Axialgelenk, Spurstange, Inner Tie Rod, Rotule de direction intérieure, barre de connexion**

MAZDA 323 C IV (BG),323 C V (BA),323 F IV (BG),323 F V (BA),323 P V (BA),323 S IV (BG),323 S V (BA)

19585	**Trag-/Führungsgelenk, Ball Joint, Rotule de suspension**
	MAZDA MX-3 (EC),323 C IV (BG),323 C V (BA),323 F IV (BG),323 F V (BA),323 III Station Wagon (BW),323 S IV (BG),323 S V (BA)
19587	**Trag-/Führungsgelenk, Ball Joint, Rotule de suspension**
	MAZDA 626 III Hatchback (GD),626 III Station Wagon (GV)
19588	**Axialgelenk, Spurstange, Inner Tie Rod, Rotule de direction intérieure, barre de connexion**
	MAZDA 626 II (GC),626 II Hatchback (GC),626 III Coupe (GD),626 III (GD),626 III Hatchback (GD),626 III Station Wagon (GV)
19589	**Spurstangenkopf, Tie Rod End, Rotule de barre de connexion**
	FORD USA PROBE I,PROBE II (ECP),MAZDA 626 IV (GE),626 IV Hatchback (GE)
19590HPS	**Stange/Strebe, Stabilisator, Link Stabiliser, Entretoise/tige, stabilisateur**
	FORD USA PROBE II (ECP),KIA CLARUS Kombi (GC),CLARUS (K9A),MAZDA MX-5 II (NB),MX-6 (GE),XEDOS 6 (CA),323 C IV (BG),323 C V (BA),323 F V (BA),323 F VI (BJ),323 P V (BA),323 S V (BA),323 S VI (BJ),626 IV (GE),626 IV Hatchback (GE),626 V (GF),626 V Hatchback (GF),626 V Station Wagon (GW)
19591HPS	**Stange/Strebe, Stabilisator, Link Stabiliser, Entretoise/tige, stabilisateur**
	FORD USA PROBE II (ECP),KIA CLARUS Kombi (GC),CLARUS (K9A),MAZDA MX-5 II (NB),MX-6 (GE),XEDOS 6 (CA),323 C V (BA),323 F V (BA),323 P V (BA),323 S V (BA),323 S VI (BJ),626 IV (GE),626 IV Hatchback (GE),626 V (GF),626 V Hatchback (GF),626 V Station Wagon (GW)
19592HPS	**Stange/Strebe, Stabilisator, Link Stabiliser, Entretoise/tige, stabilisateur**
	FORD USA PROBE I,PROBE II (ECP),MAZDA 626 III Station Wagon (GV),626 IV (GE),626 IV Hatchback (GE)
19593HPS	**Stange/Strebe, Stabilisator, Link Stabiliser, Entretoise/tige, stabilisateur**
	MAZDA 323 C V (BA),323 F V (BA),323 S V (BA)
19594	**Axialgelenk, Spurstange, Inner Tie Rod, Rotule de direction intérieure, barre de connexion**
	MAZDA MX-3 (EC),323 C IV (BG),323 F IV (BG),323 III Station Wagon (BW),323 S IV (BG)
19595	**Spurstangenkopf, Tie Rod End, Rotule de barre de connexion**
	MAZDA MX-6 (GE),XEDOS 6 (CA),626 II (GC),626 II Hatchback (GC),626 III Coupe (GD),626 III (GD),626 III Hatchback (GD),626 III Station Wagon (GV),929 II Coupe (HB),929 II (HB),929 II Kombi (HV),929 III (HC)
19597	**Spurstangenkopf, Tie Rod End, Rotule de barre de connexion**
	DAIHATSU APPLAUSE I (A101, A111),APPLAUSE II (A101),CHARADE II (G11, G30),CHARADE III (G100, G101, G102),CHARADE IV (G200, G202),CHARADE IV Stufenheck (G203)
19598	**Spurstangenkopf, Tie Rod End, Rotule de barre de connexion**
	DAIHATSU APPLAUSE I (A101, A111),APPLAUSE II (A101),CHARADE III (G100, G101, G102),CHARADE IV (G200, G202),CHARADE IV Stufenheck (G203)
19599	**Axialgelenk, Spurstange, Inner Tie Rod, Rotule de direction intérieure, barre de connexion**
	FORD USA PROBE I,PROBE II (ECP),MAZDA MX-6 (GE),XEDOS 6 (CA),626 IV (GE),626 IV Hatchback (GE)
19600HPS	**Stange/Strebe, Stabilisator, Link Stabiliser, Entretoise/tige, stabilisateur**
	OPEL COMBO Kasten/Kombi,COMBO Tour,CORSA C (F08, F68),CORSA C Kasten (F08, W5L),MERIVA,TIGRA TwinTop,VECTRA B Caravan (31_),VECTRA B CC (38_),VECTRA B (36_),SAAB 9-5 Kombi (YS3E),9-5 (YS3E),VAUXHALL COMBO,CORSA Mk II,CORSAVAN MK II,MERIVA,TIGRA TwinTop,VECTRA,VECTRA CC,VECTRA Estate
19601	**Stange/Strebe, Stabilisator, Link Stabiliser, Entretoise/tige, stabilisateur**
	FORD COUGAR (EC_),MONDEO I (GBP),MONDEO I Kombi (BNP),MONDEO I Stufenheck (GBP),MONDEO II (BAP),MONDEO II Kombi (BNP),MONDEO II Stufenheck (BFP)
19602HPS	**Stange/Strebe, Stabilisator, Link Stabiliser, Entretoise/tige, stabilisateur**
	OPEL OMEGA A Caravan (66_, 67_),OMEGA A (16_, 17_, 19_),SENATOR B (29_),VAUXHALL CARLTON Mk II,CARLTON Mk II Estate,CARLTON Mk III,CARLTON Mk III Estate,SENATOR Mk II
19603HPS	**Stange/Strebe, Stabilisator, Link Stabiliser, Entretoise/tige, stabilisateur**
	AUDI CABRIOLET (8G7, B4),COUPE (89, 8B),80 Avant (8C, B4),80 (8C, B4)
19604HPS	**Stange/Strebe, Stabilisator, Link Stabiliser, Entretoise/tige, stabilisateur**
	FORD COURIER Kasten (F3L, F5L),ESCORT V Cabriolet (ALL),ESCORT V (GAL),ESCORT V Kombi (GAL, AVL),ESCORT VI Cabriolet (ALL),ESCORT VI (GAL),ESCORT VI Kombi (GAL),ESCORT VI Stufenheck (GAL),ESCORT ´91 Express (AVL),FIESTA III (GFJ),FIESTA Kasten (JV_),ORION III (GAL),STREET KA,MAZDA 121 III (JASM, JBSM)
19605HPS	**Stange/Strebe, Stabilisator, Link Stabiliser, Entretoise/tige, stabilisateur**
	FORD COUGAR (EC_),MONDEO I (GBP),MONDEO I Kombi (BNP),MONDEO I Stufenheck (GBP),MONDEO II (BAP),MONDEO II Kombi (BNP),MONDEO II Stufenheck (BFP)
19606HPS	**Stange/Strebe, Stabilisator, Link Stabiliser, Entretoise/tige, stabilisateur**
	OPEL OMEGA B Caravan (21_, 22_, 23_),OMEGA B (25_, 26_, 27_),VAUXHALL CARLTON Mk III,CARLTON Mk III Estate,OMEGA,OMEGA Estate
19607	**Stange/Strebe, Stabilisator, Link Stabiliser, Entretoise/tige, stabilisateur**
	OPEL ASTRA F Cabriolet (53_B),ASTRA F Caravan (51_, 52_),ASTRA F CC (53_, 54_, 58_, 59_),ASTRA F CLASSIC Caravan,ASTRA F CLASSIC CC,ASTRA F CLASSIC Stufenheck,ASTRA F Van (55_),ASTRA F (56_, 57_),ASTRA G Cabriolet,ASTRA G Caravan (F35_),ASTRA G CC (F48_, F08_),ASTRA G Coupe (F07_),ASTRA G Stufenheck (F69_),CALIBRA A (85_),VECTRA A CC (88_, 89_),VECTRA A (86_, 87_),SAAB 900 II,900 II Cabriolet,900 II Coupe,9-3 Cabriolet (YS3D),9-3 (YS3D),9-5 Kombi (YS3E),9-5 (YS3E),VAUXHALL ASTRA Mk II Convertible,ASTRA Mk III,ASTRA Mk III CC,ASTRA Mk III Convertible,ASTRA Mk III Estate,ASTRA Mk IV,ASTRA Mk IV CC,ASTRA Mk IV Coupe,ASTRA Mk IV Estate,ASTRAVAN Mk III,CALIBRA,CAVALIER Mk III CC,CAVALIER Mk III (87)
19607/8HPS	**Stange/Strebe, Stabilisator, Link Stabiliser, Entretoise/tige, stabilisateur**
	OPEL ASTRA F Cabriolet (53_B),ASTRA F Caravan (51_, 52_),ASTRA F CC (53_, 54_, 58_, 59_),ASTRA F (56_, 57_),CALIBRA A (85_),VECTRA A CC (88_, 89_),VECTRA A (86_, 87_),SAAB 900 I (AC4, AM4),900 I Cabriolet,900 I Combi Coupe,900 II,900 II Cabriolet,900 II Coupe,9-3 Cabriolet (YS3D),9-3 (YS3D),9-5 Kombi (YS3E),9-5 (YS3E)
19608HPS	**Stange/Strebe, Stabilisator, Link Stabiliser, Entretoise/tige, stabilisateur**
	FORD COURIER Kasten (F3L, F5L),COURIER Kasten (J5_, J3_),ESCORT CLASSIC (AAL, ABL),ESCORT CLASSIC Turnier (ANL),ESCORT VII Cabriolet (ALL),ESCORT VII (GAL, AAL, ABL),ESCORT VII Kombi (GAL, ANL),ESCORT VII Stufenheck (GAL, AFL),ESCORT ´95 Express (AVL),FIESTA IV (JA_, JB_),FIESTA Kasten (JV_),FOCUS (DAW, DBW),FOCUS Kombi (DNW),FOCUS Stufenheck (DFW),KA (RB_),PUMA (EC_)
19609HPS	**Stange/Strebe, Stabilisator, Link Stabiliser, Entretoise/tige, stabilisateur**
	FORD FOCUS (DAW, DBW),FOCUS Kombi (DNW),FOCUS Stufenheck (DFW)

19610 **Spurstangenkopf, Tie Rod End, Rotule de barre de connexion**

OPEL ASTRA F Cabriolet (53_B),ASTRA F Caravan (51_, 52_),ASTRA F CC (53_, 54_, 58_, 59_),ASTRA F CLASSIC Caravan,ASTRA F CLASSIC CC,ASTRA F CLASSIC Stufenheck,ASTRA F Van (55_),ASTRA F (56_, 57_),ASTRA G Caravan (F35_),ASTRA G CC (F48_, F08_),CALIBRA A (85_),VECTRA A CC (88_, 89_),VECTRA A (86_, 87_),SAAB 900 II,900 II Cabriolet,900 II Coupe,9-3 Cabriolet (YS3D),9-3 (YS3D),VAUXHALL ASTRA Mk II Convertible,ASTRA Mk III,ASTRA Mk III CC,ASTRA Mk III Convertible,ASTRA Mk III Estate,ASTRA Mk IV CC,ASTRAVAN Mk III,CALIBRA,CAVALIER Mk III CC,CAVALIER Mk III (87)

19611 **Spurstangenkopf, Tie Rod End, Rotule de barre de connexion**

OPEL ASTRA F Cabriolet (53_B),ASTRA F Caravan (51_, 52_),ASTRA F CC (53_, 54_, 58_, 59_),ASTRA F CLASSIC Caravan,ASTRA F CLASSIC CC,ASTRA F CLASSIC Stufenheck,ASTRA F Van (55_),ASTRA F (56_, 57_),CALIBRA A (85_),VECTRA A CC (88_, 89_),VECTRA A (86_, 87_),SAAB 900 II,900 II Cabriolet,900 II Coupe,9-3 Cabriolet (YS3D),9-3 (YS3D),VAUXHALL ASTRA Mk II Convertible,ASTRA Mk III,ASTRA Mk III CC,ASTRA Mk III Convertible,ASTRA Mk III Estate,ASTRAVAN Mk III,CALIBRA,CAVALIER Mk III CC,CAVALIER Mk III (87)

19612 **Trag-/Führungsgelenk, Ball Joint, Rotule de suspension**

OPEL ASTRA F Cabriolet (53_B),ASTRA F Caravan (51_, 52_),ASTRA F CC (53_, 54_, 58_, 59_),ASTRA F Van (55_),ASTRA F (56_, 57_),CALIBRA A (85_),VECTRA A CC (88_, 89_),VECTRA A (86_, 87_),VECTRA B Caravan (31_),VECTRA B CC (38_),VECTRA B (36_),VAUXHALL ASTRA Mk II Convertible,ASTRA Mk III,ASTRA Mk III CC,ASTRA Mk III Convertible,ASTRA Mk III Estate,ASTRAVAN Mk III,CALIBRA,CAVALIER Mk III CC,CAVALIER Mk III (87)

19613 **Spurstangenkopf, Tie Rod End, Rotule de barre de connexion**

OPEL OMEGA A Caravan (66_, 67_),OMEGA A (16_, 17_, 19_),SENATOR A (29_),SENATOR B (29_)

19614 **Spurstangenkopf, Tie Rod End, Rotule de barre de connexion**

OPEL OMEGA A Caravan (66_, 67_),OMEGA A (16_, 17_, 19_),SENATOR A (29_),SENATOR B (29_)

19615 **Spurstangenkopf, Tie Rod End, Rotule de barre de connexion**

OPEL OMEGA A Caravan (66_, 67_),OMEGA A (16_, 17_, 19_),SENATOR A (29_),SENATOR B (29_)

19616 **Spurstangenkopf, Tie Rod End, Rotule de barre de connexion**

OPEL OMEGA A Caravan (66_, 67_),OMEGA A (16_, 17_, 19_),SENATOR A (29_),SENATOR B (29_)

19617 **Trag-/Führungsgelenk, Ball Joint, Rotule de suspension**

OPEL OMEGA A Caravan (66_, 67_),OMEGA A (16_, 17_, 19_),SENATOR A (29_),SENATOR B (29_),VAUXHALL CARLTON Mk II,CARLTON Mk II Estate,CARLTON Mk III,CARLTON Mk III Estate,SENATOR Mk II

19618 **Trag-/Führungsgelenk, Ball Joint, Rotule de suspension**

OPEL OMEGA A Caravan (66_, 67_),OMEGA A (16_, 17_, 19_),SENATOR A (29_),SENATOR B (29_),VAUXHALL CARLTON Mk II,CARLTON Mk II Estate,CARLTON Mk III,CARLTON Mk III Estate,SENATOR Mk II

19619 **Lenker, Radaufhängung, Track Control Arm, Bras de liaison, suspension de roue**

OPEL ASTRA F Cabriolet (53_B),ASTRA F Caravan (51_, 52_),ASTRA F CC (53_, 54_, 58_, 59_),ASTRA F CLASSIC CC,ASTRA F Van (55_),ASTRA F (56_, 57_),CALIBRA A (85_),VECTRA A CC (88_, 89_),VECTRA A (86_, 87_),VAUXHALL ASTRA Mk III,ASTRA Mk III CC,ASTRA Mk III Convertible,ASTRA Mk III Estate,ASTRAVAN Mk III,CALIBRA,CAVALIER Mk III CC,CAVALIER Mk III (87)

19620 **Lenker, Radaufhängung, Track Control Arm, Bras de liaison, suspension de roue**

OPEL ASTRA F Cabriolet (53_B),ASTRA F Caravan (51_, 52_),ASTRA F CC (53_, 54_, 58_, 59_),ASTRA F CLASSIC CC,ASTRA F Van (55_),ASTRA F (56_, 57_),CALIBRA A (85_),VECTRA A CC (88_, 89_),VECTRA A (86_, 87_),VAUXHALL ASTRA Mk III,ASTRA Mk III CC,ASTRA Mk III Convertible,ASTRA Mk III Estate,ASTRAVAN Mk III,CALIBRA,CAVALIER Mk III CC,CAVALIER Mk III (87)

19621 **Trag-/Führungsgelenk, Ball Joint, Rotule de suspension**

OPEL ASTRA F CLASSIC Caravan,ASTRA G Cabriolet,ASTRA G Caravan (F35_),ASTRA G CC (F48_, F08_),ASTRA G Coupe (F07_),ASTRA G Kasten (F70),ASTRA G Stufenheck (F69_),ASTRA H,ASTRA H Caravan,ASTRA H GTC,ASTRA H TwinTop,OMEGA B Caravan (21_, 22_, 23_),OMEGA B (25_, 26_, 27_),VECTRA B Caravan (31_),VECTRA B CC (38_),VECTRA B (36_),ZAFIRA,ZAFIRA (F75_),SAAB 9-5 Kombi (YS3E),9-5 (YS3E),VAUXHALL ASTRA Mk III Estate,ASTRA Mk IV,ASTRA Mk IV CC,ASTRA MK IV Convertible,ASTRA Mk IV Coupe,ASTRA Mk IV Estate,ASTRA MK V CC,ASTRA MK V Estate,ASTRA MK V Sport Hatch,ASTRA TwinTop,ASTRAVAN Mk IV,CARLTON Mk III,CARLTON Mk III Estate,OMEGA,OMEGA Estate,VECTRA,VECTRA CC,VECTRA Estate,ZAFIRA

19622 **Lenker, Radaufhängung, Track Control Arm, Bras de liaison, suspension de roue**

OPEL VECTRA B Caravan (31_),VECTRA B CC (38_),VECTRA B (36_)

19623 **Lenker, Radaufhängung, Track Control Arm, Bras de liaison, suspension de roue**

OPEL VECTRA B Caravan (31_),VECTRA B CC (38_),VECTRA B (36_),VAUXHALL VECTRA,VECTRA CC,VECTRA Estate

19624 **Lenker, Radaufhängung, Track Control Arm, Bras de liaison, suspension de roue**

OPEL OMEGA A Caravan (66_, 67_),OMEGA A (16_, 17_, 19_),SENATOR B (29_),VAUXHALL CARLTON Mk III,CARLTON Mk III Estate,SENATOR Mk II

19626 **Spurstangenkopf, Tie Rod End, Rotule de barre de connexion**

OPEL VECTRA B Caravan (31_),VECTRA B CC (38_),VECTRA B (36_),SAAB 9-5 Kombi (YS3E),9-5 (YS3E),VAUXHALL VECTRA,VECTRA CC,VECTRA Estate

19627 **Axialgelenk, Spurstange, Inner Tie Rod, Rotule de direction intérieure, barre de connexion**

OPEL VECTRA B Caravan (31_),VECTRA B CC (38_),VECTRA B (36_),SAAB 9-5 Kombi (YS3E),9-5 (YS3E),VAUXHALL VECTRA,VECTRA CC,VECTRA Estate

19628 **Axialgelenk, Spurstange, Inner Tie Rod, Rotule de direction intérieure, barre de connexion**

OPEL VECTRA B Caravan (31_),VECTRA B CC (38_),VECTRA B (36_),SAAB 9-5 Kombi (YS3E),9-5 (YS3E),VAUXHALL VECTRA,VECTRA CC,VECTRA Estate

19629 **Lenker, Radaufhängung, Track Control Arm, Bras de liaison, suspension de roue**

OPEL OMEGA B Caravan (21_, 22_, 23_),OMEGA B (25_, 26_, 27_)

19630 **Lenker, Radaufhängung, Track Control Arm, Bras de liaison, suspension de roue**

OPEL OMEGA B Caravan (21_, 22_, 23_),OMEGA B (25_, 26_, 27_)

19631 **Spurstangenkopf, Tie Rod End, Rotule de barre de connexion**

OPEL COMBO (71_),CORSA B Kasten (73_),CORSA B (73_, 78_, 79_),CORSA C (F08, F68),TIGRA (95_),VAUXHALL COMBO,CORSA,CORSA Convertible,CORSA Mk II,CORSAVAN,TIGRA

19632 **Trag-/Führungsgelenk, Ball Joint, Rotule de suspension**

OPEL CORSA B (73_, 78_, 79_),TIGRA (95_)

19633 **Lenker, Radaufhängung, Track Control Arm, Bras de liaison, suspension de roue**

OPEL ASTRA G Cabriolet,ASTRA G Caravan (F35_),ASTRA G CC (F48_, F08_),ASTRA G Coupe (F07_),ASTRA G Kasten (F70),ASTRA G Stufenheck (F69_),ZAFIRA (F75_),VAUXHALL ASTRA Mk IV,ASTRA Mk IV CC,ASTRA Mk IV Coupe,ASTRA Mk IV Estate,ZAFIRA

19634 **Lenker, Radaufhängung, Track Control Arm, Bras de liaison, suspension de roue**

OPEL ASTRA G Cabriolet,ASTRA G Caravan (F35_),ASTRA G CC (F48_, F08_),ASTRA G Coupe (F07_),ASTRA G Kasten (F70),ASTRA G Stufenheck (F69_),ZAFIRA (F75_),VAUXHALL ASTRA Mk IV,ASTRA Mk IV CC,ASTRA Mk IV Coupe,ASTRA Mk IV Estate,ZAFIRA

19635 **Lenker, Radaufhängung, Track Control Arm, Bras de liaison, suspension de roue**

OPEL CORSA B (73_, 78_, 79_),TIGRA (95_)

19636 **Lenker, Radaufhängung, Track Control Arm, Bras de liaison, suspension de roue**

OPEL CORSA B (73_, 78_, 79_),TIGRA (95_)

19637 **Spurstangenkopf, Tie Rod End, Rotule de barre de connexion**

OPEL ASTRA G Cabriolet,ASTRA G Caravan (F35_),ASTRA G CC (F48_, F08_),ASTRA G Coupe (F07_),ASTRA G Kasten (F70),ASTRA G Stufenheck (F69_),ZAFIRA (F75_),VAUXHALL ASTRA Mk IV,ASTRA Mk IV CC,ASTRA MK IV Convertible,ASTRA Mk IV Coupe,ASTRA Mk IV Estate,ASTRAVAN Mk IV,ZAFIRA

19638 **Spurstangenkopf, Tie Rod End, Rotule de barre de connexion**

OPEL ASTRA G Cabriolet,ASTRA G Caravan (F35_),ASTRA G CC (F48_, F08_),ASTRA G Coupe (F07_),ASTRA G Kasten (F70),ASTRA G Stufenheck (F69_),ZAFIRA (F75_),VAUXHALL ASTRA Mk IV,ASTRA Mk IV CC,ASTRA Mk IV Coupe,ASTRA Mk IV Estate,ZAFIRA

19639 **Stange/Strebe, Stabilisator, Link Stabiliser, Entretoise/tige, stabilisateur**

OPEL ASTRA G Cabriolet,ASTRA G Caravan (F35_),ASTRA G CC (F48_, F08_),ASTRA G Coupe (F07_),ASTRA G Kasten (F70),ASTRA G Stufenheck (F69_),ASTRA H,ASTRA H Caravan,ASTRA H GTC,ASTRA H TwinTop,ZAFIRA,ZAFIRA (F75_)

19640 **Spurstangenkopf, Tie Rod End, Rotule de barre de connexion**

FORD COURIER Kasten (J5_, J3_),FIESTA IV (JA_, JB_),FIESTA Kasten (JV_),PUMA (EC_),MAZDA 121 III (JASM, JBSM)

19641 **Spurstangenkopf, Tie Rod End, Rotule de barre de connexion**

FORD COURIER Kasten (J5_, J3_),FIESTA IV (JA_, JB_),FIESTA Kasten (JV_),PUMA (EC_),MAZDA 121 III (JASM, JBSM)

19642 **Lenker, Radaufhängung, Track Control Arm, Bras de liaison, suspension de roue**

FORD COURIER Kasten (J5_, J3_),FIESTA IV (JA_, JB_),FIESTA Kasten (JV_),PUMA (EC_),MAZDA 121 III (JASM, JBSM)

19642/1 **Lenker, Radaufhängung, Track Control Arm, Bras de liaison, suspension de roue**

FORD COURIER Kasten (J5_, J3_),FIESTA IV (JA_, JB_),FIESTA Kasten (JV_),PUMA (EC_),MAZDA 121 III (JASM, JBSM)

19643 **Lenker, Radaufhängung, Track Control Arm, Bras de liaison, suspension de roue**

FORD COURIER Kasten (J5_, J3_),FIESTA IV (JA_, JB_),FIESTA Kasten (JV_),PUMA (EC_),MAZDA 121 III (JASM, JBSM)

19643/1 **Lenker, Radaufhängung, Track Control Arm, Bras de liaison, suspension de roue**

FORD COURIER Kasten (J5_, J3_),FIESTA IV (JA_, JB_),FIESTA Kasten (JV_),PUMA (EC_),MAZDA 121 III (JASM, JBSM)

19644 **Axialgelenk, Spurstange, Inner Tie Rod, Rotule de direction intérieure, barre de connexion**

FORD COURIER Kasten (J5_, J3_),FIESTA IV (JA_, JB_),FIESTA Kasten (JV_),PUMA (EC_),MAZDA 121 III (JASM, JBSM)

19644/1 **Spurstange, Rod Assembly, Barre de connexion**

FORD COURIER Kasten (J5_, J3_),FIESTA IV (JA_, JB_),PUMA (EC_),MAZDA 121 III (JASM, JBSM)

19644/2 **Spurstange, Rod Assembly, Barre de connexion**

FORD COURIER Kasten (J5_, J3_),FIESTA IV (JA_, JB_),PUMA (EC_),MAZDA 121 III (JASM, JBSM)

19645 **Spurstangenkopf, Tie Rod End, Rotule de barre de connexion**

FORD KA (RB_),STREET KA

19646 **Spurstangenkopf, Tie Rod End, Rotule de barre de connexion**

FORD COURIER Kasten (F3L, F5L),FIESTA III (GFJ)

19647 **Axialgelenk, Spurstange, Inner Tie Rod, Rotule de direction intérieure, barre de connexion**

FORD MONDEO I (GBP),MONDEO I Kombi (BNP),MONDEO I Stufenheck (GBP)

19648 **Spurstangenkopf, Tie Rod End, Rotule de barre de connexion**

FORD FOCUS (DAW, DBW),FOCUS Kombi (DNW),FOCUS Stufenheck (DFW)

19649 **Spurstangenkopf, Tie Rod End, Rotule de barre de connexion**

FORD FOCUS (DAW, DBW),FOCUS Kombi (DNW),FOCUS Stufenheck (DFW)

19650 **Axialgelenk, Spurstange, Inner Tie Rod, Rotule de direction intérieure, barre de connexion**

FORD FOCUS (DAW, DBW),FOCUS Kombi (DNW),FOCUS Stufenheck (DFW)

19651 **Lenker, Radaufhängung, Track Control Arm, Bras de liaison, suspension de roue**

FORD FOCUS (DAW, DBW),FOCUS Kombi (DNW),FOCUS Stufenheck (DFW)

19652 **Lenker, Radaufhängung, Track Control Arm, Bras de liaison, suspension de roue**

FORD FOCUS (DAW, DBW),FOCUS Kombi (DNW),FOCUS Stufenheck (DFW)

19653 **Trag-/Führungsgelenk, Ball Joint, Rotule de suspension**

FORD FOCUS (DAW, DBW),FOCUS Kombi (DNW),FOCUS Stufenheck (DFW)

19654 **Axialgelenk, Spurstange, Inner Tie Rod, Rotule de direction intérieure, barre de connexion**

FORD SIERRA (GBG, GB4),SIERRA Kombi (BNC),SIERRA Kombi (BNG),SIERRA Schrägheck (GBC),SIERRA Schrägheck (GBC, GBG)

19655 **Axialgelenk, Spurstange, Inner Tie Rod, Rotule de direction intérieure, barre de connexion**

FORD SCORPIO I (GAE, GGE),SCORPIO I Kombi (GGE),SCORPIO I Stufenheck (GGE)

19656 **Lenker, Radaufhängung, Track Control Arm, Bras de liaison, suspension de roue**

FORD COURIER Kasten (J5_, J3_),FIESTA Kasten (JV_)

19657 — **Lenker, Radaufhängung, Track Control Arm, Bras de liaison, suspension de roue**

FORD COURIER Kasten (J5_, J3_),FIESTA Kasten (JV_)

19658 — **Lenker, Radaufhängung, Track Control Arm, Bras de liaison, suspension de roue**

FORD COUGAR (EC_),MONDEO I (GBP),MONDEO I Stufenheck (GBP),MONDEO II (BAP),MONDEO II Stufenheck (BFP)

19659HPS — **Stange/Strebe, Stabilisator, Link Stabiliser, Entretoise/tige, stabilisateur**

FORD SCORPIO I Kombi (GGE),SCORPIO II (GFR, GGR),SCORPIO II Kombi (GNR, GGR)

19660 — **Spurstangenkopf, Tie Rod End, Rotule de barre de connexion**

ALPINA B3 Cabriolet (E30),B3 (E30),B3 Kombi (E30),B6 (E30),C1 (E30),C2 Cabriolet (E30),C2 (E30),RLE Roadster (Z1),BMW Z1,3 Cabriolet (E30),3 (E21),3 (E30),3 Touring (E30)

19661 — **Trag-/Führungsgelenk, Ball Joint, Rotule de suspension**

ALPINA B3 Cabriolet (E30),B3 (E30),B3 Kombi (E30),C1 (E30),C2 Cabriolet (E30),C2 (E30),BMW 3 Cabriolet (E30),3 (E30),3 Touring (E30)

19662 — **Trag-/Führungsgelenk, Ball Joint, Rotule de suspension**

ALPINA B3 Cabriolet (E30),B3 (E30),B3 Kombi (E30),C1 (E30),C2 Cabriolet (E30),C2 (E30),BMW 3 Cabriolet (E30),3 (E30),3 Touring (E30)

19663 — **Spurstangenkopf, Tie Rod End, Rotule de barre de connexion**

ALPINA B3 Cabriolet (E36),B3 Coupe (E36),B3 (E36),B3 Kombi (E36),B6 (E36),B7 Coupe (E24),B8 Cabriolet (E36),B8 Coupe (E36),B8 (E36),B8 Kombi (E36),B9 Coupe (E24),BMW Z3,Z3 Coupe,3 Cabriolet (E36),3 Compact (E36),3 Coupe (E36),3 (E36),3 Touring (E36)

19664 — **Spurstangenkopf, Tie Rod End, Rotule de barre de connexion**

ALPINA B3 Cabriolet (E36),B3 Coupe (E36),B3 (E36),B3 Kombi (E36),B6 (E36),B7 Coupe (E24),B8 Cabriolet (E36),B8 Coupe (E36),B8 (E36),B8 Kombi (E36),B9 Coupe (E24),BMW Z3,Z3 Coupe,3 Cabriolet (E36),3 Compact (E36),3 Coupe (E36),3 (E36),3 Touring (E36)

19665 — **Trag-/Führungsgelenk, Ball Joint, Rotule de suspension**

ALPINA B6 (E36),BMW Z3,Z3 Coupe,3 Cabriolet (E36),3 Compact (E36),3 Coupe (E36),3 (E36),3 Touring (E36)

19666HPS — **Trag-/Führungsgelenk, Ball Joint, Rotule de suspension**

ALPINA B6 (E36),BMW Z3,Z3 Coupe,3 Cabriolet (E36),3 Compact (E36),3 Coupe (E36),3 (E36),3 Touring (E36)

19666/1 — **Trag-/Führungsgelenk, Ball Joint, Rotule de suspension**

ALPINA B6 (E36),BMW Z3,Z3 Coupe,3 Cabriolet (E36),3 Compact (E36),3 Coupe (E36),3 (E36),3 Touring (E36)

19666/2 — **Trag-/Führungsgelenk, Ball Joint, Rotule de suspension**

ALPINA B6 (E36),BMW Z3,Z3 Coupe,3 Cabriolet (E36),3 Compact (E36),3 Coupe (E36),3 (E36),3 Touring (E36)

19667HPS — **Stange/Strebe, Stabilisator, Link Stabiliser, Entretoise/tige, stabilisateur**

ALPINA B6 (E36),BMW Z3,Z3 Coupe,3 Cabriolet (E30),3 Cabriolet (E36),3 Compact (E36),3 Coupe (E36),3 (E30),3 (E36),3 Touring (E30),3 Touring (E36)

19668 — **Spurstangenkopf, Tie Rod End, Rotule de barre de connexion**

BMW 5 (E28),5 (E34),5 Touring (E34),6 (E24),7 (E32),8 (E31)

19669 — **Spurstangenkopf, Tie Rod End, Rotule de barre de connexion**

BMW 5 (E28),5 (E34),5 Touring (E34),6 (E24),7 (E32),8 (E31)

19670HPS — **Lenker, Radaufhängung, Track Control Arm, Bras de liaison, suspension de roue**

BMW Z3,Z3 Coupe,3 Cabriolet (E36),3 Compact (E36),3 Coupe (E36),3 (E36),3 Touring (E36)

19670/1 — **Lenker, Radaufhängung, Track Control Arm, Bras de liaison, suspension de roue**

BMW Z3,Z3 Coupe,3 Cabriolet (E36),3 Compact (E36),3 Coupe (E36),3 (E36),3 Touring (E36)

19671HPS — **Lenker, Radaufhängung, Track Control Arm, Bras de liaison, suspension de roue**

BMW Z3,Z3 Coupe,3 Cabriolet (E36),3 Compact (E36),3 Coupe (E36),3 (E36),3 Touring (E36)

19671/1 — **Lenker, Radaufhängung, Track Control Arm, Bras de liaison, suspension de roue**

BMW Z3,Z3 Coupe,3 Cabriolet (E36),3 Compact (E36),3 Coupe (E36),3 (E36),3 Touring (E36)

19673 — **Lenker, Radaufhängung, Track Control Arm, Bras de liaison, suspension de roue**

ALPINA B10 (E34),B10 Kombi (E34),B7 Coupe (E24),B7 (E28),B9 Coupe (E24),B9 (E28),BMW 5 (E28),5 (E34),5 Touring (E34),6 (E24),7 (E23),7 (E32),7 (E38)

19674 — **Lenker, Radaufhängung, Track Control Arm, Bras de liaison, suspension de roue**

ALPINA B10 (E34),B10 Kombi (E34),B12 (E38),B7 Coupe (E24),B7 (E28),B9 Coupe (E24),B9 (E28),BMW 5 (E28),5 (E34),5 Touring (E34),6 (E24),7 (E23),7 (E32),7 (E38)

19675 — **Spurstange, Rod Assembly, Barre de connexion**

ALPINA B10 (E34),B10 Kombi (E34),B11 (E32),B12 Coupe (E31),B12 (E32),B7 Coupe (E24),B7 (E28),B9 Coupe (E24),B9 (E28),BMW 5 (E28),5 (E34),5 Touring (E34),6 (E24),7 (E32),8 (E31)

19676 — **Axialgelenk, Spurstange, Inner Tie Rod, Rotule de direction intérieure, barre de connexion**

BMW Z4 Coupe,Z4 (E85),3 Cabriolet (E46),3 Compact (E46),3 Coupe (E46),3 (E46),3 Touring (E46)

19678HPS — **Stange/Strebe, Stabilisator, Link Stabiliser, Entretoise/tige, stabilisateur**

ALPINA B10 (E34),B10 Kombi (E34),B11 (E32),B12 Coupe (E31),B12 (E32),B6 (E30),B7 Coupe (E24),B7 (E28),B9 (E28),BMW Z3,Z3 Coupe,3 Cabriolet (E30),3 Cabriolet (E36),3 Compact (E36),3 Coupe (E36),3 (E21),3 (E30),3 (E36),3 Touring (E30),3 Touring (E36),5 (E28),5 (E34),5 Touring (E34),6 (E24),7 (E23),7 (E32),8 (E31)

19679 — **Trag-/Führungsgelenk, Ball Joint, Rotule de suspension**

SEAT TOLEDO I (1L),VW CORRADO (53I),GOLF III (1H1),PASSAT Variant (3A5, 35I),PASSAT (3A2, 35I),VENTO (1H2)

19679/1 — **Trag-/Führungsgelenk, Ball Joint, Rotule de suspension**

SEAT TOLEDO I (1L),VW CORRADO (53I),GOLF III Variant (1H5),GOLF III (1H1),PASSAT Variant (3A5, 35I),PASSAT (3A2, 35I),VENTO (1H2)

19680 — **Trag-/Führungsgelenk, Ball Joint, Rotule de suspension**

AUDI COUPE (89, 8B),80 (89, 89Q, 8A, B3),90 (89, 89Q, 8A, B3)

19681	**Trag-/Führungsgelenk, Ball Joint, Rotule de suspension**
	AUDI COUPE (89, 8B),80 (89, 89Q, 8A, B3),90 (89, 89Q, 8A, B3)
19682	**Spurstange, Rod Assembly, Barre de connexion**
	VW PASSAT Variant (3A5, 35I),PASSAT (3A2, 35I)
19683	**Spurstange, Rod Assembly, Barre de connexion**
	VW PASSAT Variant (3A5, 35I),PASSAT (3A2, 35I)
19684	**Trag-/Führungsgelenk, Ball Joint, Rotule de suspension**
	AUDI CABRIOLET (8G7, B4),COUPE (89, 8B),80 Avant (8C, B4),80 (8C, B4)
19685	**Trag-/Führungsgelenk, Ball Joint, Rotule de suspension**
	AUDI CABRIOLET (8G7, B4),COUPE (89, 8B),80 Avant (8C, B4),80 (8C, B4)
19686	**Lenker, Radaufhängung, Track Control Arm, Bras de liaison, suspension de roue**
	SEAT AROSA (6H),VW POLO Kasten (6NF),POLO (6N1),POLO (6N2)
19686/1	**Lenker, Radaufhängung, Track Control Arm, Bras de liaison, suspension de roue**
	SEAT AROSA (6H),VW POLO Kasten (6NF),POLO (6N1),POLO (6N2)
19687	**Lenker, Radaufhängung, Track Control Arm, Bras de liaison, suspension de roue**
	SEAT AROSA (6H),VW POLO Kasten (6NF),POLO (6N1),POLO (6N2)
19688	**Spurstange, Rod Assembly, Barre de connexion**
	SEAT AROSA (6H),CORDOBA (6K2/C2),VW LUPO (6X1, 6E1),POLO CLASSIC (6KV2),POLO Kasten (6NF),POLO Kasten (86CF),POLO Variant (6KV5),POLO (6N1),POLO (6N2)
19689	**Spurstange, Rod Assembly, Barre de connexion**
	SEAT AROSA (6H),CORDOBA (6K2/C2),VW LUPO (6X1, 6E1),POLO CLASSIC (6KV2),POLO Kasten (6NF),POLO Kasten (86CF),POLO Variant (6KV5),POLO (6N1),POLO (6N2)
19690	**Lenker, Radaufhängung, Track Control Arm, Bras de liaison, suspension de roue**
	VW PASSAT Variant (3A5, 35I),PASSAT (3A2, 35I)
19690/1	**Lenker, Radaufhängung, Track Control Arm, Bras de liaison, suspension de roue**
	VW PASSAT Variant (3A5, 35I),PASSAT (3A2, 35I)
19690/7	**Lenker, Radaufhängung, Track Control Arm, Bras de liaison, suspension de roue**
	VW PASSAT Variant (3A5, 35I),PASSAT (3A2, 35I)
19691	**Lenker, Radaufhängung, Track Control Arm, Bras de liaison, suspension de roue**
	VW PASSAT Variant (3A5, 35I),PASSAT (3A2, 35I)
19691/7	**Lenker, Radaufhängung, Track Control Arm, Bras de liaison, suspension de roue**
	VW PASSAT Variant (3A5, 35I),PASSAT (3A2, 35I)
19692	**Spurstangenkopf, Tie Rod End, Rotule de barre de connexion**
	AUDI 100 Avant (4A, C4),100 (4A, C4)
19693	**Spurstangenkopf, Tie Rod End, Rotule de barre de connexion**
	AUDI 100 Avant (4A, C4),100 (4A, C4)
19694	**Lenker, Radaufhängung, Track Control Arm, Bras de liaison, suspension de roue**
	AUDI A6 Avant (4A, C4),A6 (4A, C4),100 Avant (4A, C4),100 (4A, C4)
19695	**Lenker, Radaufhängung, Track Control Arm, Bras de liaison, suspension de roue**
	AUDI A6 Avant (4A, C4),A6 (4A, C4),100 Avant (4A, C4),100 (4A, C4)
19696	**Spurstange, Rod Assembly, Barre de connexion**
	SEAT AROSA (6H),VW POLO Kasten (6NF),POLO (6N1)
19696/1	**Axialgelenk, Spurstange, Inner Tie Rod, Rotule de direction intérieure, barre de connexion**
	SEAT AROSA (6H),VW POLO Kasten (6NF),POLO (6N1)
19697	**Spurstange, Rod Assembly, Barre de connexion**
	SEAT AROSA (6H),VW POLO Kasten (6NF),POLO (6N1)
19698	**Lenker, Radaufhängung, Track Control Arm, Bras de liaison, suspension de roue**
	ALPINA B10 (E34),B10 Kombi (E34),BMW 5 (E34),5 Touring (E34)
19699	**Lenker, Radaufhängung, Track Control Arm, Bras de liaison, suspension de roue**
	ALPINA B10 (E34),B10 Kombi (E34),BMW 5 (E34),5 Touring (E34)
19700HPS	**Stange/Strebe, Stabilisator, Link Stabiliser, Entretoise/tige, stabilisateur**
	BMW Z4 Coupe,Z4 (E85),3 Cabriolet (E46),3 Compact (E46),3 Coupe (E46),3 (E46),3 Touring (E46),BRILLIANCE BMW 3 SERIES (E46)
19701	**Lenker, Radaufhängung, Track Control Arm, Bras de liaison, suspension de roue**
	FORD KA (RB_)
19701/1	**Lenker, Radaufhängung, Track Control Arm, Bras de liaison, suspension de roue**
	FORD KA (RB_)
19702	**Lenker, Radaufhängung, Track Control Arm, Bras de liaison, suspension de roue**
	FORD KA (RB_)
19702/1	**Lenker, Radaufhängung, Track Control Arm, Bras de liaison, suspension de roue**
	FORD KA (RB_)

19710 **Spurstangenkopf, Tie Rod End, Rotule de barre de connexion**

OPEL KADETT D Caravan (35_, 36_, 45_, 46_),KADETT D (31_-34_, 41_-44_),VAUXHALL ASTRA CC,ASTRA Estate

19711 **Spurstangenkopf, Tie Rod End, Rotule de barre de connexion**

OPEL KADETT D Caravan (35_, 36_, 45_, 46_),KADETT D (31_-34_, 41_-44_),VAUXHALL ASTRA CC,ASTRA Estate

19714 **Trag-/Führungsgelenk, Ball Joint, Rotule de suspension**

DAEWOO ESPERO (KLEJ),LANOS (KLAT),LANOS Stufenheck (KLAT),NEXIA (KLETN),NEXIA Stufenheck (KLETN),OPEL KADETT D Caravan (35_, 36_, 45_, 46_),KADETT D (31_-34_, 41_-44_),KADETT E Cabriolet (43B_),KADETT E Caravan (35_, 36_, 45_, 46_),KADETT E CC (33_, 34_, 43_, 44_),KADETT E Combo (38_, 48_),KADETT E Kasten (37_, 47_),KADETT E (39_, 49_),VAUXHALL ASTRA CC,ASTRA Estate,ASTRA Mk II Belmont,ASTRA Mk II CC,ASTRA Mk II Convertible,ASTRA Mk II Estate

19717 **Trag-/Führungsgelenk, Ball Joint, Rotule de suspension**

OPEL ASCONA B (81_, 86_, 87_, 88_),COMMODORE B,COMMODORE B Coupe,MANTA B CC (53_, 55_),MANTA B (58_, 59_),REKORD D,REKORD D Caravan,REKORD D Coupe,VAUXHALL CAVALIER,CAVALIER CC,CAVALIER Coupe

19718 **Spurstangenkopf, Tie Rod End, Rotule de barre de connexion**

DAEWOO ESPERO (KLEJ),LANOS (KLAT),LANOS Stufenheck (KLAT),LEGANZA (KLAV),NEXIA (KLETN),NEXIA Stufenheck (KLETN),NUBIRA Wagon (KLAJ),OPEL ASCONA C CC (84_, 89_),ASCONA C (81_, 86_, 87_, 88_),COMBO (71_),KADETT E Cabriolet (43B_),KADETT E Caravan (35_, 36_, 45_, 46_),KADETT E CC (33_, 34_, 43_, 44_),KADETT E Combo (38_, 48_),KADETT E Kasten (37_, 47_),KADETT E (39_, 49_),VAUXHALL ASTRA Mk II Belmont,ASTRA Mk II CC,ASTRA Mk II Convertible,ASTRA Mk II Estate,CAVALIER Mk II,CAVALIER Mk II CC,CAVALIER Mk II Convertible,CAVALIER Mk II Estate

19719 **Spurstangenkopf, Tie Rod End, Rotule de barre de connexion**

DAEWOO ESPERO (KLEJ),LANOS (KLAT),LANOS Stufenheck (KLAT),LEGANZA (KLAV),NEXIA (KLETN),NEXIA Stufenheck (KLETN),NUBIRA Wagon (KLAJ),OPEL ASCONA C CC (84_, 89_),ASCONA C (81_, 86_, 87_, 88_),COMBO (71_),KADETT E Cabriolet (43B_),KADETT E Caravan (35_, 36_, 45_, 46_),KADETT E CC (33_, 34_, 43_, 44_),KADETT E Combo (38_, 48_),KADETT E Kasten (37_, 47_),KADETT E (39_, 49_),VAUXHALL ASTRA CC,ASTRA Mk II Belmont,ASTRA Mk II CC,ASTRA Mk II Convertible,ASTRA Mk II Estate,CAVALIER Mk II,CAVALIER Mk II CC,CAVALIER Mk II Convertible,CAVALIER Mk II Estate

19721 **Trag-/Führungsgelenk, Ball Joint, Rotule de suspension**

FORD FIESTA I (GFBT)

19722 **Axialgelenk, Spurstange, Inner Tie Rod, Rotule de direction intérieure, barre de connexion**

FORD COURIER Kasten (F3L, F5L),FIESTA III (GFJ),FIESTA Kasten (FVD),KA (RB_),STREET KA

19722/1 **Spurstange, Rod Assembly, Barre de connexion**

FORD COURIER Kasten (F3L, F5L),FIESTA III (GFJ)

19722/2 **Spurstange, Rod Assembly, Barre de connexion**

FORD KA (RB_),STREET KA

19723 **Axialgelenk, Spurstange, Inner Tie Rod, Rotule de direction intérieure, barre de connexion**

FORD ESCORT III Cabriolet (ALD),ESCORT III (GAA),ESCORT III Kombi (AWA),ESCORT IV Cabriolet (ALF),ESCORT IV (GAF, AWF, ABFT),ESCORT IV Kombi (AWF, AVF),ESCORT ´81 Express (AVA),ESCORT ´86 Express (AVF),ORION I (AFD),ORION II (AFF)

19723/1 **Spurstange, Rod Assembly, Barre de connexion**

FORD ESCORT III Cabriolet (ALD),ESCORT III (GAA),ESCORT III Kombi (AWA),ESCORT IV Cabriolet (ALF),ESCORT IV (GAF, AWF, ABFT),ESCORT IV Kombi (AWF, AVF),ESCORT ´81 Express (AVA),ORION I (AFD),ORION II (AFF)

19724 **Axialgelenk, Spurstange, Inner Tie Rod, Rotule de direction intérieure, barre de connexion**

FORD ESCORT V Cabriolet (ALL),ESCORT V (GAL),ESCORT V Kombi (GAL, AVL),ESCORT VI Cabriolet (ALL),ESCORT VI (GAL),ESCORT VI Kombi (GAL),ESCORT VI Stufenheck (GAL),ESCORT ´91 Express (AVL),ESCORT ´95 Express (AVL),ORION III (GAL)

19724/1 **Spurstange, Rod Assembly, Barre de connexion**

FORD ESCORT V Cabriolet (ALL),ESCORT V (GAL),ESCORT V Kombi (GAL, AVL),ESCORT VI Cabriolet (ALL),ESCORT VI (GAL),ESCORT VI Kombi (GAL),ESCORT VI Stufenheck (GAL),ESCORT ´91 Express (AVL),ESCORT ´95 Express (AVL),ORION III (GAL)

19724/2 **Spurstange, Rod Assembly, Barre de connexion**

FORD ESCORT V Cabriolet (ALL),ESCORT V (GAL),ESCORT V Kombi (GAL, AVL),ESCORT VI Cabriolet (ALL),ESCORT VI (GAL),ESCORT VI Kombi (GAL),ESCORT VI Stufenheck (GAL),ESCORT ´91 Express (AVL),ESCORT ´95 Express (AVL),ORION III (GAL)

19725 **Trag-/Führungsgelenk, Ball Joint, Rotule de suspension**

FORD FIESTA II (FBD),FIESTA Kasten (FVD)

19727 **Spurstangenkopf, Tie Rod End, Rotule de barre de connexion**

FORD CAPRI II (GECP),CAPRI III (GECP),COURIER Kasten (F3L, F5L),ESCORT III Cabriolet (ALD),ESCORT III (GAA),ESCORT III Kombi (AWA),ESCORT IV (GAF, AWF, ABFT),ESCORT IV Kombi (AWF, AVF),ESCORT ´81 Express (AVA),ESCORT ´86 Express (AVF),FIESTA I (GFBT),FIESTA II (FBD),FIESTA III (GFJ),FIESTA Kasten (FVD),ORION I (AFD),ORION II (AFF)

19732 **Spurstangenkopf, Tie Rod End, Rotule de barre de connexion**

FORD CONSUL Coupe (GGCL),CONSUL (GGFL),CONSUL Turnier (GGNL),CORTINA,CORTINA Coupe,CORTINA Estate,GRANADA Coupe (GGCL),GRANADA (GGTL, GGFL),GRANADA (GU),GRANADA Kombi (GGNL),GRANADA Kombi (GNU),TAUNUS Coupe (GBCK),TAUNUS (GBFK),TAUNUS (GBTK),TAUNUS (GBTS, GBFS, CBTS),TAUNUS Turnier (GBNK),TAUNUS Turnier (GBNS),TAUNUS 12M Coupe (13G),TAUNUS 12M Turnier (15G),TAUNUS 12M (11G),TAUNUS 12M (12G),TAUNUS 15M Coupe (23G),TAUNUS 15M Turnier (25G),TAUNUS 15M (21G),TAUNUS 15M (22G),TAUNUS 15M (28G),TAUNUS 15M (29G),TAUNUS 17M Coupe (33F),TAUNUS 17M Turnier (35F),TAUNUS 17M Turnier (36F),TAUNUS 17M (31F),TAUNUS 17M (32F),TAUNUS 20M Coupe (43F),TAUNUS 20M Turnier (46F),TAUNUS 20M XL Coupe (53F),TAUNUS 20M XL (51F),TAUNUS 20M XL (52F),TAUNUS 20M (41F),TAUNUS 20M (42F),TAUNUS 26M XL Coupe (53F),TAUNUS 26M XL (52F),TAUNUS ´80 (GBS, GBNS),TAUNUS ´80 Turnier (GBNS)

19735 **Spurstangenkopf, Tie Rod End, Rotule de barre de connexion**

FORD ESCORT V (GAL),ESCORT VI (GAL),ESCORT VII (GAL, AAL, ABL),SCORPIO I (GAE, GGE),SCORPIO I Kombi (GGE),SCORPIO I Stufenheck (GGE),SIERRA (GBG, GB4),SIERRA Kombi (BNC),SIERRA Kombi (BNG),SIERRA Schrägheck (GBC),SIERRA Schrägheck (GBC, GBG)

19736 **Spurstangenkopf, Tie Rod End, Rotule de barre de connexion**

FORD ESCORT V (GAL),ESCORT VI (GAL),ESCORT VII (GAL, AAL, ABL),SCORPIO I (GAE, GGE),SCORPIO I Kombi (GGE),SCORPIO I Stufenheck (GGE),SIERRA (GBG, GB4),SIERRA Kombi (BNC),SIERRA Kombi (BNG),SIERRA Schrägheck (GBC),SIERRA Schrägheck (GBC, GBG)

19737/1 **Lenker, Radaufhängung, Track Control Arm, Bras de liaison, suspension de roue**

FORD SIERRA (GBG, GB4),SIERRA Kombi (BNC),SIERRA Kombi (BNG),SIERRA Schrägheck (GBC),SIERRA Schrägheck (GBC, GBG)

19738/1 **Lenker, Radaufhängung, Track Control Arm, Bras de liaison, suspension de roue**

FORD SIERRA (GBG, GB4),SIERRA Kombi (BNC),SIERRA Kombi (BNG),SIERRA Schrägheck (GBC),SIERRA Schrägheck (GBC, GBG)

19740 **Axialgelenk, Spurstange, Inner Tie Rod, Rotule de direction intérieure, barre de connexion**

FORD TRANSIT Bus (T_ _),TRANSIT Kasten (T_ _),TRANSIT Pritsche/Fahrgestell (T_ _)

19741 **Spurstangenkopf, Tie Rod End, Rotule de barre de connexion**

FORD TRANSIT Bus (T_ _),TRANSIT Kasten (T_ _),TRANSIT Pritsche/Fahrgestell (T_ _),MERCEDES-BENZ G-KLASSE Geländewagen offen (W463),G-KLASSE (W460),G-KLASSE (W461),G-KLASSE (W463),100 Bus (631),100 Kasten (631),100 Pritsche/Fahrgestell (631),PUCH G-MODELL (W 460),G-MODELL (W 461),G-MODELL (W 463)

19742 **Spurstangenkopf, Tie Rod End, Rotule de barre de connexion**

FORD TRANSIT Bus (T_ _),TRANSIT Kasten (T_ _),TRANSIT Pritsche/Fahrgestell (T_ _),MERCEDES-BENZ G-KLASSE Geländewagen offen (W463),G-KLASSE (W460),G-KLASSE (W461),G-KLASSE (W463),100 Bus (631),100 Kasten (631),100 Pritsche/Fahrgestell (631),PUCH G-MODELL (W 460),G-MODELL (W 461),G-MODELL (W 463)

19743/1 **Lenker, Radaufhängung, Track Control Arm, Bras de liaison, suspension de roue**

FORD ESCORT IV Cabriolet (ALF),ESCORT IV (GAF, AWF, ABFT),ESCORT IV Kombi (AWF, AVF),ESCORT ´86 Express (AVF),ORION II (AFF)

19744/1 **Lenker, Radaufhängung, Track Control Arm, Bras de liaison, suspension de roue**

FORD ESCORT IV Cabriolet (ALF),ESCORT IV (GAF, AWF, ABFT),ESCORT IV Kombi (AWF, AVF),ESCORT ´86 Express (AVF),ORION II (AFF)

19745 **Spurstangenkopf, Tie Rod End, Rotule de barre de connexion**

FORD SCORPIO I (GAE, GGE),SCORPIO I Kombi (GGE),SCORPIO I Stufenheck (GGE)

19746/1 **Lenker, Radaufhängung, Track Control Arm, Bras de liaison, suspension de roue**

FORD SCORPIO I (GAE, GGE),SCORPIO I Kombi (GGE),SCORPIO I Stufenheck (GGE),SCORPIO II Kombi (GNR, GGR)

19747/1 **Lenker, Radaufhängung, Track Control Arm, Bras de liaison, suspension de roue**

FORD SCORPIO I (GAE, GGE),SCORPIO I Kombi (GGE),SCORPIO I Stufenheck (GGE),SCORPIO II Kombi (GNR, GGR)

19748 **Spurstangenkopf, Tie Rod End, Rotule de barre de connexion**

FORD TRANSIT Bus (T_ _),TRANSIT Bus (V_ _),TRANSIT Kasten (T_ _),TRANSIT Kasten (V_ _),TRANSIT Pritsche/Fahrgestell (T_ _),TRANSIT Pritsche/Fahrgestell (V_ _)

19749 **Trag-/Führungsgelenk, Ball Joint, Rotule de suspension**

FORD TRANSIT Bus (T_ _),TRANSIT Kasten (T_ _),TRANSIT Pritsche/Fahrgestell (T_ _)

19750 **Spurstangenkopf, Tie Rod End, Rotule de barre de connexion**

FORD TRANSIT Bus (E_ _),TRANSIT Kasten (E_ _),TRANSIT Pritsche/Fahrgestell (E_ _)

19751 **Trag-/Führungsgelenk, Ball Joint, Rotule de suspension**

FORD TRANSIT Bus (E_ _),TRANSIT Kasten (E_ _),TRANSIT Pritsche/Fahrgestell (E_ _)

19752 **Spurstangenkopf, Tie Rod End, Rotule de barre de connexion**

FORD ESCORT CLASSIC (AAL, ABL),ESCORT CLASSIC Turnier (ANL),ESCORT V Cabriolet (ALL),ESCORT V (GAL),ESCORT V Kombi (GAL, AVL),ESCORT VI Cabriolet (ALL),ESCORT VI (GAL),ESCORT VI Kombi (GAL),ESCORT VI Stufenheck (GAL),ESCORT VII Cabriolet (ALL),ESCORT VII (GAL, AAL, ABL),ESCORT VII Kombi (GAL, ANL),ESCORT VII Stufenheck (GAL, AFL),ESCORT ´91 Express (AVL),ESCORT ´95 Express (AVL),ORION III (GAL)

19753 **Spurstangenkopf, Tie Rod End, Rotule de barre de connexion**

FORD ESCORT CLASSIC (AAL, ABL),ESCORT CLASSIC Turnier (ANL),ESCORT V Cabriolet (ALL),ESCORT V (GAL),ESCORT V Kombi (GAL, AVL),ESCORT VI Cabriolet (ALL),ESCORT VI (GAL),ESCORT VI Kombi (GAL),ESCORT VI Stufenheck (GAL),ESCORT VII Cabriolet (ALL),ESCORT VII (GAL, AAL, ABL),ESCORT VII Kombi (GAL, ANL),ESCORT VII Stufenheck (GAL, AFL),ESCORT ´91 Express (AVL),ESCORT ´95 Express (AVL),ORION III (GAL)

19754 **Trag-/Führungsgelenk, Ball Joint, Rotule de suspension**

FORD ESCORT V Cabriolet (ALL),ESCORT V (GAL),ESCORT V Kombi (GAL, AVL),ESCORT VI Cabriolet (ALL),ESCORT VI (GAL),ESCORT VI Kombi (GAL),ESCORT VI Stufenheck (GAL),ESCORT VII Cabriolet (ALL),ESCORT VII (GAL, AAL, ABL),ESCORT VII Kombi (GAL, ANL),ESCORT VII Stufenheck (GAL, AFL),ESCORT ´91 Express (AVL),ESCORT ´95 Express (AVL),FIESTA III (GFJ),FIESTA Kasten (FVD),ORION III (GAL)

19755/1 **Lenker, Radaufhängung, Track Control Arm, Bras de liaison, suspension de roue**

FORD COURIER Kasten (F3L, F5L),FIESTA III (GFJ)

19755/2 **Lenker, Radaufhängung, Track Control Arm, Bras de liaison, suspension de roue**

FORD COURIER Kasten (F3L, F5L),FIESTA III (GFJ),FIESTA Kasten (JV_)

19755/3 **Lenker, Radaufhängung, Track Control Arm, Bras de liaison, suspension de roue**

FORD FIESTA III (GFJ)

19755/4 **Lenker, Radaufhängung, Track Control Arm, Bras de liaison, suspension de roue**

FORD FIESTA III (GFJ)

19755/5 **Lenker, Radaufhängung, Track Control Arm, Bras de liaison, suspension de roue**

FORD FIESTA III (GFJ)

19756/1 **Lenker, Radaufhängung, Track Control Arm, Bras de liaison, suspension de roue**

FORD COURIER Kasten (F3L, F5L),FIESTA III (GFJ)

19756/2 **Lenker, Radaufhängung, Track Control Arm, Bras de liaison, suspension de roue**

FORD COURIER Kasten (F3L, F5L),FIESTA III (GFJ),FIESTA Kasten (JV_)

19756/3 **Lenker, Radaufhängung, Track Control Arm, Bras de liaison, suspension de roue**

FORD FIESTA III (GFJ)

19756/4 **Lenker, Radaufhängung, Track Control Arm, Bras de liaison, suspension de roue**

FORD FIESTA III (GFJ)

19756/5 **Lenker, Radaufhängung, Track Control Arm, Bras de liaison, suspension de roue**

FORD FIESTA III (GFJ)

19757 **Spurstangenkopf, Tie Rod End, Rotule de barre de connexion**

FORD MONDEO I (GBP),MONDEO I Kombi (BNP),MONDEO I Stufenheck (GBP)

19758 **Spurstangenkopf, Tie Rod End, Rotule de barre de connexion**

FORD MONDEO I (GBP),MONDEO I Kombi (BNP),MONDEO I Stufenheck (GBP)

19759 **Trag-/Führungsgelenk, Ball Joint, Rotule de suspension**

FORD MONDEO I (GBP),MONDEO I Kombi (BNP),MONDEO I Stufenheck (GBP),MONDEO II (BAP),MONDEO II Kombi (BNP),MONDEO II Stufenheck (BFP)

19760 **Lenker, Radaufhängung, Track Control Arm, Bras de liaison, suspension de roue**

FORD ESCORT CLASSIC (AAL, ABL),ESCORT CLASSIC Turnier (ANL),ESCORT V Cabriolet (ALL),ESCORT V (GAL),ESCORT V Kombi (GAL, AVL),ESCORT VI Cabriolet (ALL),ESCORT VI (GAL),ESCORT VI Kombi (GAL),ESCORT VI Stufenheck (GAL),ESCORT VII Cabriolet (ALL),ESCORT VII (GAL, AAL, ABL),ESCORT VII Kombi (GAL, ANL),ESCORT VII Stufenheck (GAL, AFL),ESCORT ´91 Express (AVL),ESCORT ´95 Express (AVL),ORION III (GAL)

19761 **Lenker, Radaufhängung, Track Control Arm, Bras de liaison, suspension de roue**

FORD ESCORT CLASSIC (AAL, ABL),ESCORT CLASSIC Turnier (ANL),ESCORT V Cabriolet (ALL),ESCORT V (GAL),ESCORT V Kombi (GAL, AVL),ESCORT VI Cabriolet (ALL),ESCORT VI (GAL),ESCORT VI Kombi (GAL),ESCORT VI Stufenheck (GAL),ESCORT VII Cabriolet (ALL),ESCORT VII (GAL, AAL, ABL),ESCORT VII Kombi (GAL, ANL),ESCORT VII Stufenheck (GAL, AFL),ESCORT ´91 Express (AVL),ESCORT ´95 Express (AVL),ORION III (GAL)

19762 **Axialgelenk, Spurstange, Inner Tie Rod, Rotule de direction intérieure, barre de connexion**

FORD SCORPIO II (GFR, GGR),SCORPIO II Kombi (GNR, GGR)

19763 **Trag-/Führungsgelenk, Ball Joint, Rotule de suspension**

FORD COURIER Kasten (F3L, F5L),COURIER Kasten (J5_, J3_),FIESTA III (GFJ),FIESTA IV (JA_, JB_),FIESTA Kasten (FVD),FIESTA Kasten (JV_),KA (RB_),PUMA (EC_),MAZDA 121 III (JASM, JBSM)

19765 **Trag-/Führungsgelenk, Ball Joint, Rotule de suspension**

FORD COURIER Kasten (F3L, F5L),FIESTA III (GFJ)

19768 **Lenker, Radaufhängung, Track Control Arm, Bras de liaison, suspension de roue**

FORD MONDEO I (GBP),MONDEO I Kombi (BNP),MONDEO I Stufenheck (GBP),MONDEO II (BAP),MONDEO II Kombi (BNP),MONDEO II Stufenheck (BFP)

19769 **Lenker, Radaufhängung, Track Control Arm, Bras de liaison, suspension de roue**

FORD MONDEO I (GBP),MONDEO I Kombi (BNP),MONDEO I Stufenheck (GBP),MONDEO II (BAP),MONDEO II Kombi (BNP),MONDEO II Stufenheck (BFP)

19773HPS **Stange/Strebe, Stabilisator, Link Stabiliser, Entretoise/tige, stabilisateur**

FORD MONDEO III (B5Y),MONDEO III Kombi (BWY),MONDEO III Stufenheck (B4Y),JAGUAR X-TYPE (CF1),X-TYPE Estate

19774 **Stange/Strebe, Stabilisator, Link Stabiliser, Entretoise/tige, stabilisateur**

FORD FIESTA V (JH_, JD_),FUSION (JU_),MAZDA 2 (DY)

19774HPS **Stange/Strebe, Stabilisator, Link Stabiliser, Entretoise/tige, stabilisateur**

FORD FIESTA V (JH_, JD_),FUSION (JU_),MAZDA 2 (DY)

19775 **Stange/Strebe, Stabilisator, Link Stabiliser, Entretoise/tige, stabilisateur**

FORD MONDEO III (B5Y),MONDEO III Stufenheck (B4Y)

19775HPS **Stange/Strebe, Stabilisator, Link Stabiliser, Entretoise/tige, stabilisateur**

FORD MONDEO III (B5Y),MONDEO III Stufenheck (B4Y)

19776HPS **Stange/Strebe, Stabilisator, Link Stabiliser, Entretoise/tige, stabilisateur**

FORD MONDEO III Kombi (BWY)

19777 **Stange/Strebe, Stabilisator, Link Stabiliser, Entretoise/tige, stabilisateur**

FORD MONDEO III (B5Y),MONDEO III Kombi (BWY),MONDEO III Stufenheck (B4Y),JAGUAR X-TYPE (CF1),X-TYPE Estate

19780 **Stange/Strebe, Stabilisator, Link Stabiliser, Entretoise/tige, stabilisateur**

FORD TRANSIT Bus (E_ _),TRANSIT Bus (T_ _),TRANSIT Bus (V_ _),TRANSIT Kasten (E_ _),TRANSIT Kasten (T_ _),TRANSIT Pritsche/Fahrgestell (E_ _),TRANSIT Pritsche/Fahrgestell (T_ _),TRANSIT Pritsche/Fahrgestell (V_ _)

19781 **Stange/Strebe, Stabilisator, Link Stabiliser, Entretoise/tige, stabilisateur**

FORD TRANSIT Bus (E_ _),TRANSIT Bus (T_ _),TRANSIT Bus (V_ _),TRANSIT Kasten (E_ _),TRANSIT Kasten (T_ _),TRANSIT Pritsche/Fahrgestell (E_ _),TRANSIT Pritsche/Fahrgestell (T_ _),TRANSIT Pritsche/Fahrgestell (V_ _)

19782 **Spurstangenkopf, Tie Rod End, Rotule de barre de connexion**

BMW 5 (E39),5 Touring (E39)

19783 **Spurstangenkopf, Tie Rod End, Rotule de barre de connexion**

BMW 5 (E39),5 Touring (E39)

19784 **Spurstange, Rod Assembly, Barre de connexion**

BMW 3 (E46)

19785 **Spurstange, Rod Assembly, Barre de connexion**

BMW 3 (E46)

19786 **Spurstange, Rod Assembly, Barre de connexion**

BMW 5 (E34),5 Touring (E34)

19800 **Spurstangenkopf, Tie Rod End, Rotule de barre de connexion**

OPEL COMBO Kasten/Kombi,COMBO Tour,CORSA A CC (93_, 94_, 98_, 99_),CORSA A Kasten,CORSA A TR (91_, 92_, 96_, 97_),CORSA B Kasten (73_),CORSA B (73_, 78_, 79_),CORSA C (F08, F68),CORSA C Kasten (F08, W5L),TIGRA TwinTop,TIGRA (95_),VAUXHALL COMBO,CORSA,CORSAVAN,NOVA,NOVA CC,NOVAVAN,TIGRA

19801 **Trag-/Führungsgelenk, Ball Joint, Rotule de suspension**

OPEL COMBO (71_),CORSA A CC (93_, 94_, 98_, 99_),CORSA A TR (91_, 92_, 96_, 97_),CORSA B (73_, 78_, 79_),TIGRA (95_)

19802	**Trag-/Führungsgelenk, Ball Joint, Rotule de suspension**
	OPEL ASCONA C CC (84_, 89_),ASCONA C (81_, 86_, 87_, 88_),VAUXHALL CAVALIER Mk II,CAVALIER Mk II CC,CAVALIER Mk II Convertible,CAVALIER Mk II Estate
19803/1	**Spurstange, Rod Assembly, Barre de connexion**
	OPEL OMEGA A Caravan (66_, 67_),OMEGA A (16_, 17_, 19_),SENATOR A (29_),SENATOR B (29_),VAUXHALL CARLTON Mk II,CARLTON Mk II Estate,SENATOR Mk II
19804/1	**Spurstange, Rod Assembly, Barre de connexion**
	OPEL OMEGA A Caravan (66_, 67_),OMEGA A (16_, 17_, 19_),SENATOR A (29_),SENATOR B (29_),VAUXHALL CARLTON Mk II,CARLTON Mk II Estate,SENATOR Mk II
19805	**Axialgelenk, Spurstange, Inner Tie Rod, Rotule de direction intérieure, barre de connexion**
	OPEL CORSA A CC (93_, 94_, 98_, 99_),CORSA A Kasten,CORSA A TR (91_, 92_, 96_, 97_),VAUXHALL CORSA,CORSA Convertible,CORSAVAN,NOVA,NOVA CC,NOVAVAN
19805/1	**Spurstange, Rod Assembly, Barre de connexion**
	OPEL CORSA A CC (93_, 94_, 98_, 99_),CORSA A Kasten,CORSA A TR (91_, 92_, 96_, 97_),VAUXHALL NOVA,NOVA CC
19806	**Lenker, Radaufhängung, Track Control Arm, Bras de liaison, suspension de roue**
	OPEL CORSA A CC (93_, 94_, 98_, 99_),CORSA A Kasten,CORSA A TR (91_, 92_, 96_, 97_),VAUXHALL CORSA,CORSA Convertible,CORSAVAN,NOVA,NOVA CC
19807	**Lenker, Radaufhängung, Track Control Arm, Bras de liaison, suspension de roue**
	OPEL CORSA A CC (93_, 94_, 98_, 99_),CORSA A Kasten,CORSA A TR (91_, 92_, 96_, 97_),VAUXHALL CORSA,CORSA Convertible,CORSAVAN,NOVA,NOVA CC
19808	**Lenker, Radaufhängung, Track Control Arm, Bras de liaison, suspension de roue**
	OPEL CORSA B (73_, 78_, 79_),TIGRA (95_)
19809	**Lenker, Radaufhängung, Track Control Arm, Bras de liaison, suspension de roue**
	OPEL CORSA B (73_, 78_, 79_),TIGRA (95_)
19810	**Axialgelenk, Spurstange, Inner Tie Rod, Rotule de direction intérieure, barre de connexion**
	OPEL COMBO Kasten/Kombi,COMBO Tour,CORSA C (F08, F68),CORSA C Kasten (F08, W5L),VAUXHALL COMBO,CORSA Mk II,CORSAVAN MK II
19811	**Stange/Strebe, Stabilisator, Link Stabiliser, Entretoise/tige, stabilisateur**
	OPEL FRONTERA B (6B_),MONTEREY B
19811HPS	**Stange/Strebe, Stabilisator, Link Stabiliser, Entretoise/tige, stabilisateur**
	ISUZU TROOPER,TROOPER Soft Top,TROOPER Soft Top (UB),TROOPER (UB),OPEL FRONTERA A Sport (5_SUD2),FRONTERA A (5_MWL4),FRONTERA B (6B_),MONTEREY A (UBS_),MONTEREY B
19812	**Spurstange, Rod Assembly, Barre de connexion**
	OPEL OMEGA B Caravan (21_, 22_, 23_),OMEGA B (25_, 26_, 27_),VAUXHALL CARLTON Mk III,CARLTON Mk III Estate,OMEGA,OMEGA Estate
19813	**Spurstange, Rod Assembly, Barre de connexion**
	OPEL OMEGA B Caravan (21_, 22_, 23_),OMEGA B (25_, 26_, 27_),VAUXHALL CARLTON Mk III,CARLTON Mk III Estate,OMEGA,OMEGA Estate
19816	**Trag-/Führungsgelenk, Ball Joint, Rotule de suspension**
	OPEL MONZA A (22_),REKORD E Caravan (61_, 66_, 67_),REKORD E (17_-19_, 11_, 14_, 16_),SENATOR A (29_),VAUXHALL CARLTON Mk II,CARLTON Mk II Estate,ROYALE,ROYALE Coupe,SENATOR
19817	**Stange/Strebe, Stabilisator, Link Stabiliser, Entretoise/tige, stabilisateur**
	MERCEDES-BENZ CABRIOLET (A124),C-KLASSE Kombi (S202),C-KLASSE (W202),CLK Cabriolet (A208),CLK (C208),COUPE (C124),E-KLASSE Cabriolet (A124),E-KLASSE Coupe (C124),E-KLASSE Kombi (S124),E-KLASSE Kombi (S210),E-KLASSE (W124),E-KLASSE (W210),KOMBI Kombi (S124),SL (R129),SLK (R170),Stufenheck (W124),190 (W201)
19818	**Stange/Strebe, Stabilisator, Link Stabiliser, Entretoise/tige, stabilisateur**
	MERCEDES-BENZ CABRIOLET (A124),C-KLASSE Kombi (S202),C-KLASSE (W202),CLK Cabriolet (A208),CLK (C208),COUPE (C124),E-KLASSE Cabriolet (A124),E-KLASSE Coupe (C124),E-KLASSE Kombi (S124),E-KLASSE Kombi (S210),E-KLASSE (W124),E-KLASSE (W210),KOMBI Kombi (S124),SL (R129),SLK (R170),Stufenheck (W124),190 (W201)
19819	**Stange/Strebe, Stabilisator, Link Stabiliser, Entretoise/tige, stabilisateur**
	MERCEDES-BENZ CABRIOLET (A124),C-KLASSE Kombi (S202),C-KLASSE (W202),CLK Cabriolet (A208),CLK (C208),COUPE (C124),E-KLASSE Cabriolet (A124),E-KLASSE Coupe (C124),E-KLASSE Kombi (S124),E-KLASSE Kombi (S210),E-KLASSE (W124),E-KLASSE (W210),KOMBI Kombi (S124),SL (R129),SLK (R170),Stufenheck (W124),190 (W201)
19820	**Stange/Strebe, Stabilisator, Link Stabiliser, Entretoise/tige, stabilisateur**
	MERCEDES-BENZ CABRIOLET (A124),C-KLASSE Kombi (S202),C-KLASSE (W202),CLK Cabriolet (A208),CLK (C208),COUPE (C124),E-KLASSE Cabriolet (A124),E-KLASSE Coupe (C124),E-KLASSE Kombi (S124),E-KLASSE Kombi (S210),E-KLASSE (W124),E-KLASSE (W210),KOMBI Kombi (S124),SL (R129),SLK (R170),Stufenheck (W124),190 (W201)
19821	**Spurstange, Rod Assembly, Barre de connexion**
	MERCEDES-BENZ 190 (W201)
19822	**Spurstange, Rod Assembly, Barre de connexion**
	MERCEDES-BENZ 190 (W201)
19823	**Spurstangenkopf, Tie Rod End, Rotule de barre de connexion**
	MERCEDES-BENZ 190 (W201)
19824	**Spurstangenkopf, Tie Rod End, Rotule de barre de connexion**
	MERCEDES-BENZ CABRIOLET (A124),COUPE (C124),E-KLASSE Cabriolet (A124),E-KLASSE Coupe (C124),E-KLASSE Kombi (S124),E-KLASSE (W124),KOMBI Kombi (S124),Stufenheck (W124),190 (W201)
19825	**Spurstange, Rod Assembly, Barre de connexion**
	MERCEDES-BENZ 190 (W201)
19826	**Spurstangenkopf, Tie Rod End, Rotule de barre de connexion**
	MERCEDES-BENZ T1 Bus (601),T1 Kasten (601),T1 Pritsche/Fahrgestell (601),190 (W201)

19827 **Spurstangenkopf, Tie Rod End, Rotule de barre de connexion**

MERCEDES-BENZ CABRIOLET (A124),COUPE (C124),E-KLASSE Cabriolet (A124),E-KLASSE Coupe (C124),E-KLASSE Kombi (S124),E-KLASSE (W124),KOMBI Kombi (S124),Stufenheck (W124),190 (W201)

19828 **Trag-/Führungsgelenk, Ball Joint, Rotule de suspension**

MERCEDES-BENZ CABRIOLET (A124),COUPE (C124),E-KLASSE Cabriolet (A124),E-KLASSE Coupe (C124),E-KLASSE Kombi (S124),E-KLASSE (W124),KOMBI Kombi (S124),SL (R107),SL (R129),Stufenheck (W124),190 (W201)

19829 **Spurstange, Rod Assembly, Barre de connexion**

MERCEDES-BENZ COUPE (C123),KOMBI Kombi (S123),S-KLASSE (W116),Stufenheck (W123)

19830/1 **Spurstange, Rod Assembly, Barre de connexion**

MERCEDES-BENZ CABRIOLET (A124),COUPE (C124),E-KLASSE Cabriolet (A124),E-KLASSE Coupe (C124),E-KLASSE Kombi (S124),E-KLASSE (W124),KOMBI Kombi (S124),Stufenheck (W124)

19831/1 **Spurstange, Rod Assembly, Barre de connexion**

MERCEDES-BENZ CABRIOLET (A124),COUPE (C124),E-KLASSE Cabriolet (A124),E-KLASSE Coupe (C124),E-KLASSE Kombi (S124),E-KLASSE (W124),KOMBI Kombi (S124),Stufenheck (W124)

19832 **Stange/Strebe, Radaufhängung, Link, wheel suspension, Biellette de barre stabilisatrice**

MERCEDES-BENZ CABRIOLET (A124),C-KLASSE Kombi (S202),C-KLASSE (W202),CLK Cabriolet (A208),CLK (C208),COUPE (C124),E-KLASSE Cabriolet (A124),E-KLASSE Coupe (C124),E-KLASSE Kombi (S124),E-KLASSE Kombi (S210),E-KLASSE (W124),E-KLASSE (W210),KOMBI Kombi (S124),SL (R129),SLK (R170),Stufenheck (W124),190 (W201)

19833 **Spurstangenkopf, Tie Rod End, Rotule de barre de connexion**

MERCEDES-BENZ S-KLASSE Coupe (C140),S-KLASSE (W140)

19834 **Spurstangenkopf, Tie Rod End, Rotule de barre de connexion**

MERCEDES-BENZ S-KLASSE Coupe (C140),S-KLASSE (W140)

19836 **Spurstangenkopf, Tie Rod End, Rotule de barre de connexion**

MERCEDES-BENZ CABRIOLET (W111),COUPE (C123),COUPE (W111),HECKFLOSSE (W110),HECKFLOSSE (W111),KOMBI Kombi (S123),PAGODE (W113),PONTON (W120),PONTON (W121),PONTON (W128),PONTON (W180),S-KLASSE Coupe (C126),S-KLASSE Stufenheck (W108, W109),S-KLASSE (W116),S-KLASSE (W126),SL Coupe (C107),SL (R107),SL (W121),Stufenheck (W123),/8 Coupe (W114),/8 (W114),/8 (W115)

19837 **Spurstange, Rod Assembly, Barre de connexion**

MERCEDES-BENZ S-KLASSE Coupe (C140),S-KLASSE (W140)

19838 **Spurstange, Rod Assembly, Barre de connexion**

MERCEDES-BENZ COUPE (C123),KOMBI Kombi (S123),S-KLASSE Coupe (C126),S-KLASSE (W116),S-KLASSE (W126),Stufenheck (W123)

19839 **Stange/Strebe, Stabilisator, Link Stabiliser, Entretoise/tige, stabilisateur**

MERCEDES-BENZ CABRIOLET (A124),C-KLASSE Kombi (S202),C-KLASSE (W202),CLK Cabriolet (A208),CLK (C208),COUPE (C124),E-KLASSE Cabriolet (A124),E-KLASSE Coupe (C124),E-KLASSE Kombi (S124),E-KLASSE Kombi (S210),E-KLASSE (W124),E-KLASSE (W210),KOMBI Kombi (S124),SL (R129),SLK (R170),Stufenheck (W124),190 (W201)

19840 **Spurstangenkopf, Tie Rod End, Rotule de barre de connexion**

MERCEDES-BENZ COUPE (C123),KOMBI Kombi (S123),S-KLASSE Coupe (C126),S-KLASSE (W116),S-KLASSE (W126),Stufenheck (W123)

19841 **Spurstangenkopf, Tie Rod End, Rotule de barre de connexion**

MERCEDES-BENZ COUPE (C123),KOMBI Kombi (S123),S-KLASSE Coupe (C126),S-KLASSE (W116),S-KLASSE (W126),Stufenheck (W123)

19842 **Lenker, Radaufhängung, Track Control Arm, Bras de liaison, suspension de roue**

MERCEDES-BENZ COUPE (C123),KOMBI Kombi (S123),S-KLASSE (W116),Stufenheck (W123)

19843 **Lenker, Radaufhängung, Track Control Arm, Bras de liaison, suspension de roue**

MERCEDES-BENZ COUPE (C123),KOMBI Kombi (S123),S-KLASSE (W116),Stufenheck (W123)

19844 **Trag-/Führungsgelenk, Ball Joint, Rotule de suspension**

MERCEDES-BENZ COUPE (C123),KOMBI Kombi (S123),S-KLASSE Coupe (C126),S-KLASSE (W116),S-KLASSE (W126),Stufenheck (W123)

19845 **Spurstange, Rod Assembly, Barre de connexion**

MERCEDES-BENZ CABRIOLET (A124),COUPE (C124),E-KLASSE Cabriolet (A124),E-KLASSE Coupe (C124),E-KLASSE Kombi (S124),E-KLASSE (W124),KOMBI Kombi (S124),Stufenheck (W124)

19846 **Spurstangenkopf, Tie Rod End, Rotule de barre de connexion**

MERCEDES-BENZ CABRIOLET (A124),COUPE (C123),COUPE (C124),E-KLASSE Cabriolet (A124),E-KLASSE Coupe (C124),E-KLASSE Kombi (S124),E-KLASSE (W124),KOMBI Kombi (S123),KOMBI Kombi (S124),S-KLASSE Coupe (C126),S-KLASSE (W116),S-KLASSE (W126),Stufenheck (W123),Stufenheck (W124)

19847 **Spurstangenkopf, Tie Rod End, Rotule de barre de connexion**

MERCEDES-BENZ CABRIOLET (A124),COUPE (C124),E-KLASSE Cabriolet (A124),E-KLASSE Coupe (C124),E-KLASSE Kombi (S124),E-KLASSE (W124),KOMBI Kombi (S124),Stufenheck (W124)

19848 **Spurstangenkopf, Tie Rod End, Rotule de barre de connexion**

MERCEDES-BENZ CABRIOLET (A124),COUPE (C124),E-KLASSE Cabriolet (A124),E-KLASSE Coupe (C124),E-KLASSE Kombi (S124),E-KLASSE (W124),KOMBI Kombi (S124),Stufenheck (W124)

19849 **Spurstangenkopf, Tie Rod End, Rotule de barre de connexion**

MERCEDES-BENZ CABRIOLET (A124),COUPE (C124),E-KLASSE Cabriolet (A124),E-KLASSE Coupe (C124),E-KLASSE Kombi (S124),E-KLASSE (W124),KOMBI Kombi (S124),Stufenheck (W124)

19850 **Spurstangenkopf, Tie Rod End, Rotule de barre de connexion**

AUDI COUPE (81, 85),COUPE (89, 8B),QUATTRO (85),50 (86),80 (80, 82, B1),80 (81, 85, B2),90 (81, 85, B2),VW DERBY (86),DERBY (86C, 80),PASSAT Stufenheck (32B),PASSAT Variant (32B),PASSAT Variant (33),PASSAT (32),PASSAT (32B),POLO CLASSIC (86C, 80),POLO Coupe (86C, 80),POLO Kasten (6NF),POLO Kasten (86CF),POLO (86),POLO (86C, 80),SANTANA (32B)

19851 **Trag-/Führungsgelenk, Ball Joint, Rotule de suspension**

VW LT 28-35 I Bus (281-363),LT 28-35 I Kasten (281-363),LT 28-35 I Pritsche/Fahrgestell (281-363),LT 40-55 I Kasten (291-512),LT 40-55 I Pritsche/Fahrgestell (293-909)

19852 **Trag-/Führungsgelenk, Ball Joint, Rotule de suspension**

VW LT 28-35 I Bus (281-363),LT 28-35 I Kasten (281-363),LT 28-35 I Pritsche/Fahrgestell (281-363),LT 40-55 I Kasten (291-512),LT 40-55 I Pritsche/Fahrgestell (293-909)

19853HPS **Stange/Strebe, Stabilisator, Link Stabiliser, Entretoise/tige, stabilisateur**

SEAT TOLEDO I (1L),VW GOLF III (1H1),VENTO (1H2)

19854 **Lenker, Radaufhängung, Track Control Arm, Bras de liaison, suspension de roue**

VW DERBY (86),DERBY (86C, 80),POLO CLASSIC (86C, 80),POLO Coupe (86C, 80),POLO Kasten (86CF),POLO (86),POLO (86C, 80)

19855/1 **Lenker, Radaufhängung, Track Control Arm, Bras de liaison, suspension de roue**

VW GOLF II (19E, 1G1),JETTA II (19E, 1G2)

19855/2 **Lenker, Radaufhängung, Track Control Arm, Bras de liaison, suspension de roue**

VW GOLF II (19E, 1G1),JETTA II (19E, 1G2)

19855/7 **Lenker, Radaufhängung, Track Control Arm, Bras de liaison, suspension de roue**

VW GOLF II (19E, 1G1),JETTA II (19E, 1G2)

19855/8 **Lenker, Radaufhängung, Track Control Arm, Bras de liaison, suspension de roue**

VW GOLF II (19E, 1G1),JETTA II (19E, 1G2)

19856 **Trag-/Führungsgelenk, Ball Joint, Rotule de suspension**

AUDI 80 (80, 82, B1),VW PASSAT Variant (33),PASSAT (32)

19857 **Trag-/Führungsgelenk, Ball Joint, Rotule de suspension**

AUDI COUPE (81, 85),COUPE (89, 8B),80 (81, 85, B2),90 (81, 85, B2),VW PASSAT Stufenheck (32B),PASSAT Variant (32B),PASSAT Variant (33),PASSAT (32),PASSAT (32B),SANTANA (32B)

19858 **Lenker, Radaufhängung, Track Control Arm, Bras de liaison, suspension de roue**

SEAT CORDOBA Schrägheck (6K2),CORDOBA Vario (6K5),CORDOBA (6K2/C2),IBIZA II (6K1),IBIZA III (6K1),INCA (6K9),TOLEDO I (1L),VW CADDY II Kasten (9K9A),CADDY II Kombi (9K9B),CORRADO (53I),GOLF II (19E, 1G1),JETTA II (19E, 1G2),POLO CLASSIC (6KV2),POLO Variant (6KV5)

19858/1 **Lenker, Radaufhängung, Track Control Arm, Bras de liaison, suspension de roue**

SEAT CORDOBA Schrägheck (6K2),CORDOBA Vario (6K5),CORDOBA (6K2/C2),IBIZA II (6K1),IBIZA III (6K1),INCA (6K9),TOLEDO I (1L),VW CADDY II Kasten (9K9A),CADDY II Kombi (9K9B),CORRADO (53I),GOLF II (19E, 1G1),JETTA II (19E, 1G2),POLO CLASSIC (6KV2),POLO Variant (6KV5)

19858/2 **Lenker, Radaufhängung, Track Control Arm, Bras de liaison, suspension de roue**

SEAT CORDOBA Schrägheck (6K2),CORDOBA Vario (6K5),CORDOBA (6K2/C2),IBIZA II (6K1),IBIZA III (6K1),INCA (6K9),TOLEDO I (1L),VW CADDY II Kasten (9K9A),CADDY II Kombi (9K9B),CORRADO (53I),GOLF II (19E, 1G1),JETTA II (19E, 1G2),POLO CLASSIC (6KV2),POLO Variant (6KV5)

19858/7 **Lenker, Radaufhängung, Track Control Arm, Bras de liaison, suspension de roue**

SEAT CORDOBA Schrägheck (6K2),CORDOBA Vario (6K5),CORDOBA (6K2/C2),IBIZA II (6K1),IBIZA III (6K1),INCA (6K9),TOLEDO I (1L),VW CORRADO (53I),GOLF II (19E, 1G1),JETTA II (19E, 1G2),POLO CLASSIC (6KV2),POLO Variant (6KV5)

19858/8 **Lenker, Radaufhängung, Track Control Arm, Bras de liaison, suspension de roue**

SEAT CORDOBA Schrägheck (6K2),CORDOBA Vario (6K5),CORDOBA (6K2/C2),IBIZA II (6K1),IBIZA III (6K1),INCA (6K9),TOLEDO I (1L),VW CORRADO (53I),GOLF II (19E, 1G1),JETTA II (19E, 1G2),POLO CLASSIC (6KV2),POLO Variant (6KV5)

19859 **Spurstangenkopf, Tie Rod End, Rotule de barre de connexion**

VW TRANSPORTER T4 Bus (70XB, 70XC, 7DB, 7DW),TRANSPORTER T4 Kasten (70XA),TRANSPORTER T4 Pritsche/Fahrgestell (70XD)

19860 **Spurstange, Rod Assembly, Barre de connexion**

SEAT CORDOBA Vario (6K5),CORDOBA (6K2/C2),IBIZA II (6K1),TOLEDO I (1L),VW SCIROCCO (53B)

19861 **Spurstange, Rod Assembly, Barre de connexion**

SEAT CORDOBA Vario (6K5),CORDOBA (6K2/C2),IBIZA II (6K1),TOLEDO I (1L),VW CORRADO (53I),SCIROCCO (53B)

19862 **Spurstange, Rod Assembly, Barre de connexion**

VW GOLF III Variant (1H5),GOLF III (1H1),VENTO (1H2)

19863 **Spurstange, Rod Assembly, Barre de connexion**

VW GOLF III Variant (1H5),GOLF III (1H1),VENTO (1H2)

19864 **Spurstange, Rod Assembly, Barre de connexion**

VW GOLF III Cabriolet (1E7),GOLF III Variant (1H5),GOLF III (1H1),VENTO (1H2)

19865 **Spurstange, Rod Assembly, Barre de connexion**

VW GOLF III Cabriolet (1E7),GOLF III Variant (1H5),GOLF III (1H1),VENTO (1H2)

19866 **Spurstangenkopf, Tie Rod End, Rotule de barre de connexion**

VW TRANSPORTER T4 Bus (70XB, 70XC, 7DB, 7DW),TRANSPORTER T4 Kasten (70XA),TRANSPORTER T4 Pritsche/Fahrgestell (70XD)

19867 **Spurstangenkopf, Tie Rod End, Rotule de barre de connexion**

VW TRANSPORTER T4 Bus (70XB, 70XC, 7DB, 7DW),TRANSPORTER T4 Kasten (70XA),TRANSPORTER T4 Pritsche/Fahrgestell (70XD)

19868 **Trag-/Führungsgelenk, Ball Joint, Rotule de suspension**

VW TRANSPORTER T4 Bus (70XB, 70XC, 7DB, 7DW),TRANSPORTER T4 Kasten (70XA),TRANSPORTER T4 Pritsche/Fahrgestell (70XD)

19869 **Trag-/Führungsgelenk, Ball Joint, Rotule de suspension**

VW TRANSPORTER T4 Bus (70XB, 70XC, 7DB, 7DW),TRANSPORTER T4 Kasten (70XA),TRANSPORTER T4 Pritsche/Fahrgestell (70XD)

19870 **Lenker, Radaufhängung, Track Control Arm, Bras de liaison, suspension de roue**

VW GOLF III Cabriolet (1E7),GOLF III Variant (1H5),GOLF III (1H1),GOLF IV Cabriolet (1E7),VENTO (1H2)

19870/1 **Lenker, Radaufhängung, Track Control Arm, Bras de liaison, suspension de roue**

VW GOLF III Cabriolet (1E7),GOLF III Variant (1H5),GOLF III (1H1),GOLF IV Cabriolet (1E7),VENTO (1H2)

19870/2 **Lenker, Radaufhängung, Track Control Arm, Bras de liaison, suspension de roue**

VW GOLF III Cabriolet (1E7),GOLF III Variant (1H5),GOLF III (1H1),GOLF IV Cabriolet (1E7),VENTO (1H2)

19870/7 **Lenker, Radaufhängung, Track Control Arm, Bras de liaison, suspension de roue**

VW GOLF III Cabriolet (1E7),GOLF III Variant (1H5),GOLF III (1H1),GOLF IV Cabriolet (1E7),VENTO (1H2)

19870/8 **Lenker, Radaufhängung, Track Control Arm, Bras de liaison, suspension de roue**

VW GOLF III Cabriolet (1E7),GOLF III Variant (1H5),GOLF III (1H1),GOLF IV Cabriolet (1E7),VENTO (1H2)

19871 **Spurstange, Rod Assembly, Barre de connexion**

VW PASSAT Variant (3A5, 35I),PASSAT (3A2, 35I)

19872 **Spurstange, Rod Assembly, Barre de connexion**

VW PASSAT Variant (3A5, 35I),PASSAT (3A2, 35I)

19873 **Spurstangenkopf, Tie Rod End, Rotule de barre de connexion**

VW TRANSPORTER T4 Bus (70XB, 70XC, 7DB, 7DW),TRANSPORTER T4 Kasten (70XA),TRANSPORTER T4 Pritsche/Fahrgestell (70XD)

19874 **Spurstangenkopf, Tie Rod End, Rotule de barre de connexion**

PORSCHE 924,VOLVO 340-360 Stufenheck (344),340-360 (343, 345),VW CADDY I (14),GOLF I Cabriolet (155),GOLF I (17),JETTA I (16),SCIROCCO (53),SCIROCCO (53B),TRANSPORTER T3 Bus,TRANSPORTER T3 Kasten,TRANSPORTER T3 Pritsche/Fahrgestell

19875 **Trag-/Führungsgelenk, Ball Joint, Rotule de suspension**

PORSCHE 924,VW GOLF I (17),SCIROCCO (53),SCIROCCO (53B)

19876 **Trag-/Führungsgelenk, Ball Joint, Rotule de suspension**

VW CADDY I (14),GOLF I Cabriolet (155),GOLF I (17),JETTA I (16),SCIROCCO (53),SCIROCCO (53B)

19877 **Spurstangenkopf, Tie Rod End, Rotule de barre de connexion**

SEAT CORDOBA Schrägheck (6K2),CORDOBA Vario (6K5),CORDOBA (6K2/C2),IBIZA II (6K1),IBIZA III (6K1),TOLEDO I (1L),VW CORRADO (53I),GOLF II (19E, 1G1),GOLF III Cabriolet (1E7),GOLF III Variant (1H5),GOLF III (1H1),GOLF IV Cabriolet (1E7),JETTA II (19E, 1G2),PASSAT Variant (3A5, 35I),PASSAT (3A2, 35I),POLO CLASSIC (86C, 80),VENTO (1H2)

19878 **Spurstangenkopf, Tie Rod End, Rotule de barre de connexion**

SEAT CORDOBA Schrägheck (6K2),CORDOBA Vario (6K5),CORDOBA (6K2/C2),IBIZA II (6K1),IBIZA III (6K1),TOLEDO I (1L),VW CORRADO (53I),GOLF II (19E, 1G1),GOLF III Cabriolet (1E7),GOLF III Variant (1H5),GOLF III (1H1),GOLF IV Cabriolet (1E7),JETTA II (19E, 1G2),PASSAT Variant (3A5, 35I),PASSAT (3A2, 35I),VENTO (1H2)

19879 **Trag-/Führungsgelenk, Ball Joint, Rotule de suspension**

VW GOLF II (19E, 1G1),JETTA II (19E, 1G2)

19879/1 **Trag-/Führungsgelenk, Ball Joint, Rotule de suspension**

VW GOLF II (19E, 1G1),JETTA II (19E, 1G2)

19880 **Spurstangenkopf, Tie Rod End, Rotule de barre de connexion**

VW TRANSPORTER T4 Bus (70XB, 70XC, 7DB, 7DW),TRANSPORTER T4 Kasten (70XA),TRANSPORTER T4 Pritsche/Fahrgestell (70XD)

19881 **Trag-/Führungsgelenk, Ball Joint, Rotule de suspension**

VW TRANSPORTER T2 Bus,TRANSPORTER T2 Kasten,TRANSPORTER T2 Pritsche/Fahrgestell

19882 **Spurstangenkopf, Tie Rod End, Rotule de barre de connexion**

VW TRANSPORTER T4 Bus (70XB, 70XC, 7DB, 7DW),TRANSPORTER T4 Kasten (70XA),TRANSPORTER T4 Pritsche/Fahrgestell (70XD)

19883 **Trag-/Führungsgelenk, Ball Joint, Rotule de suspension**

VW TRANSPORTER T3 Bus,TRANSPORTER T3 Kasten,TRANSPORTER T3 Pritsche/Fahrgestell

19884 **Trag-/Führungsgelenk, Ball Joint, Rotule de suspension**

VW TRANSPORTER T3 Bus,TRANSPORTER T3 Kasten,TRANSPORTER T3 Pritsche/Fahrgestell

19885 **Spurstangenkopf, Tie Rod End, Rotule de barre de connexion**

SEAT AROSA (6H),VW LUPO (6X1, 6E1),POLO Kasten (6NF),POLO (6N1),POLO (6N2)

19886 **Spurstangenkopf, Tie Rod End, Rotule de barre de connexion**

SEAT AROSA (6H),VW LUPO (6X1, 6E1),POLO Kasten (6NF),POLO (6N1),POLO (6N2)

19887 **Axialgelenk, Spurstange, Inner Tie Rod, Rotule de direction intérieure, barre de connexion**

VW TRANSPORTER T3 Bus,TRANSPORTER T3 Kasten,TRANSPORTER T3 Pritsche/Fahrgestell

19888 **Spurstange, Rod Assembly, Barre de connexion**

SEAT CORDOBA (6K2/C2),IBIZA II (6K1),IBIZA III (6K1),TOLEDO I (1L),VW GOLF II (19E, 1G1),JETTA II (19E, 1G2)

19889 **Trag-/Führungsgelenk, Ball Joint, Rotule de suspension**

SEAT CORDOBA Schrägheck (6K2),CORDOBA Vario (6K5),CORDOBA (6K2/C2),IBIZA II (6K1),IBIZA III (6K1),INCA (6K9),TOLEDO I (1L),VW CADDY II Kasten (9K9A),CADDY II Kombi (9K9B),CORRADO (53I),GOLF II (19E, 1G1),GOLF III Cabriolet (1E7),GOLF III Variant (1H5),GOLF III (1H1),GOLF IV Cabriolet (1E7),JETTA II (19E, 1G2),PASSAT Variant (3A5, 35I),PASSAT (3A2, 35I),POLO CLASSIC (6KV2),POLO Variant (6KV5),VENTO (1H2)

19889/1 **Trag-/Führungsgelenk, Ball Joint, Rotule de suspension**

SEAT CORDOBA Schrägheck (6K2),CORDOBA Vario (6K5),CORDOBA (6K2/C2),IBIZA II (6K1),IBIZA III (6K1),INCA (6K9),TOLEDO I (1L),VW CADDY II Kasten (9K9A),CADDY II Kombi (9K9B),CORRADO (53I),GOLF II (19E, 1G1),GOLF III Cabriolet (1E7),GOLF III Variant (1H5),GOLF III (1H1),GOLF IV Cabriolet (1E7),JETTA II (19E, 1G2),PASSAT Variant (3A5, 35I),PASSAT (3A2, 35I),POLO CLASSIC (6KV2),POLO Variant (6KV5),VENTO (1H2)

19890 **Spurstangenkopf, Tie Rod End, Rotule de barre de connexion**

AUDI CABRIOLET (8G7, B4),COUPE (81, 85),COUPE (89, 8B),80 Avant (8C, B4),80 (8C, B4),80 (81, 85, B2),80 (89, 89Q, 8A, B3),90 (81, 85, B2),90 (89, 89Q, 8A, B3),VW PASSAT Stufenheck (32B),PASSAT Variant (32B),PASSAT (32B),SANTANA (32B)

19891 **Spurstange, Rod Assembly, Barre de connexion**

VW CADDY I (14),GOLF I Cabriolet (155),GOLF I (17),JETTA I (16),SCIROCCO (53),SCIROCCO (53B)

19891/1	**Axialgelenk, Spurstange, Inner Tie Rod, Rotule de direction intérieure, barre de connexion**
	VW CADDY I (14),GOLF I Cabriolet (155),GOLF I (17),JETTA I (16),SCIROCCO (53),SCIROCCO (53B)
19892	**Spurstange, Rod Assembly, Barre de connexion**
	SEAT CORDOBA (6K2/C2),IBIZA II (6K1),IBIZA III (6K1),TOLEDO I (1L),VW GOLF II (19E, 1G1),GOLF III Variant (1H5),JETTA II (19E, 1G2)
19893	**Trag-/Führungsgelenk, Ball Joint, Rotule de suspension**
	AUDI COUPE (81, 85),80 (81, 85, B2),80 (89, 89Q, 8A, B3),90 (81, 85, B2),90 (89, 89Q, 8A, B3)
19894	**Trag-/Führungsgelenk, Ball Joint, Rotule de suspension**
	AUDI COUPE (81, 85),80 (81, 85, B2),80 (89, 89Q, 8A, B3),90 (81, 85, B2),90 (89, 89Q, 8A, B3),VW PASSAT Stufenheck (32B),PASSAT Variant (32B),PASSAT (32B),SANTANA (32B)
19895	**Trag-/Führungsgelenk, Ball Joint, Rotule de suspension**
	SEAT AROSA (6H),VW LUPO (6X1, 6E1),POLO (6N1),POLO (6N2)
19895/1	**Trag-/Führungsgelenk, Ball Joint, Rotule de suspension**
	SEAT AROSA (6H),VW LUPO (6X1, 6E1),POLO Kasten (6NF),POLO (6N1),POLO (6N2)
19895/9	**Sicherungsblech, Trag-/Führungsgelenk, Securing Plate, ball joint, Plaque d'arrêt, rotule de suspension**
	SEAT AROSA (6H),VW LUPO (6X1, 6E1),POLO (6N1),POLO (6N2),POLO (9N_)
19896	**Trag-/Führungsgelenk, Ball Joint, Rotule de suspension**
	SEAT AROSA (6H),VW LUPO (6X1, 6E1),POLO (6N1),POLO (6N2)
19896/1	**Trag-/Führungsgelenk, Ball Joint, Rotule de suspension**
	SEAT AROSA (6H),VW LUPO (6X1, 6E1),POLO Kasten (6NF),POLO (6N1),POLO (6N2)
19897	**Trag-/Führungsgelenk, Ball Joint, Rotule de suspension**
	AUDI 80 (89, 89Q, 8A, B3)
19898	**Trag-/Führungsgelenk, Ball Joint, Rotule de suspension**
	AUDI 80 (89, 89Q, 8A, B3)
19899	**Spurstange, Rod Assembly, Barre de connexion**
	VW DERBY (86C, 80),POLO CLASSIC (86C, 80),POLO Coupe (86C, 80),POLO Kasten (86CF),POLO (86C, 80)
19901	**Trag-/Führungsgelenk, Ball Joint, Rotule de suspension**
	VOLVO 240 Kombi (P245),240 (P242, P244),260 Coupe (P262),260 Kombi (P265),260 (P262, P264)
19902	**Trag-/Führungsgelenk, Ball Joint, Rotule de suspension**
	VOLVO 240 Kombi (P245),240 (P242, P244),260 Coupe (P262),260 Kombi (P265),260 (P262, P264)
19903	**Stange/Strebe, Stabilisator, Link Stabiliser, Entretoise/tige, stabilisateur**
	VOLVO 440 K (445),460 L (464),480 E
19906	**Spurstangenkopf, Tie Rod End, Rotule de barre de connexion**
	VOLVO S90,V90 Kombi,240 Kombi (P245),240 (P242, P244),260 Coupe (P262),260 Kombi (P265),260 (P262, P264),740 Kombi (745),740 (744),760 Kombi (704, 765),760 (704, 764),780,940 II Kombi (945),940 II (944),940 Kombi (945),940 (944),960 II Kombi (965),960 II (964),960 Kombi (965),960 (964)
19907	**Trag-/Führungsgelenk, Ball Joint, Rotule de suspension**
	VOLVO S90,V90 Kombi,740 Kombi (745),740 (744),760 Kombi (704, 765),760 (704, 764),780,940 II Kombi (945),940 II (944),940 Kombi (945),940 (944),960 II Kombi (965),960 II (964),960 Kombi (965),960 (964)
19908	**Spurstangenkopf, Tie Rod End, Rotule de barre de connexion**
	VOLVO 440 K (445),460 L (464),480 E
19909	**Trag-/Führungsgelenk, Ball Joint, Rotule de suspension**
	VOLVO 440 K (445),460 L (464),480 E
19910	**Spurstangenkopf, Tie Rod End, Rotule de barre de connexion**
	VOLVO C70 I Cabriolet,C70 I Coupe,S60,S70 (P80_),S80 (TS, XY),S90,V70 I Kombi (P80_),V70 II Kombi (P80_),V90 Kombi,XC70 CROSS COUNTRY,850 Kombi (LW),850 (LS),940 II Kombi (945),940 II (944),940 Kombi (945),940 (944),960 II Kombi (965),960 II (964),960 Kombi (965),960 (964)
19911	**Spurstangenkopf, Tie Rod End, Rotule de barre de connexion**
	VOLVO C70 I Cabriolet,C70 I Coupe,S60,S70 (P80_),S80 (TS, XY),S90,V70 I Kombi (P80_),V70 II Kombi (P80_),V90 Kombi,XC70 CROSS COUNTRY,850 Kombi (LW),850 (LS),940 II Kombi (945),940 II (944),940 Kombi (945),940 (944),960 II Kombi (965),960 II (964),960 Kombi (965),960 (964)
19912	**Trag-/Führungsgelenk, Ball Joint, Rotule de suspension**
	VOLVO 850 Kombi (LW),850 (LS)
19913	**Stange/Strebe, Stabilisator, Link Stabiliser, Entretoise/tige, stabilisateur**
	VOLVO S90,V90 Kombi,740 Kombi (745),740 (744),760 Kombi (704, 765),760 (704, 764),940 II Kombi (945),940 II (944),940 Kombi (945),940 (944),960 II Kombi (965),960 II (964),960 Kombi (965),960 (964)
19914HPS	**Stange/Strebe, Stabilisator, Link Stabiliser, Entretoise/tige, stabilisateur**
	VOLVO C70 I Cabriolet,C70 I Coupe,S70 (P80_),V70 I Kombi (P80_),850 Kombi (LW),850 (LS)
19915	**Stange/Strebe, Stabilisator, Link Stabiliser, Entretoise/tige, stabilisateur**
	VOLVO 240 Kombi (P245),240 (P242, P244),260 Coupe (P262),260 Kombi (P265),260 (P262, P264)
19937	**Stange/Strebe, Stabilisator, Link Stabiliser, Entretoise/tige, stabilisateur**
	VOLVO S90,V90 Kombi,940 II Kombi (945),940 II (944),940 Kombi (945),960 II Kombi (965),960 II (964),960 Kombi (965),960 (964)
19937HPS	**Stange/Strebe, Stabilisator, Link Stabiliser, Entretoise/tige, stabilisateur**
	VOLVO S90,V90 Kombi,940 II Kombi (945),940 II (944),940 Kombi (945),960 II Kombi (965),960 II (964),960 Kombi (965),960 (964)

19938 **Stange/Strebe, Stabilisator, Link Stabiliser, Entretoise/tige, stabilisateur**

VOLVO S90,V90 Kombi,960 II Kombi (965),960 II (964)

19949 **Trag-/Führungsgelenk, Ball Joint, Rotule de suspension**

ROVER 100 Cabriolet (XP),100 (METRO) (XP)

19951 **Trag-/Führungsgelenk, Ball Joint, Rotule de suspension**

AUSTIN METRO,MG METRO

19954 **Trag-/Führungsgelenk, Ball Joint, Rotule de suspension**

ROVER 100 (METRO) (XP)

19955 **Trag-/Führungsgelenk, Ball Joint, Rotule de suspension**

ROVER 100 (METRO) (XP)

19956 **Spurstangenkopf, Tie Rod End, Rotule de barre de connexion**

HONDA CONCERTO (HW),CONCERTO Stufenheck (HWW),ROVER CABRIOLET (XW),200 Coupe (XW),200 Hatchback (XW),200 (RF),400 Hatchback (RT),400 (RT),400 Tourer (XW),400 (XW)

19957 **Stange/Strebe, Stabilisator, Link Stabiliser, Entretoise/tige, stabilisateur**

HONDA CONCERTO (HW),MG MG ZR,ROVER 200 Coupe (XW),200 Hatchback (XW),200 (RF),25 (RF),400 Tourer (XW),400 (XW)

19958 **Stange/Strebe, Stabilisator, Link Stabiliser, Entretoise/tige, stabilisateur**

ROVER 200 (XH)

19961 **Spurstangenkopf, Tie Rod End, Rotule de barre de connexion**

SKODA FAVORIT Forman (785),FAVORIT Pick-up (787),FAVORIT (781),FELICIA I Fun (797),FELICIA I Kombi (6U5),FELICIA I (6U1),FELICIA II Kombi (6U5),FELICIA II (6U1)

19962 **Trag-/Führungsgelenk, Ball Joint, Rotule de suspension**

SKODA FAVORIT Forman (785),FAVORIT Pick-up (787),FAVORIT (781),FELICIA I Fun (797),FELICIA I Kombi (6U5),FELICIA I (6U1),FELICIA II Kombi (6U5),FELICIA II (6U1)

19968 **Axialgelenk, Spurstange, Inner Tie Rod, Rotule de direction intérieure, barre de connexion**

SKODA FELICIA I Fun (797),FELICIA I Kombi (6U5),FELICIA I (6U1),FELICIA II Kombi (6U5),FELICIA II (6U1)

19971 **Lenker, Radaufhängung, Track Control Arm, Bras de liaison, suspension de roue**

SKODA FELICIA I Fun (797),FELICIA I Kombi (6U5),FELICIA I (6U1),FELICIA II Kombi (6U5),FELICIA II (6U1)

19972 **Lenker, Radaufhängung, Track Control Arm, Bras de liaison, suspension de roue**

SKODA FELICIA I Fun (797),FELICIA I Kombi (6U5),FELICIA I (6U1),FELICIA II Kombi (6U5),FELICIA II (6U1)

19973 **Axialgelenk, Spurstange, Inner Tie Rod, Rotule de direction intérieure, barre de connexion**

SKODA FAVORIT Forman (785),FELICIA I Kombi (6U5),FELICIA I (6U1),FELICIA II Kombi (6U5),FELICIA II (6U1),VW CADDY II Pick-up (9U7)

19980 **Trag-/Führungsgelenk, Ball Joint, Rotule de suspension**

SAAB 9000,9000 Schrägheck

19981 **Spurstangenkopf, Tie Rod End, Rotule de barre de connexion**

SAAB 9000,9000 Schrägheck

19982 **Spurstangenkopf, Tie Rod End, Rotule de barre de connexion**

SAAB 900 I Combi Coupe,900 II

19983 **Trag-/Führungsgelenk, Ball Joint, Rotule de suspension**

SAAB 90,900 I (AC4, AM4),900 I Cabriolet,900 I Combi Coupe,900 II,900 II Cabriolet,900 II Coupe,99,99 Combi Coupe

19984 **Lenker, Radaufhängung, Track Control Arm, Bras de liaison, suspension de roue**

SAAB 900 II,900 II Cabriolet,900 II Coupe,9-3 Cabriolet (YS3D),9-3 (YS3D)

19985 **Lenker, Radaufhängung, Track Control Arm, Bras de liaison, suspension de roue**

SAAB 900 II,900 II Cabriolet,900 II Coupe,9-3 Cabriolet (YS3D),9-3 (YS3D)

19993 **Lagerung, Lenker, Control Arm-/Trailing Arm Bush, Suspension, bras de liaison**

SKODA FAVORIT Forman (785),FAVORIT (781)

19994 **Lagerung, Lenker, Control Arm-/Trailing Arm Bush, Suspension, bras de liaison**

SKODA FAVORIT Forman (785),FAVORIT (781)

29795 **Gelenk, Lenksäule, Joint, steering column, Joint, colonne de direction**

FORD FIESTA III (GFJ),KA (RB_),STREET KA

33001 **Lagerung, Lenker, Control Arm-/Trailing Arm Bush, Suspension, bras de liaison**

CITROËN JUMPER Bus (230P),JUMPER Bus (244, Z_),JUMPER Kasten (230L),JUMPER Kasten (244),JUMPER Pritsche/Fahrgestell (230),JUMPER Pritsche/Fahrgestell (244),FIAT DUCATO Bus (230),DUCATO Bus (244, Z_),DUCATO Kasten (230L),DUCATO Kasten (244),DUCATO Pritsche/Fahrgestell (230),DUCATO Pritsche/Fahrgestell (244),PEUGEOT BOXER Bus (230P),BOXER Bus (244, Z_),BOXER Kasten (230L),BOXER Kasten (244),BOXER Pritsche/Fahrgestell (ZCT_),BOXER Pritsche/Fahrgestell (244)

33002 **Lagerung, Lenker, Control Arm-/Trailing Arm Bush, Suspension, bras de liaison**

FIAT SEICENTO (187),UNO (146A/E)

33003 **Lagerung, Lenker, Control Arm-/Trailing Arm Bush, Suspension, bras de liaison**

FIAT SEICENTO (187),UNO (146A/E)

33004 **Lagerung, Achskörper, Hub Carrier Bush, Suspension, corps de l'essieu**

SEAT IBIZA I (021A)

33005 **Lagerung, Achskörper, Hub Carrier Bush, Suspension, corps de l'essieu**

FIAT BARCHETTA (183),PUNTO Cabriolet (176C),PUNTO (176),PUNTO (188),LANCIA Y (840A)

33006	**Lagerung, Lenker, Control Arm-/Trailing Arm Bush, Suspension, bras de liaison**
	CITROËN JUMPER Bus (230P),JUMPER Kasten (230L),JUMPER Pritsche/Fahrgestell (230),FIAT DUCATO Bus (230),DUCATO Kasten (230L),DUCATO Pritsche/Fahrgestell (230),PEUGEOT BOXER Bus (230P),BOXER Kasten (230L),BOXER Pritsche/Fahrgestell (ZCT_)
33006/1	**Hülse, Querlenkerlagerung, Sleeve, control arm mounting, Manchon, fixation du bras transversal**
	CITROËN JUMPER Bus (230P),JUMPER Kasten (230L),JUMPER Pritsche/Fahrgestell (230),FIAT DUCATO Bus (230),DUCATO Kasten (230L),DUCATO Pritsche/Fahrgestell (230),PEUGEOT BOXER Bus (230P),BOXER Kasten (230L),BOXER Pritsche/Fahrgestell (ZCT_)
33007	**Lagerung, Lenker, Control Arm-/Trailing Arm Bush, Suspension, bras de liaison**
	ALFA ROMEO GT,147 (937),156 Sportwagon (932),156 (932)
33008	**Lagerung, Lenker, Control Arm-/Trailing Arm Bush, Suspension, bras de liaison**
	ALFA ROMEO GT,147 (937),156 Sportwagon (932),156 (932)
33009	**Stange/Strebe, Stabilisator, Link Stabiliser, Entretoise/tige, stabilisateur**
	ALFA ROMEO GTV (916C_),SPIDER (916S_),145 (930),146 (930),155 (167),FIAT BRAVA (182),BRAVO (182),COUPE (FA/175),TEMPRA S.W. (159),TEMPRA (159),TIPO (160),LANCIA DEDRA SW (835),DEDRA (835),DELTA II (836)
33010	**Lagerung, Lenker, Control Arm-/Trailing Arm Bush, Suspension, bras de liaison**
	ALFA ROMEO GT,147 (937),156 Sportwagon (932),156 (932)
33011	**Lagerung, Lenker, Control Arm-/Trailing Arm Bush, Suspension, bras de liaison**
	FIAT PUNTO Van (188AX),PUNTO (188)
33012	**Lagerung, Lenker, Control Arm-/Trailing Arm Bush, Suspension, bras de liaison**
	FIAT PUNTO Van (188AX),PUNTO (188)
33013	**Lagerung, Lenker, Control Arm-/Trailing Arm Bush, Suspension, bras de liaison**
	ALFA ROMEO GT,147 (937),156 Sportwagon (932),156 (932)
33014	**Lagerung, Lenker, Control Arm-/Trailing Arm Bush, Suspension, bras de liaison**
	ALFA ROMEO GT,147 (937),156 Sportwagon (932),156 (932)
33015	**Lagerung, Lenker, Control Arm-/Trailing Arm Bush, Suspension, bras de liaison**
	SAAB 9000,9000 Schrägheck
33016	**Lagerung, Lenker, Control Arm-/Trailing Arm Bush, Suspension, bras de liaison**
	SAAB 9000,9000 Schrägheck
33017	**Lagerung, Lenker, Control Arm-/Trailing Arm Bush, Suspension, bras de liaison**
	CITROËN C8 (EA_, EB_),EVASION (22, U6),JUMPY Kasten (BS_, BT_, BY_, BZ_),JUMPY Pritsche/Fahrgestell (BU_, BV_, BW_, BX_),JUMPY (U6U),FIAT SCUDO Combinato (220P),SCUDO Kasten (220L),ULYSSE (179AX),ULYSSE (220),PEUGEOT EXPERT Kasten (222),EXPERT Pritsche/Fahrgestell (223),EXPERT (224),806 (221)
33018	**Lagerung, Lenker, Control Arm-/Trailing Arm Bush, Suspension, bras de liaison**
	FIAT DOBLO Cargo (223),DOBLO (119),PALIO Weekend (178DX),STRADA (178E)
33019	**Lagerung, Lenker, Control Arm-/Trailing Arm Bush, Suspension, bras de liaison**
	ALFA ROMEO GTV (916C_),145 (930),146 (930),155 (167),FIAT BRAVA (182),BRAVO (182),COUPE (FA/175),MAREA Weekend (185),MAREA (185),TEMPRA S.W. (159),TEMPRA (159),LANCIA DEDRA SW (835),DEDRA (835),DELTA I (831AB0),DELTA II (836)
33035	**Lagerung, Lenker, Control Arm-/Trailing Arm Bush, Suspension, bras de liaison**
	ALFA ROMEO GTV (916C_),145 (930),146 (930),155 (167),FIAT BRAVA (182),BRAVO (182),COUPE (FA/175),MAREA Weekend (185),MAREA (185),TEMPRA S.W. (159),TEMPRA (159),LANCIA DEDRA SW (835),DEDRA (835),DELTA I (831AB0),DELTA II (836)
33039	**Lagerung, Achskörper, Hub Carrier Bush, Suspension, corps de l'essieu**
	FIAT PUNTO Cabriolet (176C),PUNTO Van (176L),PUNTO (176)
33040	**Lagerung, Achskörper, Hub Carrier Bush, Suspension, corps de l'essieu**
	FIAT PUNTO Cabriolet (176C),PUNTO (176)
33044	**Lagerung, Lenker, Control Arm-/Trailing Arm Bush, Suspension, bras de liaison**
	FIAT GRANDE PUNTO (199),OPEL CORSA D
33045	**Lagerung, Lenker, Control Arm-/Trailing Arm Bush, Suspension, bras de liaison**
	FIAT GRANDE PUNTO (199),OPEL CORSA D
33046	**Lagerung, Lenker, Control Arm-/Trailing Arm Bush, Suspension, bras de liaison**
	FIAT PALIO Weekend (178DX),PALIO (178BX),SIENA (178_),STRADA (178E)
33047	**Lagerung, Lenker, Control Arm-/Trailing Arm Bush, Suspension, bras de liaison**
	FIAT PALIO Weekend (178DX),PALIO (178BX),SIENA (178_),STRADA (178E)
33048	**Lagerung, Lenker, Control Arm-/Trailing Arm Bush, Suspension, bras de liaison**
	ALFA ROMEO BRERA,SPIDER,159,159 Sportwagon
33049	**Lagerung, Lenker, Control Arm-/Trailing Arm Bush, Suspension, bras de liaison**
	ALFA ROMEO BRERA,SPIDER,159,159 Sportwagon
33057	**Lagerung, Lenker, Control Arm-/Trailing Arm Bush, Suspension, bras de liaison**
	FIAT BRAVO,STILO Multi Wagon (192),STILO (192),LANCIA DELTA III
33069	**Lagerung, Lenker, Control Arm-/Trailing Arm Bush, Suspension, bras de liaison**
	FIAT PANDA (169)
33100	**Lagerung, Lenker, Control Arm-/Trailing Arm Bush, Suspension, bras de liaison**
	RENAULT RAPID Kasten (F40_, G40_),SUPER 5 (B/C40_),11 (B/C37_),9 (L42_)
33101	**Lagerung, Lenker, Control Arm-/Trailing Arm Bush, Suspension, bras de liaison**
	RENAULT 21 (B48_),21 Kombi (K48_),21 Stufenheck (L48_)

33102 **Lagerung, Lenker, Control Arm-/Trailing Arm Bush, Suspension, bras de liaison**

RENAULT 21 (B48_),21 Kasten (S48_),21 Kombi (K48_),21 Stufenheck (L48_)

33103 **Lagerung, Stabilisator, Anti-roll Bar Bush Kit, Suspension, stabilisateur**

RENAULT CLIO I (B/C57_, 5/357_)

33104 **Lagerung, Stabilisator, Anti-roll Bar Bush Kit, Suspension, stabilisateur**

RENAULT SUPER 5 (B/C40_),SUPER 5 Kasten (S40_),21 (B48_),21 Kasten (S48_),21 Kombi (K48_),21 Stufenheck (L48_)

33105 **Lagerung, Stabilisator, Anti-roll Bar Bush Kit, Suspension, stabilisateur**

RENAULT CLIO I (B/C57_, 5/357_),CLIO I Kasten (S57_),CLIO II (BB0/1/2_, CB0/1/2_)

33115 **Lagerung, Stabilisator, Anti-roll Bar Bush Kit, Suspension, stabilisateur**

RENAULT RAPID Kasten (F40_, G40_),SUPER 5 (B/C40_),SUPER 5 Kasten (S40_)

33116 **Lagerung, Stabilisator, Anti-roll Bar Bush Kit, Suspension, stabilisateur**

RENAULT RAPID Kasten (F40_, G40_),SUPER 5 (B/C40_),SUPER 5 Kasten (S40_)

33117 **Lagerung, Stabilisator, Anti-roll Bar Bush Kit, Suspension, stabilisateur**

RENAULT 19 I (B/C53_),19 I Cabriolet (D53_),19 I Chamade (L53_),19 I Kasten (S53_),19 II (B/C53_),19 II Cabriolet (D53_, 853_),19 II Chamade (L53_),19 II Kasten (S53_)

33118 **Lagerung, Stabilisator, Anti-roll Bar Bush Kit, Suspension, stabilisateur**

RENAULT CLIO I (B/C57_, 5/357_),CLIO I Kasten (S57_),CLIO II (BB0/1/2_, CB0/1/2_),MEGANE I (BA0/1_),MEGANE I Cabriolet (EA0/1_),MEGANE I Classic (LA0/1_),MEGANE I Coach (DA0/1_),MEGANE I Grandtour (KA0/1_),MEGANE II (BM0/1_, CM0/1_),MEGANE Scenic (JA0/1_),SCÉNIC I (JA0/1_),19 I (B/C53_),19 I Cabriolet (D53_),19 I Chamade (L53_),19 I Kasten (S53_),19 II (B/C53_),19 II Cabriolet (D53_, 853_),19 II Chamade (L53_),19 II Kasten (S53_)

33119 **Lagerung, Lenker, Control Arm-/Trailing Arm Bush, Suspension, bras de liaison**

RENAULT MEGANE II (BM0/1_, CM0/1_),MEGANE II Coupé-Cabriolet (EM0/1_),MEGANE II Grandtour (KM0/1_),MEGANE II Stufenheck (LM0/1_),SCÉNIC II (JM0/1_)

33120 **Lagerung, Lenker, Control Arm-/Trailing Arm Bush, Suspension, bras de liaison**

RENAULT MEGANE II (BM0/1_, CM0/1_),MEGANE II Coupé-Cabriolet (EM0/1_),MEGANE II Grandtour (KM0/1_),MEGANE II Stufenheck (LM0/1_),SCÉNIC II (JM0/1_)

33121 **Lagerung, Lenker, Control Arm-/Trailing Arm Bush, Suspension, bras de liaison**

RENAULT LAGUNA II (BG0/1_),LAGUNA II Grandtour (KG0/1_)

33122 **Lagerung, Lenker, Control Arm-/Trailing Arm Bush, Suspension, bras de liaison**

NISSAN PRIMASTAR Bus (X83),PRIMASTAR Kasten (X83),OPEL VIVARO Combi (J7),VIVARO Kasten (F7),RENAULT ESPACE IV (JK0/1_),LAGUNA II (BG0/1_),LAGUNA II Grandtour (KG0/1_),MEGANE II (BM0/1_, CM0/1_),MEGANE II Coupé-Cabriolet (EM0/1_),TRAFIC II Bus (JL),TRAFIC II Kasten (FL),VEL SATIS (BJ0_),VAUXHALL VIVARO Combi,VIVARO Kasten

33123 **Lagerung, Lenker, Control Arm-/Trailing Arm Bush, Suspension, bras de liaison**

RENAULT AVANTIME (DE0_),ESPACE III (JE0_),VEL SATIS (BJ0_)

33124 **Lagerung, Lenker, Control Arm-/Trailing Arm Bush, Suspension, bras de liaison**

DACIA LOGAN,LOGAN MCV,SANDERO,RENAULT LOGAN Kombi (KS_),LOGAN (LS_)

33127 **Lagerung, Stabilisator, Anti-roll Bar Bush Kit, Suspension, stabilisateur**

DACIA LOGAN,LOGAN MCV,SANDERO,RENAULT LOGAN Kombi (KS_),LOGAN (LS_)

33128 **Lagerung, Achskörper, Hub Carrier Bush, Suspension, corps de l'essieu**

RENAULT CLIO II (BB0/1/2_, CB0/1/2_),CLIO II Kasten (SB0/1/2_),THALIA (LB0/1/2_),TWINGO (CN0_)

33129 **Lagerung, Lenker, Control Arm-/Trailing Arm Bush, Suspension, bras de liaison**

RENAULT CLIO I (B/C57_, 5/357_),CLIO I Kasten (S57_)

33130 **Lagerung, Lenker, Control Arm-/Trailing Arm Bush, Suspension, bras de liaison**

RENAULT CLIO I (B/C57_, 5/357_),CLIO I Kasten (S57_)

33143 **Lagerung, Lenker, Control Arm-/Trailing Arm Bush, Suspension, bras de liaison**

RENAULT TWINGO (C06_),TWINGO Kasten (S06_)

33144 **Lagerung, Lenker, Control Arm-/Trailing Arm Bush, Suspension, bras de liaison**

RENAULT TWINGO (C06_),TWINGO Kasten (S06_)

33145 **Lagerung, Stabilisator, Anti-roll Bar Bush Kit, Suspension, stabilisateur**

RENAULT MEGANE I (BA0/1_),MEGANE I Cabriolet (EA0/1_),MEGANE I Classic (LA0/1_),MEGANE I Coach (DA0/1_),MEGANE I Grandtour (KA0/1_),MEGANE II (BM0/1_, CM0/1_),MEGANE Scenic (JA0/1_),SCÉNIC I (JA0/1_),19 I (B/C53_),19 I Cabriolet (D53_),19 I Chamade (L53_),19 II (B/C53_),19 II Cabriolet (D53_, 853_),19 II Chamade (L53_),19 II Kasten (S53_)

33146 **Lagerung, Lenker, Control Arm-/Trailing Arm Bush, Suspension, bras de liaison**

RENAULT MEGANE I (BA0/1_),MEGANE I Cabriolet (EA0/1_),MEGANE I Classic (LA0/1_),MEGANE I Coach (DA0/1_),MEGANE I Grandtour (KA0/1_),MEGANE Scenic (JA0/1_),SCÉNIC I (JA0/1_),19 I (B/C53_),19 I Cabriolet (D53_),19 I Chamade (L53_),19 I Kasten (S53_),19 II (B/C53_),19 II Cabriolet (D53_, 853_),19 II Chamade (L53_),19 II Kasten (S53_)

33147 **Lagerung, Lenker, Control Arm-/Trailing Arm Bush, Suspension, bras de liaison**

RENAULT LAGUNA (B56_, 556_),LAGUNA Grandtour (K56_)

33148 **Lagerung, Lenker, Control Arm-/Trailing Arm Bush, Suspension, bras de liaison**

RENAULT LAGUNA (B56_, 556_),LAGUNA Grandtour (K56_)

33164 **Stange/Strebe, Stabilisator, Link Stabiliser, Entretoise/tige, stabilisateur**

NISSAN KUBISTAR (X76),RENAULT CLIO I (B/C57_, 5/357_),CLIO II (BB0/1/2_, CB0/1/2_),KANGOO (KC0/1_),KANGOO Rapid (FC0/1_),THALIA (LB0/1/2_)

33165 **Lagerung, Lenker, Control Arm-/Trailing Arm Bush, Suspension, bras de liaison**

NISSAN KUBISTAR (X76),RENAULT CLIO II (BB0/1/2_, CB0/1/2_),KANGOO (KC0/1_),KANGOO Rapid (FC0/1_)

33167	**Lagerung, Stabilisator, Anti-roll Bar Bush Kit, Suspension, stabilisateur**
	RENAULT MEGANE I (BA0/1_),MEGANE I Cabriolet (EA0/1_),MEGANE I Classic (LA0/1_),MEGANE I Coach (DA0/1_),MEGANE I Grandtour (KA0/1_),MEGANE Scenic (JA0/1_)
33168	**Lagerung, Stabilisator, Anti-roll Bar Bush Kit, Suspension, stabilisateur**
	RENAULT ESPACE II (J/S63_),25 (B29_)
33169	**Lagerung, Stabilisator, Anti-roll Bar Bush Kit, Suspension, stabilisateur**
	RENAULT ESPACE II (J/S63_)
33170	**Lagerung, Lenker, Control Arm-/Trailing Arm Bush, Suspension, bras de liaison**
	RENAULT SAFRANE I (B54_),SAFRANE II (B54_)
33171	**Lagerung, Lenker, Control Arm-/Trailing Arm Bush, Suspension, bras de liaison**
	RENAULT SAFRANE I (B54_),SAFRANE II (B54_)
33172	**Stange/Strebe, Stabilisator, Link Stabiliser, Entretoise/tige, stabilisateur**
	RENAULT MEGANE I (BA0/1_),MEGANE I Cabriolet (EA0/1_),MEGANE I Classic (LA0/1_),MEGANE I Coach (DA0/1_),MEGANE I Grandtour (KA0/1_),MEGANE Scenic (JA0/1_)
33173	**Lagerung, Achskörper, Hub Carrier Bush, Suspension, corps de l'essieu**
	DACIA LOGAN,LOGAN MCV,SANDERO,RENAULT LOGAN Kombi (KS_),LOGAN (LS_)
33220	**Lagerung, Lenker, Control Arm-/Trailing Arm Bush, Suspension, bras de liaison**
	HONDA CIVIC IV Coupe (EJ),CIVIC IV (EG, EH),CIVIC IV Fastback (MA, MB),CIVIC IV Hatchback (EG),CIVIC V Coupe (EJ6, EJ8),CIVIC V (EJ9, EK3/4),CIVIC V Hatchback (EJ9, EK1/3/4)
33221	**Lagerung, Lenker, Control Arm-/Trailing Arm Bush, Suspension, bras de liaison**
	HONDA CRX II (ED, EE)
33222	**Lagerung, Lenker, Control Arm-/Trailing Arm Bush, Suspension, bras de liaison**
	HONDA ACCORD V (CC7, CD),ACCORD VI (CE, CF)
33223	**Lagerung, Lenker, Control Arm-/Trailing Arm Bush, Suspension, bras de liaison**
	HONDA CIVIC VI Coupe (EM),CIVIC VI (EU),CIVIC VI Hatchback (EU, EP, ES),CRX II (ED, EE),CRX III (EH, EG),ROVER CABRIOLET (XW),COUPE,200 Coupe (XW),200 Hatchback (XW),200 (RF),200 (XH),25 (RF),400 Hatchback (RT),400 (RT),400 Tourer (XW),400 (XW),45 (RT),45 Stufenheck (RT)
33224	**Lagerung, Lenker, Control Arm-/Trailing Arm Bush, Suspension, bras de liaison**
	HONDA CIVIC III Hatchback (EC, ED, EE),CIVIC III Stufenheck (ED),CRX II (ED, EE)
33225	**Lagerung, Lenker, Control Arm-/Trailing Arm Bush, Suspension, bras de liaison**
	HONDA CIVIC III Hatchback (EC, ED, EE),CIVIC III Stufenheck (ED),CRX II (ED, EE)
33226	**Lagerung, Lenker, Control Arm-/Trailing Arm Bush, Suspension, bras de liaison**
	HONDA CIVIC VI Coupe (EM),CIVIC VI (EU),CIVIC VI Hatchback (EU, EP, ES)
33300	**Lagerung, Stabilisator, Anti-roll Bar Bush Kit, Suspension, stabilisateur**
	PEUGEOT 206 CC (2D),206 Schrägheck (2A/C, T3E),206 SW (2E/K)
33303	**Lagerung, Achskörper, Hub Carrier Bush, Suspension, corps de l'essieu**
	PEUGEOT 206 CC (2D),206 Schrägheck (2A/C, T3E),206 SW (2E/K)
33305	**Lagerung, Lenker, Control Arm-/Trailing Arm Bush, Suspension, bras de liaison**
	PEUGEOT 504 (A_, M_),504 Break (D_, F_),504 Cabriolet,504 Coupe,504 Pick-up (E_),505 Break (551D),505 (551A),604 (561A_)
33306	**Lagerung, Lenker, Control Arm-/Trailing Arm Bush, Suspension, bras de liaison**
	CITROËN VISA,PEUGEOT 205 I Cabriolet (741B, 20D),205 I (741A/C),205 II (20A/C),309 I (10C, 10A),309 II (3C, 3A)
33307	**Lagerung, Lenker, Control Arm-/Trailing Arm Bush, Suspension, bras de liaison**
	CITROËN C15 (VD-_),LNA,VISA,VISA Cabriolet,PEUGEOT 104,104 Coupe,205 I Cabriolet (741B, 20D),205 I (741A/C),205 II (20A/C),205 Kasten,309 I (10C, 10A),309 II (3C, 3A)
33311	**Lagerung, Stabilisator, Anti-roll Bar Bush Kit, Suspension, stabilisateur**
	PEUGEOT 205 I Cabriolet (741B, 20D),205 I (741A/C),205 II (20A/C),205 Kasten,309 I (10C, 10A),309 II (3C, 3A)
33311/1	**Lagerung, Stabilisator, Anti-roll Bar Bush Kit, Suspension, stabilisateur**
	PEUGEOT 205 I Cabriolet (741B, 20D),205 I (741A/C),205 II (20A/C),205 Kasten,309 I (10C, 10A),309 II (3C, 3A)
33311/2	**Lagerung, Stabilisator, Anti-roll Bar Bush Kit, Suspension, stabilisateur**
	PEUGEOT 205 I Cabriolet (741B, 20D),205 I (741A/C),205 II (20A/C),205 Kasten,309 I (10C, 10A),309 II (3C, 3A)
33313	**Lagerung, Lenker, Control Arm-/Trailing Arm Bush, Suspension, bras de liaison**
	PEUGEOT 106 I (1A, 1C),106 II (1)
33314	**Lagerung, Lenker, Control Arm-/Trailing Arm Bush, Suspension, bras de liaison**
	PEUGEOT 106 I (1A, 1C),106 II (1)
33315	**Lagerung, Lenker, Control Arm-/Trailing Arm Bush, Suspension, bras de liaison**
	PEUGEOT 206 CC (2D),206 Schrägheck (2A/C, T3E),206 SW (2E/K)
33316	**Lagerung, Lenker, Control Arm-/Trailing Arm Bush, Suspension, bras de liaison**
	PEUGEOT 206 CC (2D),206 Schrägheck (2A/C, T3E),206 SW (2E/K)
33317	**Lagerung, Lenker, Control Arm-/Trailing Arm Bush, Suspension, bras de liaison**
	PEUGEOT 206 CC (2D),206 Schrägheck (2A/C, T3E),206 SW (2E/K)
33318	**Lagerung, Lenker, Control Arm-/Trailing Arm Bush, Suspension, bras de liaison**
	PEUGEOT 406 Break (8E/F),406 Coupe (8C),406 (8B)

33319 **Lagerung, Lenker, Control Arm-/Trailing Arm Bush, Suspension, bras de liaison**

PEUGEOT 406 Break (8E/F),406 Coupe (8C),406 (8B)

33320 **Lagerung, Lenker, Control Arm-/Trailing Arm Bush, Suspension, bras de liaison**

PEUGEOT 309 I (10C, 10A),405 I Break (15E),405 I (15B),405 II Break (4E),405 II (4B)

33321 **Lagerung, Achskörper, Hub Carrier Bush, Suspension, corps de l'essieu**

CITROËN ZX Break (N2),ZX (N2),PEUGEOT 306 Break (7E, N3, N5),306 Cabriolet (7D, N3, N5),306 Schrägheck (7A, 7C, N3, N5),306 (7B, N3, N5)

33322 **Lagerung, Lenker, Control Arm-/Trailing Arm Bush, Suspension, bras de liaison**

PEUGEOT 405 I Break (15E),405 I (15B),405 II Break (4E),405 II (4B)

33323 **Lagerung, Stabilisator, Anti-roll Bar Bush Kit, Suspension, stabilisateur**

CITROËN AX (ZA-_),SAXO (S0, S1),PEUGEOT 106 I (1A, 1C),106 II (1)

33324 **Lagerung, Stabilisator, Anti-roll Bar Bush Kit, Suspension, stabilisateur**

CITROËN AX (ZA-_),SAXO (S0, S1),PEUGEOT 106 I (1A, 1C),106 II (1)

33325 **Lagerung, Stabilisator, Anti-roll Bar Bush Kit, Suspension, stabilisateur**

CITROËN AX (ZA-_),SAXO (S0, S1),PEUGEOT 106 I (1A, 1C),106 II (1)

33326 **Lagerung, Achsträger, Mounting, axle bracket, Suspension, support d'essieu**

PEUGEOT 309 I (10C, 10A),405 I Break (15E),405 I (15B),405 II Break (4E),405 II (4B)

33327 **Lagerung, Achsträger, Mounting, axle bracket, Suspension, support d'essieu**

CITROËN C1 (PM_, PN_),PEUGEOT 107,205 I (741A/C),205 II (20A/C),309 I (10C, 10A),309 II (3C, 3A),TOYOTA AYGO (B10)

33329 **Lagerung, Achskörper, Hub Carrier Bush, Suspension, corps de l'essieu**

CITROËN ZX (N2),PEUGEOT 306 Break (7E, N3, N5),306 Cabriolet (7D, N3, N5),306 Schrägheck (7A, 7C, N3, N5),306 (7B, N3, N5)

33330 **Lagerung, Achskörper, Hub Carrier Bush, Suspension, corps de l'essieu**

CITROËN ZX (N2),PEUGEOT 306 Break (7E, N3, N5),306 Cabriolet (7D, N3, N5),306 Schrägheck (7A, 7C, N3, N5),306 (7B, N3, N5)

33333 **Lagerung, Lenker, Control Arm-/Trailing Arm Bush, Suspension, bras de liaison**

PEUGEOT 406 Break (8E/F),406 (8B)

33334 **Lagerung, Lenker, Control Arm-/Trailing Arm Bush, Suspension, bras de liaison**

CITROËN C2 (JM_),C3 (FC_),C3 Pluriel (HB_),PEUGEOT 1007 (KM_)

33335 **Lagerung, Lenker, Control Arm-/Trailing Arm Bush, Suspension, bras de liaison**

CITROËN C2 (JM_),C3 (FC_),C3 Pluriel (HB_),PEUGEOT 1007 (KM_)

33336 **Lagerung, Lenker, Control Arm-/Trailing Arm Bush, Suspension, bras de liaison**

CITROËN BERLINGO,BERLINGO Kasten,C4 Coupe (LA_),C4 Grand Picasso (UA_),C4 (LC_),C4 Picasso (UD_),PEUGEOT PARTNER Kasten,PARTNER Tepee,3008,307 Break (3E),307 CC (3B),307 SW (3H),307 (3A/C),308 CC,308 SW,308 (4A_, 4C_),5008

33337 **Lagerung, Stabilisator, Anti-roll Bar Bush Kit, Suspension, stabilisateur**

CITROËN XSARA (N1),ZX (N2),PEUGEOT 306 Break (7E, N3, N5),306 Cabriolet (7D, N3, N5),306 Schrägheck (7A, 7C, N3, N5),306 (7B, N3, N5)

33338 **Lagerung, Achskörper, Hub Carrier Bush, Suspension, corps de l'essieu**

PEUGEOT 406 Break (8E/F),406 Coupe (8C),406 (8B)

33340 **Lagerung, Lenker, Control Arm-/Trailing Arm Bush, Suspension, bras de liaison**

PEUGEOT 206 CC (2D),206 Schrägheck (2A/C, T3E),206 SW (2E/K)

33400 **Lagerung, Stabilisator, Anti-roll Bar Bush Kit, Suspension, stabilisateur**

CITROËN AX (ZA-_)

33402 **Lagerung, Stabilisator, Anti-roll Bar Bush Kit, Suspension, stabilisateur**

CITROËN AX (ZA-_)

33403 **Lagerung, Stabilisator, Anti-roll Bar Bush Kit, Suspension, stabilisateur**

CITROËN XANTIA Break (X1),XANTIA Break (X2),XANTIA (X1),XANTIA (X2)

33409 **Lagerung, Stabilisator, Anti-roll Bar Bush Kit, Suspension, stabilisateur**

CITROËN AX (ZA-_)

33414 **Lagerung, Lenker, Control Arm-/Trailing Arm Bush, Suspension, bras de liaison**

CITROËN AX (ZA-_),SAXO (S0, S1)

33415 **Lagerung, Lenker, Control Arm-/Trailing Arm Bush, Suspension, bras de liaison**

CITROËN AX (ZA-_),SAXO (S0, S1)

33416 **Lagerung, Lenker, Control Arm-/Trailing Arm Bush, Suspension, bras de liaison**

CITROËN ZX Break (N2),ZX (N2),PEUGEOT PARTNER Combispace (5F),PARTNER Kasten (5),306 Break (7E, N3, N5),306 Cabriolet (7D, N3, N5),306 Schrägheck (7A, 7C, N3, N5),306 (7B, N3, N5)

33417 **Lagerung, Lenker, Control Arm-/Trailing Arm Bush, Suspension, bras de liaison**

CITROËN ZX Break (N2),ZX (N2),PEUGEOT 306 Break (7E, N3, N5),306 Cabriolet (7D, N3, N5),306 Schrägheck (7A, 7C, N3, N5),306 (7B, N3, N5)

33420 **Lagerung, Stabilisator, Anti-roll Bar Bush Kit, Suspension, stabilisateur**

CITROËN AX (ZA-_),SAXO (S0, S1),PEUGEOT 106 I (1A, 1C)

33421 **Lagerung, Stabilisator, Anti-roll Bar Bush Kit, Suspension, stabilisateur**

CITROËN ZX Break (N2),ZX (N2)

33422 **Lagerung, Stabilisator, Anti-roll Bar Bush Kit, Suspension, stabilisateur**

CITROËN ZX Break (N2),ZX (N2)

33423 **Lagerung, Stabilisator, Anti-roll Bar Bush Kit, Suspension, stabilisateur**

CITROËN ZX Break (N2),ZX (N2)

33424 **Lagerung, Stabilisator, Anti-roll Bar Bush Kit, Suspension, stabilisateur**

CITROËN BERLINGO Kasten (M_),BERLINGO (MF),ZX Break (N2),ZX (N2),PEUGEOT PARTNER Combispace (5F),PARTNER Kasten (5),306 Break (7E, N3, N5),306 Cabriolet (7D, N3, N5),306 Schrägheck (7A, 7C, N3, N5),306 (7B, N3, N5)

33425 **Lagerung, Lenker, Control Arm-/Trailing Arm Bush, Suspension, bras de liaison**

CITROËN XANTIA Break (X1),XANTIA Break (X2),XANTIA (X1),XANTIA (X2)

33426 **Lagerung, Lenker, Control Arm-/Trailing Arm Bush, Suspension, bras de liaison**

CITROËN XANTIA Break (X1),XANTIA Break (X2),XANTIA (X1),XANTIA (X2)

33427 **Lagerung, Lenker, Control Arm-/Trailing Arm Bush, Suspension, bras de liaison**

CITROËN C5 Break (DE_),C5 Break (RE_),C5 (DC_),C5 (RC_)

33428 **Lagerung, Lenker, Control Arm-/Trailing Arm Bush, Suspension, bras de liaison**

CITROËN C5 Break (DE_),C5 Break (RE_),C5 (DC_),C5 (RC_)

33430 **Lagerung, Blattfeder, Mounting, leaf spring, Suspension, ressort à lames**

CITROËN JUMPER Bus (230P),JUMPER Bus (244, Z_),JUMPER Kasten (230L),JUMPER Kasten (244),JUMPER Pritsche/Fahrgestell (230),JUMPER Pritsche/Fahrgestell (244),FIAT DUCATO Bus (230),DUCATO Bus (244, Z_),DUCATO Kasten (230L),DUCATO Kasten (244),DUCATO Pritsche/Fahrgestell (230),DUCATO Pritsche/Fahrgestell (244),PEUGEOT BOXER Bus (230P),BOXER Bus (244, Z_),BOXER Kasten (230L),BOXER Kasten (244),BOXER Pritsche/Fahrgestell (ZCT_),BOXER Pritsche/Fahrgestell (244)

33431 **Lagerung, Lenker, Control Arm-/Trailing Arm Bush, Suspension, bras de liaison**

CITROËN BERLINGO Kasten (M_),BERLINGO (MF),XSARA PICASSO (N68),PEUGEOT PARTNER Combispace (5F),PARTNER Kasten (5)

33432 **Lagerung, Blattfeder, Mounting, leaf spring, Suspension, ressort à lames**

CITROËN JUMPER Bus (230P),JUMPER Bus (244, Z_),JUMPER Kasten (230L),JUMPER Kasten (244),JUMPER Pritsche/Fahrgestell (230),JUMPER Pritsche/Fahrgestell (244),FIAT DUCATO Bus (230),DUCATO Bus (244, Z_),DUCATO Kasten (230L),DUCATO Kasten (244),DUCATO Pritsche/Fahrgestell (230),DUCATO Pritsche/Fahrgestell (244),PEUGEOT BOXER Bus (230P),BOXER Bus (244, Z_),BOXER Kasten (230L),BOXER Kasten (244),BOXER Pritsche/Fahrgestell (ZCT_),BOXER Pritsche/Fahrgestell (244)

33433 **Lagerung, Achskörper, Hub Carrier Bush, Suspension, corps de l'essieu**

CITROËN BERLINGO Kasten (M_),BERLINGO (MF),XSARA PICASSO (N68),PEUGEOT PARTNER Combispace (5F),PARTNER Kasten (5)

33434 **Lagerung, Lenker, Control Arm-/Trailing Arm Bush, Suspension, bras de liaison**

CITROËN BERLINGO,BERLINGO Kasten,C4 Coupe (LA_),C4 Grand Picasso (UA_),C4 (LC_),C4 Picasso (UD_),C4 Stufenheck,PEUGEOT PARTNER Kasten,PARTNER Tepee,3008,307 Break (3E),307 CC (3B),307 SW (3H),307 (3A/C),308 CC,308 SW,308 (4A_, 4C_),5008

33435 **Lagerung, Lenker, Control Arm-/Trailing Arm Bush, Suspension, bras de liaison**

CITROËN C3 Picasso,PEUGEOT 207 CC (WD_),207 SW (WK_),207 (WA_, WC_)

33436 **Lagerung, Lenker, Control Arm-/Trailing Arm Bush, Suspension, bras de liaison**

CITROËN C3 Picasso,PEUGEOT 207 CC (WD_),207 SW (WK_),207 (WA_, WC_)

33437 **Lagerung, Lenker, Control Arm-/Trailing Arm Bush, Suspension, bras de liaison**

CITROËN XANTIA Break (X1),XANTIA Break (X2),XANTIA (X1),XANTIA (X2)

33500 **Lagerung, Lenker, Control Arm-/Trailing Arm Bush, Suspension, bras de liaison**

NISSAN SUNNY III Hatchback (N14),SUNNY III Liftback (N14),SUNNY III (N14),SUNNY III Traveller (Y10),SUNNY Kasten (Y10)

33501 **Lagerung, Lenker, Control Arm-/Trailing Arm Bush, Suspension, bras de liaison**

NISSAN MICRA (K11)

33502 **Lagerung, Lenker, Control Arm-/Trailing Arm Bush, Suspension, bras de liaison**

NISSAN MICRA (K11)

33503 **Lagerung, Lenker, Control Arm-/Trailing Arm Bush, Suspension, bras de liaison**

NISSAN PRIMERA Hatchback (P10),PRIMERA (P10)

33504 **Lagerung, Lenker, Control Arm-/Trailing Arm Bush, Suspension, bras de liaison**

NISSAN PRIMERA Hatchback (P10),PRIMERA Hatchback (P11),PRIMERA (P10),PRIMERA (P11),PRIMERA Traveller (WP11)

33505 **Lagerung, Lenker, Control Arm-/Trailing Arm Bush, Suspension, bras de liaison**

NISSAN PRIMERA Hatchback (P10),PRIMERA Hatchback (P11),PRIMERA (P10),PRIMERA (P11),PRIMERA Traveller (WP11)

33506 **Lagerung, Lenker, Control Arm-/Trailing Arm Bush, Suspension, bras de liaison**

NISSAN MAXIMA QX (A32)

33507 **Lagerung, Lenker, Control Arm-/Trailing Arm Bush, Suspension, bras de liaison**

NISSAN SUNNY II Coupe (B12),SUNNY II Hatchback (N13),SUNNY II (N13),SUNNY II Traveller (B12),SUNNY III Hatchback (N14),SUNNY III Liftback (N14),SUNNY III (N14),SUNNY III Traveller (Y10),SUNNY Kasten (Y10)

33510 **Lagerung, Achskörper, Hub Carrier Bush, Suspension, corps de l'essieu**

HYUNDAI PONY (X-2),PONY/EXCEL Stufenheck (X-2)

33511 **Lagerung, Lenker, Control Arm-/Trailing Arm Bush, Suspension, bras de liaison**

NISSAN MAXIMA QX (A32)

33520 **Lagerung, Lenker, Control Arm-/Trailing Arm Bush, Suspension, bras de liaison**

HONDA CIVIC III Hatchback (EC, ED, EE),CIVIC III Stufenheck (ED),CIVIC IV Coupe (EJ),CIVIC IV (EG, EH),CIVIC IV Fastback (MA, MB),CIVIC IV Hatchback (EG),CIVIC V Aerodeck,CIVIC V Coupe (EJ6, EJ8),CIVIC V (EJ9, EK3/4),CIVIC V Fastback (MB),CIVIC V Hatchback (EJ9, EK1/3/4)

33521 **Lagerung, Lenker, Control Arm-/Trailing Arm Bush, Suspension, bras de liaison**

HONDA CIVIC IV Coupe (EJ),CIVIC IV (EG, EH),CIVIC IV Fastback (MA, MB),CIVIC IV Hatchback (EG),CIVIC V (EJ9, EK3/4),CIVIC V Fastback (MB),CIVIC V Hatchback (EJ9, EK1/3/4)

33522 **Lagerung, Lenker, Control Arm-/Trailing Arm Bush, Suspension, bras de liaison**

HONDA ACCORD III Aerodeck (CA5),ACCORD III (CA4, CA5),ACCORD IV Aerodeck (CB8, CB9),ACCORD IV (CB3, CB7),CIVIC III Hatchback (EC, ED, EE),CIVIC III Stufenheck (ED),CIVIC IV (EG, EH),PRELUDE III (BA)

33523 **Lagerung, Lenker, Control Arm-/Trailing Arm Bush, Suspension, bras de liaison**

HONDA ACCORD VI (CE, CF),ROVER 600 (RH)

33524 **Lagerung, Lenker, Control Arm-/Trailing Arm Bush, Suspension, bras de liaison**

HONDA CIVIC II Shuttle (EE),CIVIC III Hatchback (EC, ED, EE),CIVIC III Stufenheck (ED),CIVIC IV Coupe (EJ),CIVIC IV (EG, EH),CIVIC IV Fastback (MA, MB),CIVIC IV Hatchback (EG),CIVIC V Aerodeck,CIVIC V Fastback (MB),CIVIC VI Coupe (EM),CIVIC VI Hatchback (EU, EP, ES)

33525 **Lagerung, Lenker, Control Arm-/Trailing Arm Bush, Suspension, bras de liaison**

HONDA CIVIC IV Coupe (EJ),CIVIC IV Fastback (MA, MB),CIVIC V Aerodeck,CIVIC V Fastback (MB),CR-V I (RD)

33526 **Lagerung, Lenker, Control Arm-/Trailing Arm Bush, Suspension, bras de liaison**

HONDA CIVIC IV Coupe (EJ),CIVIC IV Fastback (MA, MB),CIVIC V Aerodeck,CIVIC V Fastback (MB),CR-V I (RD)

33527 **Lagerung, Lenker, Control Arm-/Trailing Arm Bush, Suspension, bras de liaison**

HONDA CIVIC II,CIVIC III Hatchback (EC, ED, EE),CIVIC III Stufenheck (ED),CIVIC IV Coupe (EJ),CIVIC IV (EG, EH),CIVIC IV Hatchback (EG),CRX II (ED, EE),CRX III (EH, EG)

33528 **Lagerung, Lenker, Control Arm-/Trailing Arm Bush, Suspension, bras de liaison**

HONDA CIVIC IV Coupe (EJ),CIVIC IV (EG, EH),CIVIC IV Fastback (MA, MB),CIVIC IV Hatchback (EG),CR-V I (RD)

33529 **Reparatursatz, Stabilisatorkoppelstange, Anti-roll Bar Stabiliser Kit, Kit de réparation, barre de couplage stabilisatrice**

NISSAN ALMERA I Hatchback (N15),ALMERA I (N15),ALMERA II Hatchback (N16),ALMERA II (N16),ALMERA TINO (V10),MICRA (K11),PRIMERA Hatchback (P10),PRIMERA (P10),PRIMERA Traveller (W10),SUNNY III Hatchback (N14),SUNNY III Liftback (N14),SUNNY III (N14),100 NX (B13)

33530 **Lagerung, Lenker, Control Arm-/Trailing Arm Bush, Suspension, bras de liaison**

MAZDA 626 IV (GE),626 IV Hatchback (GE)

33531 **Lagerung, Lenker, Control Arm-/Trailing Arm Bush, Suspension, bras de liaison**

MAZDA 626 IV (GE),626 IV Hatchback (GE)

33532/4 **Lagerung, Stabilisatorkoppelstange, Mounting, stabilizer coupling rod, Suspension, barre de couplage stabilisatrice**

MAZDA 323 C IV (BG),323 C V (BA),323 F IV (BG),323 F V (BA),323 F VI (BJ),323 I (FA),323 I Station Wagon (FA),323 II (BD),323 II Hatchback (BD),323 III (BF),323 III Hatchback (BF),323 III Station Wagon (BW),323 P V (BA),323 S IV (BG),323 S V (BA),323 S VI (BJ),626 I (CB),626 II (GC),626 II Hatchback (GC),626 III Coupe (GD),626 III (GD),626 III Hatchback (GD),626 III Station Wagon (GV),626 IV (GE),626 IV Hatchback (GE),626 V (GF),626 V Hatchback (GF),626 V Station Wagon (GW)

33533 **Lagerung, Lenker, Control Arm-/Trailing Arm Bush, Suspension, bras de liaison**

MAZDA 323 C IV (BG),323 F IV (BG),323 S IV (BG)

33534 **Lagerung, Lenker, Control Arm-/Trailing Arm Bush, Suspension, bras de liaison**

MAZDA 626 IV (GE),626 IV Hatchback (GE)

33535 **Lagerung, Lenker, Control Arm-/Trailing Arm Bush, Suspension, bras de liaison**

MAZDA 323 C V (BA),323 F V (BA),323 S V (BA)

33536 **Lagerung, Lenker, Control Arm-/Trailing Arm Bush, Suspension, bras de liaison**

MAZDA 626 V (GF),626 V Hatchback (GF)

33537 **Lagerung, Lenker, Control Arm-/Trailing Arm Bush, Suspension, bras de liaison**

MAZDA 626 V (GF),626 V Hatchback (GF)

33538 **Lagerung, Lenker, Control Arm-/Trailing Arm Bush, Suspension, bras de liaison**

MAZDA 323 F VI (BJ),323 S VI (BJ)

33539 **Lagerung, Lenker, Control Arm-/Trailing Arm Bush, Suspension, bras de liaison**

MAZDA 323 F VI (BJ),323 S VI (BJ)

33540 **Lagerung, Lenker, Control Arm-/Trailing Arm Bush, Suspension, bras de liaison**

MAZDA 323 C V (BA),323 F V (BA),323 S V (BA)

33541 **Lagerung, Lenker, Control Arm-/Trailing Arm Bush, Suspension, bras de liaison**

MAZDA 323 I Station Wagon (FA),323 II (BD),323 II Hatchback (BD),323 III (BF),323 III Hatchback (BF),323 III Station Wagon (BW)

33550 **Lagerung, Lenker, Control Arm-/Trailing Arm Bush, Suspension, bras de liaison**

MITSUBISHI LANCER V (CB/D_A),LANCER V Station Wagon (CB_W, CD_W),PROTON PERSONA 300 (C9_M),PERSONA 400 (C9_S),PERSONA 400 Hatchback (C9_C, C9_S)

33550/1 **Lagerung, Lenker, Control Arm-/Trailing Arm Bush, Suspension, bras de liaison**

MITSUBISHI CARISMA (DA_),CARISMA Stufenheck (DA_),COLT IV (CA_A),PROTON PERSONA 300 (C9_M),PERSONA 400 (C9_S),PERSONA 400 Hatchback (C9_C, C9_S),VOLVO S40 I (VS),V40 Kombi (VW)

33551 **Lagerung, Lenker, Control Arm-/Trailing Arm Bush, Suspension, bras de liaison**

MITSUBISHI LANCER V (CB/D_A),LANCER V Station Wagon (CB_W, CD_W),PROTON PERSONA 300 (C9_M),PERSONA 400 (C9_S),PERSONA 400 Hatchback (C9_C, C9_S)

33551/1 **Lagerung, Lenker, Control Arm-/Trailing Arm Bush, Suspension, bras de liaison**

MITSUBISHI CARISMA (DA_),CARISMA Stufenheck (DA_),COLT IV (CA_A),PROTON PERSONA 300 (C9_M),PERSONA 400 (C9_S),PERSONA 400 Hatchback (C9_C, C9_S),VOLVO S40 I (VS),V40 Kombi (VW)

33552 **Lagerung, Lenker, Control Arm-/Trailing Arm Bush, Suspension, bras de liaison**

MITSUBISHI LANCER V (CB/D_A),LANCER V Station Wagon (CB_W, CD_W),PROTON PERSONA 300 (C9_M),PERSONA 400 (C9_S),PERSONA 400 Hatchback (C9_C, C9_S)

33553 **Lagerung, Lenker, Control Arm-/Trailing Arm Bush, Suspension, bras de liaison**

MITSUBISHI PAJERO I Canvas Top (L04_G),PAJERO I (L04_G, L14_G),PAJERO II Canvas Top (V2_W, V4_W),PAJERO II (V2_W, V4_W),PAJERO III (V60, V70),PAJERO PININ (H6_W, H7_W),PAJERO SPORT (K90)

33560 **Lagerung, Lenker, Control Arm-/Trailing Arm Bush, Suspension, bras de liaison**

TOYOTA COROLLA Compact (_E10_),COROLLA Compact (_E9_),COROLLA (_E10_),COROLLA (_E9_),COROLLA Liftback (_E9_),COROLLA Station Wagon (_E9_),COROLLA Wagon (_E10_)

33561	**Lagerung, Lenker, Control Arm-/Trailing Arm Bush, Suspension, bras de liaison**
	TOYOTA COROLLA Compact (_E10_),COROLLA (_E10_),COROLLA Liftback (_E10_),COROLLA Wagon (_E10_)
33562	**Lagerung, Lenker, Control Arm-/Trailing Arm Bush, Suspension, bras de liaison**
	TOYOTA COROLLA Compact (_E10_),COROLLA (_E10_),COROLLA Liftback (_E10_),COROLLA Wagon (_E10_)
33563	**Lagerung, Lenker, Control Arm-/Trailing Arm Bush, Suspension, bras de liaison**
	TOYOTA AVENSIS Combi (T25),AVENSIS Liftback (_T22_),AVENSIS Station Wagon (_T22_),AVENSIS Stufenheck (T25),AVENSIS (_T22_),AVENSIS (T25),AVENSIS VERSO (AC_)
33564	**Lagerung, Lenker, Control Arm-/Trailing Arm Bush, Suspension, bras de liaison**
	TOYOTA CARINA E Sportswagon (_T19_),CARINA E Stufenheck (_T19_),CARINA E (_T19_),CARINA II Station Wagon (_T17_),CARINA II Stufenheck (_T17_),CARINA II (_T17_),CELICA Cabriolet (_T16_),CELICA Cabriolet (_T18_),CELICA Coupe (T16F),CELICA Coupe (_T18_),CELICA Liftback (T16),CELICA (ST16_),COROLLA Compact (_E10_),COROLLA Compact (_E11_),COROLLA Compact (_E9_),COROLLA (_E10_),COROLLA (_E11_),COROLLA (_E9_),COROLLA Liftback (_E10_),COROLLA Liftback (_E11_),COROLLA Liftback (_E9_),COROLLA Station Wagon (_E9_),COROLLA Wagon (_E10_),COROLLA Wagon (__E11_)
33565	**Lagerung, Lenker, Control Arm-/Trailing Arm Bush, Suspension, bras de liaison**
	TOYOTA AVENSIS Combi (T25),AVENSIS Liftback (_T22_),AVENSIS Station Wagon (_T22_),AVENSIS Stufenheck (T25),AVENSIS (_T22_),AVENSIS (T25),AVENSIS VERSO (AC_)
33566	**Lagerung, Lenker, Control Arm-/Trailing Arm Bush, Suspension, bras de liaison**
	TOYOTA AVENSIS Combi (T25),AVENSIS Liftback (_T22_),AVENSIS Station Wagon (_T22_),AVENSIS Stufenheck (T25),AVENSIS (_T22_),AVENSIS (T25),AVENSIS VERSO (AC_)
33570	**Lagerung, Lenker, Control Arm-/Trailing Arm Bush, Suspension, bras de liaison**
	DAEWOO NUBIRA (KLAJ),NUBIRA Stufenheck (KLAJ),NUBIRA Wagon (KLAJ)
33571	**Lagerung, Lenker, Control Arm-/Trailing Arm Bush, Suspension, bras de liaison**
	DAEWOO NUBIRA (KLAJ),NUBIRA Stufenheck (KLAJ),NUBIRA Wagon (KLAJ)
33572	**Lagerung, Lenker, Control Arm-/Trailing Arm Bush, Suspension, bras de liaison**
	HYUNDAI GETZ (TB)
33573	**Lagerung, Lenker, Control Arm-/Trailing Arm Bush, Suspension, bras de liaison**
	HYUNDAI GETZ (TB)
33574	**Lagerung, Lenker, Control Arm-/Trailing Arm Bush, Suspension, bras de liaison**
	CHEVROLET AVEO Schrägheck,AVEO Stufenheck,KALOS,KALOS Stufenheck,DAEWOO KALOS (KLAS),KALOS Stufenheck (KLAS)
33575	**Lagerung, Lenker, Control Arm-/Trailing Arm Bush, Suspension, bras de liaison**
	CHEVROLET AVEO Schrägheck,AVEO Stufenheck,KALOS,KALOS Stufenheck,DAEWOO KALOS (KLAS),KALOS Stufenheck (KLAS)
33576	**Lagerung, Lenker, Control Arm-/Trailing Arm Bush, Suspension, bras de liaison**
	OPEL AGILA,SUZUKI SPLASH,SWIFT III (SG),VAUXHALL AGILA
33577	**Lagerung, Lenker, Control Arm-/Trailing Arm Bush, Suspension, bras de liaison**
	OPEL AGILA,SUZUKI SWIFT III (SG),VAUXHALL AGILA
33608	**Lagerung, Lenker, Control Arm-/Trailing Arm Bush, Suspension, bras de liaison**
	FORD FIESTA I (GFBT)
33609	**Lagerung, Lenker, Control Arm-/Trailing Arm Bush, Suspension, bras de liaison**
	FORD ESCORT III Cabriolet (ALD),ESCORT III (GAA),ESCORT III Kombi (AWA),ESCORT IV Cabriolet (ALF),ESCORT IV (GAF, AWF, ABFT),ESCORT IV Kombi (AWF, AVF),ESCORT ´86 Express (AVF),FIESTA I (GFBT),FIESTA II (FBD),ORION I (AFD),ORION II (AFF)
33610	**Lagerung, Lenker, Control Arm-/Trailing Arm Bush, Suspension, bras de liaison**
	FORD ESCORT III Cabriolet (ALD),ESCORT III (GAA),ESCORT III Kombi (AWA),ESCORT ´81 Express (AVA),ORION I (AFD),ORION II (AFF)
33611	**Lagerung, Lenker, Control Arm-/Trailing Arm Bush, Suspension, bras de liaison**
	FORD ESCORT III Cabriolet (ALD),ESCORT III (GAA),ESCORT III Kombi (AWA),ESCORT IV Cabriolet (ALF),ESCORT IV (GAF, AWF, ABFT),ESCORT IV Kombi (AWF, AVF),ESCORT ´86 Express (AVF),ORION I (AFD),ORION II (AFF)
33614	**Lagerung, Lenker, Control Arm-/Trailing Arm Bush, Suspension, bras de liaison**
	FORD COURIER Kasten (F3L, F5L),ESCORT CLASSIC (AAL, ABL),ESCORT CLASSIC Turnier (ANL),ESCORT V Cabriolet (ALL),ESCORT V (GAL),ESCORT V Kombi (GAL, AVL),ESCORT VI Cabriolet (ALL),ESCORT VI (GAL),ESCORT VI Kombi (GAL),ESCORT VI Stufenheck (GAL),ESCORT VII Cabriolet (ALL),ESCORT VII (GAL, AAL, ABL),ESCORT VII Kombi (GAL, ANL),ESCORT VII Stufenheck (GAL, AFL),ESCORT ´91 Express (AVL),ESCORT ´95 Express (AVL),FIESTA III (GFJ),KA (RB_),ORION III (GAL)
33615	**Lagerung, Lenker, Control Arm-/Trailing Arm Bush, Suspension, bras de liaison**
	FORD COURIER Kasten (F3L, F5L),ESCORT CLASSIC (AAL, ABL),ESCORT CLASSIC Turnier (ANL),ESCORT V Cabriolet (ALL),ESCORT V (GAL),ESCORT V Kombi (GAL, AVL),ESCORT VI Cabriolet (ALL),ESCORT VI (GAL),ESCORT VI Kombi (GAL),ESCORT VI Stufenheck (GAL),ESCORT VII Cabriolet (ALL),ESCORT VII (GAL, AAL, ABL),ESCORT VII Kombi (GAL, ANL),ESCORT VII Stufenheck (GAL, AFL),ESCORT ´91 Express (AVL),ESCORT ´95 Express (AVL),FIESTA III (GFJ),FIESTA Kasten (JV_),KA (RB_),ORION III (GAL)
33616	**Lagerung, Lenker, Control Arm-/Trailing Arm Bush, Suspension, bras de liaison**
	FORD MONDEO I (GBP),MONDEO I Kombi (BNP),MONDEO I Stufenheck (GBP),MONDEO II (BAP),MONDEO II Kombi (BNP),MONDEO II Stufenheck (BFP)
33616/7	**Lagerung, Lenker, Control Arm-/Trailing Arm Bush, Suspension, bras de liaison**
	FORD MONDEO I (GBP),MONDEO I Kombi (BNP),MONDEO I Stufenheck (GBP)
33616/8	**Lagerung, Lenker, Control Arm-/Trailing Arm Bush, Suspension, bras de liaison**
	FORD MONDEO II (BAP),MONDEO II Kombi (BNP),MONDEO II Stufenheck (BFP)
33617	**Lagerung, Lenker, Control Arm-/Trailing Arm Bush, Suspension, bras de liaison**
	FORD MONDEO I (GBP),MONDEO I Kombi (BNP),MONDEO I Stufenheck (GBP)
33618	**Lagerung, Lenker, Control Arm-/Trailing Arm Bush, Suspension, bras de liaison**
	FORD MONDEO II (BAP),MONDEO II Kombi (BNP),MONDEO II Stufenheck (BFP)

33627 **Lagerung, Lenker, Control Arm-/Trailing Arm Bush, Suspension, bras de liaison**

FORD SCORPIO I (GAE, GGE),SCORPIO I Kombi (GGE),SCORPIO I Stufenheck (GGE),SIERRA (GBG, GB4),SIERRA Kombi (BNC),SIERRA Kombi (BNG),SIERRA Schrägheck (GBC),SIERRA Schrägheck (GBC, GBG)

33628 **Lagerung, Stabilisator, Anti-roll Bar Bush Kit, Suspension, stabilisateur**

FORD COURIER Kasten (F3L, F5L),COURIER Kasten (J5_, J3_),ESCORT CLASSIC (AAL, ABL),ESCORT CLASSIC Turnier (ANL),ESCORT IV Cabriolet (ALF),ESCORT V Cabriolet (ALL),ESCORT V (GAL),ESCORT V Kombi (GAL, AVL),ESCORT VI Cabriolet (ALL),ESCORT VI (GAL),ESCORT VI Kombi (GAL),ESCORT VI Stufenheck (GAL),ESCORT VII Cabriolet (ALL),ESCORT VII (GAL, AAL, ABL),ESCORT VII Kombi (GAL, ANL),ESCORT VII Stufenheck (GAL, AFL),ESCORT ´91 Express (AVL),ESCORT ´95 Express (AVL),FIESTA III (GFJ),FIESTA IV (JA_, JB_),FIESTA Kasten (JV_),ORION III (GAL),PUMA (EC_),MAZDA 121 III (JASM, JBSM)

33628/2 **Lagerung, Stabilisator, Anti-roll Bar Bush Kit, Suspension, stabilisateur**

FORD COURIER Kasten (F3L, F5L),COURIER Kasten (J5_, J3_),ESCORT V Cabriolet (ALL),ESCORT V (GAL),ESCORT V Kombi (GAL, AVL),ESCORT VI Cabriolet (ALL),ESCORT VI (GAL),ESCORT VI Kombi (GAL),ESCORT VI Stufenheck (GAL),ESCORT VII Cabriolet (ALL),ESCORT VII (GAL, AAL, ABL),ESCORT VII Kombi (GAL, ANL),ESCORT VII Stufenheck (GAL, AFL),ESCORT ´91 Express (AVL),ESCORT ´95 Express (AVL),FIESTA III (GFJ),FIESTA IV (JA_, JB_),FIESTA V (JH_, JD_),ORION III (GAL),PUMA (EC_),MAZDA 121 III (JASM, JBSM)

33629/2 **Lagerung, Stabilisator, Anti-roll Bar Bush Kit, Suspension, stabilisateur**

FORD COUGAR (EC_),MONDEO I (GBP),MONDEO I Kombi (BNP),MONDEO I Stufenheck (GBP),MONDEO II (BAP),MONDEO II Kombi (BNP),MONDEO II Stufenheck (BFP)

33630 **Lagerung, Stabilisator, Anti-roll Bar Bush Kit, Suspension, stabilisateur**

FORD MONDEO I (GBP),MONDEO I Kombi (BNP),MONDEO I Stufenheck (GBP),MONDEO II (BAP),MONDEO II Stufenheck (BFP)

33631 **Lagerung, Stabilisator, Anti-roll Bar Bush Kit, Suspension, stabilisateur**

FORD MONDEO I (GBP),MONDEO I Kombi (BNP),MONDEO I Stufenheck (GBP),MONDEO II (BAP),MONDEO II Kombi (BNP),MONDEO II Stufenheck (BFP)

33632 **Stange/Strebe, Stabilisator, Link Stabiliser, Entretoise/tige, stabilisateur**

FORD COUGAR (EC_),MONDEO I (GBP),MONDEO I Kombi (BNP),MONDEO I Stufenheck (GBP),MONDEO II (BAP),MONDEO II Kombi (BNP),MONDEO II Stufenheck (BFP)

33632/1 **Stange/Strebe, Stabilisator, Link Stabiliser, Entretoise/tige, stabilisateur**

FORD COUGAR (EC_),MONDEO I (GBP),MONDEO I Kombi (BNP),MONDEO I Stufenheck (GBP),MONDEO II (BAP),MONDEO II Kombi (BNP),MONDEO II Stufenheck (BFP)

33633 **Stange/Strebe, Stabilisator, Link Stabiliser, Entretoise/tige, stabilisateur**

FORD MONDEO I (GBP),MONDEO I Kombi (BNP),MONDEO I Stufenheck (GBP)

33633/1 **Stange/Strebe, Stabilisator, Link Stabiliser, Entretoise/tige, stabilisateur**

FORD MONDEO I (GBP),MONDEO I Kombi (BNP),MONDEO I Stufenheck (GBP)

33634 **Lagerung, Stabilisator, Anti-roll Bar Bush Kit, Suspension, stabilisateur**

FORD COUGAR (EC_),MONDEO I (GBP),MONDEO I Kombi (BNP),MONDEO I Stufenheck (GBP),MONDEO II (BAP),MONDEO II Kombi (BNP)

33635 **Lagerung, Lenker, Control Arm-/Trailing Arm Bush, Suspension, bras de liaison**

FORD COURIER Kasten (J5_, J3_),FIESTA IV (JA_, JB_),FIESTA Kasten (JV_),PUMA (EC_),MAZDA 121 III (JASM, JBSM)

33636 **Lagerung, Lenker, Control Arm-/Trailing Arm Bush, Suspension, bras de liaison**

FORD COURIER Kasten (J5_, J3_),FIESTA IV (JA_, JB_),FIESTA Kasten (JV_),PUMA (EC_),MAZDA 121 III (JASM, JBSM)

33637 **Lagerung, Lenker, Control Arm-/Trailing Arm Bush, Suspension, bras de liaison**

BMW 5 (E28)

33637/2 **Reparatursatz, Lenker, Repair Kit, link, Kit de remise en état, bras de liaison**

BMW 5 (E28),6 (E24)

33638 **Lagerung, Lenker, Control Arm-/Trailing Arm Bush, Suspension, bras de liaison**

BMW 5 (E34),5 Touring (E34),7 (E32)

33639 **Lagerung, Lenker, Control Arm-/Trailing Arm Bush, Suspension, bras de liaison**

BMW 5 (E34),5 Touring (E34)

33641 **Lagerung, Lenker, Control Arm-/Trailing Arm Bush, Suspension, bras de liaison**

BMW 5 (E28)

33641/2 **Reparatursatz, Lenker, Repair Kit, link, Kit de remise en état, bras de liaison**

BMW 5 (E28)

33642 **Lagerung, Achskörper, Hub Carrier Bush, Suspension, corps de l'essieu**

FORD ESCORT CLASSIC (AAL, ABL),ESCORT CLASSIC Turnier (ANL),ESCORT VII Cabriolet (ALL),ESCORT VII (GAL, AAL, ABL),ESCORT VII Kombi (GAL, ANL),ESCORT VII Stufenheck (GAL, AFL),ESCORT ´95 Express (AVL)

33643 **Lagerung, Achskörper, Hub Carrier Bush, Suspension, corps de l'essieu**

FORD COURIER Kasten (J5_, J3_),FIESTA IV (JA_, JB_),MAZDA 121 III (JASM, JBSM)

33644 **Lagerung, Stabilisator, Anti-roll Bar Bush Kit, Suspension, stabilisateur**

FORD FOCUS (DAW, DBW),FOCUS Kombi (DNW),FOCUS Stufenheck (DFW)

33645 **Lagerung, Achskörper, Hub Carrier Bush, Suspension, corps de l'essieu**

FORD SCORPIO I (GAE, GGE),SCORPIO I Kombi (GGE),SCORPIO I Stufenheck (GGE),SIERRA (GBG, GB4),SIERRA Kombi (BNC),SIERRA Kombi (BNG),SIERRA Schrägheck (GBC),SIERRA Schrägheck (GBC, GBG)

33646 **Lagerung, Lenker, Control Arm-/Trailing Arm Bush, Suspension, bras de liaison**

FORD MONDEO III (B5Y),MONDEO III Kombi (BWY),MONDEO III Stufenheck (B4Y),JAGUAR X-TYPE (CF1),X-TYPE Estate

33646/7 **Reparatursatz, Lenker, Repair Kit, link, Kit de remise en état, bras de liaison**

FORD MONDEO III (B5Y),MONDEO III Kombi (BWY),MONDEO III Stufenheck (B4Y),JAGUAR X-TYPE (CF1),X-TYPE Estate

33647 **Lagerung, Lenker, Control Arm-/Trailing Arm Bush, Suspension, bras de liaison**

FORD MONDEO III (B5Y),MONDEO III Kombi (BWY),MONDEO III Stufenheck (B4Y),JAGUAR X-TYPE (CF1),X-TYPE Estate

33666 **Lagerung, Lenker, Control Arm-/Trailing Arm Bush, Suspension, bras de liaison**

BMW 7 (E32),8 (E31)

33670 **Lagerung, Stabilisator, Anti-roll Bar Bush Kit, Suspension, stabilisateur**

FORD COURIER Kasten (J5_, J3_),FIESTA IV (JA_, JB_),KA (RB_)

33671 **Lagerung, Stabilisator, Anti-roll Bar Bush Kit, Suspension, stabilisateur**

FORD FOCUS (DAW, DBW),FOCUS Kombi (DNW),FOCUS Stufenheck (DFW)

33672 **Lagerung, Lenker, Control Arm-/Trailing Arm Bush, Suspension, bras de liaison**

FORD TRANSIT Bus (E_ _),TRANSIT Bus (T_ _),TRANSIT Kasten (E_ _),TRANSIT Kasten (T_ _),TRANSIT Pritsche/Fahrgestell (E_ _),TRANSIT Pritsche/Fahrgestell (T_ _)

33673 **Lagerung, Stabilisator, Anti-roll Bar Bush Kit, Suspension, stabilisateur**

FORD TRANSIT Bus (E_ _),TRANSIT Kasten (E_ _),TRANSIT Pritsche/Fahrgestell (E_ _)

33674 **Lagerung, Stabilisator, Anti-roll Bar Bush Kit, Suspension, stabilisateur**

FORD TRANSIT Bus (E_ _),TRANSIT Bus (FD_ _, FB_ _, FS_ _, FZ_ _, FC_ _),TRANSIT Kasten (FA_ _),TRANSIT Pritsche/Fahrgestell (E_ _),TRANSIT Pritsche/Fahrgestell (FM_ _, FN_ _)

33675 **Lagerung, Lenker, Control Arm-/Trailing Arm Bush, Suspension, bras de liaison**

FORD TRANSIT Bus (E_ _),TRANSIT Bus (T_ _),TRANSIT Kasten (E_ _),TRANSIT Kasten (T_ _),TRANSIT Pritsche/Fahrgestell (E_ _),TRANSIT Pritsche/Fahrgestell (T_ _)

33676 **Lagerung, Lenker, Control Arm-/Trailing Arm Bush, Suspension, bras de liaison**

FORD FOCUS (DAW, DBW),FOCUS Kombi (DNW),FOCUS Stufenheck (DFW)

33677 **Lagerung, Lenker, Control Arm-/Trailing Arm Bush, Suspension, bras de liaison**

FORD ESCORT VI (GAL),ESCORT VII (GAL, AAL, ABL),FIESTA Kasten (FVD),SCORPIO I (GAE, GGE),SCORPIO I Kombi (GGE),SCORPIO I Stufenheck (GGE),SIERRA (GBG, GB4),SIERRA Kombi (BNG),SIERRA Schrägheck (GBC),SIERRA Schrägheck (GBC, GBG)

33678 **Lagerung, Lenker, Control Arm-/Trailing Arm Bush, Suspension, bras de liaison**

FORD C-MAX,FOCUS C-MAX,FOCUS (DAW, DBW),FOCUS II Cabriolet,FOCUS II (DA_),FOCUS II Turnier (DAW_),FOCUS Kombi (DNW),FOCUS Stufenheck (DFW),KUGA,VOLVO C30,C70 II Cabriolet,S40 II (MS),V50 (MW)

33689 **Lagerung, Achskörper, Hub Carrier Bush, Suspension, corps de l'essieu**

BMW 3 Cabriolet (E30),3 (E30),3 Touring (E30)

33690 **Lagerung, Achskörper, Hub Carrier Bush, Suspension, corps de l'essieu**

BMW 5 (E28),5 (E34),5 (E39),5 Touring (E34),7 (E32)

33690/2 **Reparatursatz, Achskörper, Repair Kit, axle body, Kit de réparation, corps de l'essieu**

BMW 5 (E34),5 (E39),5 Touring (E34),7 (E32)

33691 **Lagerung, Lenker, Control Arm-/Trailing Arm Bush, Suspension, bras de liaison**

BMW X5 (E53),5 (E28),5 (E34),5 (E39),5 Touring (E34),6 (E24),7 (E32),8 (E31)

33692 **Lagerung, Achskörper, Hub Carrier Bush, Suspension, corps de l'essieu**

BMW 3 Cabriolet (E36),3 Coupe (E36),3 (E36),3 Touring (E36)

33692/2 **Lagerung, Achskörper, Hub Carrier Bush, Suspension, corps de l'essieu**

BMW 3 Cabriolet (E36),3 Coupe (E36),3 (E36),3 Touring (E36)

33693 **Lagerung, Achskörper, Hub Carrier Bush, Suspension, corps de l'essieu**

BMW 3 Cabriolet (E36),3 Coupe (E36),3 (E36),3 Touring (E36)

33693/2 **Lagerung, Achskörper, Hub Carrier Bush, Suspension, corps de l'essieu**

BMW 3 Cabriolet (E36),3 Coupe (E36),3 (E36),3 Touring (E36)

33694 **Lagerung, Achskörper, Hub Carrier Bush, Suspension, corps de l'essieu**

BMW 5 (E28),5 (E34),5 (E39),5 Touring (E34),7 (E32)

33694/2 **Lagerung, Achskörper, Hub Carrier Bush, Suspension, corps de l'essieu**

BMW 5 (E34),5 Touring (E34),7 (E32)

33695 **Lagerung, Achskörper, Hub Carrier Bush, Suspension, corps de l'essieu**

BMW 5 (E28),6 (E24),7 (E23)

33695/2 **Reparatursatz, Achskörper, Repair Kit, axle body, Kit de réparation, corps de l'essieu**

BMW 5 (E28),6 (E24),7 (E23)

33697 **Lagerung, Stabilisator, Anti-roll Bar Bush Kit, Suspension, stabilisateur**

BMW 5 (E34),5 Touring (E34)

33714 **Lagerung, Lenker, Control Arm-/Trailing Arm Bush, Suspension, bras de liaison**

OPEL ASTRA F Cabriolet (53_B),ASTRA F Caravan (51_, 52_),ASTRA F CC (53_, 54_, 58_, 59_),ASTRA F CLASSIC Caravan,ASTRA F CLASSIC CC,ASTRA F CLASSIC Stufenheck,ASTRA F Van (55_),ASTRA F (56_, 57_),CALIBRA A (85_),VECTRA A CC (88_, 89_),VECTRA A (86_, 87_),VAUXHALL ASTRA Mk III,ASTRA Mk III CC,ASTRA Mk III Convertible,ASTRA Mk III Estate,ASTRAVAN Mk III,CALIBRA,CAVALIER Mk III CC,CAVALIER Mk III (87)

33714/2 **Reparatursatz, Lenker, Repair Kit, link, Kit de remise en état, bras de liaison**

OPEL ASTRA F Cabriolet (53_B),ASTRA F Caravan (51_, 52_),ASTRA F CC (53_, 54_, 58_, 59_),ASTRA F CLASSIC Caravan,ASTRA F CLASSIC CC,ASTRA F CLASSIC Stufenheck,ASTRA F Van (55_),ASTRA F (56_, 57_),CALIBRA A (85_),VECTRA A CC (88_, 89_),VECTRA A (86_, 87_),VAUXHALL ASTRA Mk III,ASTRA Mk III CC,ASTRA Mk III Convertible,ASTRA Mk III Estate,CALIBRA,CAVALIER Mk III CC,CAVALIER Mk III (87)

33714/9 **Hülse, Querlenkerlagerung, Sleeve, control arm mounting, Manchon, fixation du bras transversal**

OPEL ASTRA F Cabriolet (53_B),ASTRA F Caravan (51_, 52_),ASTRA F CC (53_, 54_, 58_, 59_),ASTRA F CLASSIC Caravan,ASTRA F (56_, 57_),CALIBRA A (85_),VECTRA A CC (88_, 89_),VECTRA A (86_, 87_),SAAB 900 II,900 II Cabriolet,900 II Coupe,9-3 Cabriolet (YS3D),9-3 (YS3D),9-3 (YS3F),VAUXHALL ASTRA Mk II Convertible,ASTRA Mk III,ASTRA Mk III CC,ASTRA Mk III Convertible,ASTRA Mk III Estate,ASTRAVAN Mk III,CALIBRA,CARLTON Mk III,CAVALIER Mk III CC,CAVALIER Mk III (87)

33715 **Lagerung, Lenker, Control Arm-/Trailing Arm Bush, Suspension, bras de liaison**

OPEL OMEGA A Caravan (66_, 67_),OMEGA A (16_, 17_, 19_),OMEGA B Caravan (21_, 22_, 23_),OMEGA B (25_, 26_, 27_),SENATOR B (29_),VAUXHALL SENATOR Mk II

33716 **Lagerung, Lenker, Control Arm-/Trailing Arm Bush, Suspension, bras de liaison**

OPEL OMEGA A Caravan (66_, 67_),OMEGA A (16_, 17_, 19_),SENATOR B (29_),VAUXHALL SENATOR Mk II

33717 **Buchse, Lenkstockhebel, Bush, steering control arm, Douille, levier de direction**

OPEL OMEGA A Caravan (66_, 67_),OMEGA A (16_, 17_, 19_),SENATOR B (29_),VAUXHALL CARLTON Mk III,CARLTON Mk III Estate,SENATOR Mk II

33720 **Lagerung, Lenker, Control Arm-/Trailing Arm Bush, Suspension, bras de liaison**

OPEL VECTRA B Caravan (31_),VECTRA B CC (38_),VECTRA B (36_)

33725 **Lagerung, Lenker, Control Arm-/Trailing Arm Bush, Suspension, bras de liaison**

OPEL ASTRA F Cabriolet (53_B),ASTRA F Caravan (51_, 52_),ASTRA F CC (53_, 54_, 58_, 59_),ASTRA F CLASSIC Caravan,ASTRA F CLASSIC CC,ASTRA F CLASSIC Stufenheck,ASTRA F Van (55_),ASTRA F (56_, 57_),CALIBRA A (85_),VECTRA A CC (88_, 89_),VECTRA A (86_, 87_),VAUXHALL CALIBRA

33726 **Stange/Strebe, Stabilisator, Link Stabiliser, Entretoise/tige, stabilisateur**

OPEL ASTRA F Cabriolet (53_B),ASTRA F Caravan (51_, 52_),ASTRA F CC (53_, 54_, 58_, 59_),ASTRA F Van (55_),ASTRA F (56_, 57_),CALIBRA A (85_),VECTRA A CC (88_, 89_),VECTRA A (86_, 87_)

33727 **Stange/Strebe, Stabilisator, Link Stabiliser, Entretoise/tige, stabilisateur**

OPEL ASTRA F Cabriolet (53_B),ASTRA F Caravan (51_, 52_),ASTRA F CC (53_, 54_, 58_, 59_),ASTRA F Van (55_),ASTRA F (56_, 57_),CALIBRA A (85_),VECTRA A CC (88_, 89_),VECTRA A (86_, 87_)

33728 **Reparatursatz, Stabilisatorkoppelstange, Anti-roll Bar Stabiliser Kit, Kit de réparation, barre de couplage stabilisatrice**

OPEL ASTRA F Cabriolet (53_B),ASTRA F Caravan (51_, 52_),ASTRA F CC (53_, 54_, 58_, 59_),ASTRA F CLASSIC Caravan,ASTRA F CLASSIC CC,ASTRA F CLASSIC Stufenheck,ASTRA F Van (55_),ASTRA F (56_, 57_),CALIBRA A (85_),KADETT B Coupe,VECTRA A CC (88_, 89_),VECTRA A (86_, 87_),SAAB 900 II,900 II Cabriolet,900 II Coupe,9-3 Cabriolet (YS3D),9-3 (YS3D),VAUXHALL ASTRA Mk III,ASTRA Mk III CC,ASTRA Mk III Convertible,ASTRA Mk III Estate,CALIBRA,CAVALIER Mk III CC,CAVALIER Mk III (87)

33729 **Lagerung, Stabilisator, Anti-roll Bar Bush Kit, Suspension, stabilisateur**

OPEL ASTRA F Cabriolet (53_B),ASTRA F Caravan (51_, 52_),ASTRA F CC (53_, 54_, 58_, 59_),ASTRA F Van (55_),ASTRA F (56_, 57_),CALIBRA A (85_),VECTRA A CC (88_, 89_),VECTRA A (86_, 87_)

33730 **Lagerung, Stabilisator, Anti-roll Bar Bush Kit, Suspension, stabilisateur**

OPEL OMEGA A Caravan (66_, 67_),OMEGA A (16_, 17_, 19_),SENATOR B (29_)

33731 **Lagerung, Lenker, Control Arm-/Trailing Arm Bush, Suspension, bras de liaison**

OPEL VECTRA B Caravan (31_),VECTRA B CC (38_),VECTRA B (36_),VAUXHALL VECTRA,VECTRA CC,VECTRA Estate

33732 **Lagerung, Lenker, Control Arm-/Trailing Arm Bush, Suspension, bras de liaison**

OPEL VECTRA B Caravan (31_),VECTRA B CC (38_),VECTRA B (36_),VAUXHALL VECTRA,VECTRA CC,VECTRA Estate

33733 **Lagerung, Lenker, Control Arm-/Trailing Arm Bush, Suspension, bras de liaison**

OPEL COMBO (71_),CORSA A CC (93_, 94_, 98_, 99_),CORSA A Kasten,CORSA A TR (91_, 92_, 96_, 97_),CORSA B Kasten (73_),CORSA B (73_, 78_, 79_),VAUXHALL CORSA,CORSA Convertible,CORSA Mk II,CORSAVAN

33734 **Lagerung, Lenker, Control Arm-/Trailing Arm Bush, Suspension, bras de liaison**

OPEL COMBO (71_),CORSA B Kasten (73_),CORSA B (73_, 78_, 79_)

33735 **Lagerung, Stabilisator, Anti-roll Bar Bush Kit, Suspension, stabilisateur**

OPEL COMBO (71_),CORSA A CC (93_, 94_, 98_, 99_),CORSA A Kasten,CORSA A TR (91_, 92_, 96_, 97_),CORSA B Kasten (73_),CORSA B (73_, 78_, 79_),VAUXHALL COMBO,CORSA,CORSAVAN

33736 **Lagerung, Achsstrebe, Tie Bar Bush, Suspension, jambe d'essieu**

OPEL VECTRA B CC (38_),VECTRA B (36_)

33737 **Lagerung, Achsstrebe, Tie Bar Bush, Suspension, jambe d'essieu**

OPEL CORSA A CC (93_, 94_, 98_, 99_),CORSA A TR (91_, 92_, 96_, 97_),CORSA B (73_, 78_, 79_),TIGRA (95_)

33739 **Lagerung, Stabilisatorkoppelstange, Mounting, stabilizer coupling rod, Suspension, barre de couplage stabilisatrice**

OPEL CALIBRA A (85_),OMEGA A Caravan (66_, 67_),OMEGA A (16_, 17_, 19_),OMEGA B Caravan (21_, 22_, 23_),OMEGA B (25_, 26_, 27_),SENATOR B (29_),VECTRA A CC (88_, 89_),VECTRA A (86_, 87_),VECTRA B Caravan (31_),VECTRA B CC (38_),VECTRA B (36_),VAUXHALL CALIBRA,CARLTON Mk II Estate,CARLTON Mk III,CARLTON Mk III Estate,CAVALIER Mk III CC,CAVALIER Mk III (87),SENATOR Mk II,VECTRA,VECTRA CC,VECTRA Estate

33740 **Lagerung, Stabilisatorkoppelstange, Mounting, stabilizer coupling rod, Suspension, barre de couplage stabilisatrice**

OPEL CORSA A CC (93_, 94_, 98_, 99_),CORSA A Kasten,CORSA A TR (91_, 92_, 96_, 97_)

33752 **Lagerung, Lenker, Control Arm-/Trailing Arm Bush, Suspension, bras de liaison**

DAEWOO ESPERO (KLEJ),LANOS (KLAT),LANOS Stufenheck (KLAT),NEXIA (KLETN),NEXIA Stufenheck (KLETN),OPEL KADETT D Caravan (35_, 36_, 45_, 46_),KADETT E Caravan (35_, 36_, 45_, 46_),KADETT E CC (33_, 34_, 43_, 44_),KADETT E (39_, 49_)

33753 **Lagerung, Achskörper, Hub Carrier Bush, Suspension, corps de l'essieu**

OPEL OMEGA B Caravan (21_, 22_, 23_),OMEGA B (25_, 26_, 27_)

33754 **Lagerung, Achskörper, Hub Carrier Bush, Suspension, corps de l'essieu**

OPEL CALIBRA A (85_),VECTRA A (86_, 87_)

33755 **Lagerung, Stabilisatorkoppelstange, Mounting, stabilizer coupling rod, Suspension, barre de couplage stabilisatrice**

OPEL ASTRA F Cabriolet (53_B),ASTRA F Caravan (51_, 52_),ASTRA F CC (53_, 54_, 58_, 59_),ASTRA F CLASSIC Caravan,ASTRA F CLASSIC CC,ASTRA F CLASSIC Stufenheck,ASTRA F Van (55_),ASTRA F (56_, 57_)

33756 **Lagerung, Achskörper, Hub Carrier Bush, Suspension, corps de l'essieu**

OPEL VECTRA B Caravan (31_),VECTRA B CC (38_),VECTRA B (36_)

33757 **Lagerung, Lenker, Control Arm-/Trailing Arm Bush, Suspension, bras de liaison**

DAEWOO ESPERO (KLEJ),LANOS (KLAT),LANOS Stufenheck (KLAT),NEXIA (KLETN),NEXIA Stufenheck (KLETN),OPEL KADETT D Caravan (35_, 36_, 45_, 46_),KADETT D (31_-34_, 41_-44_),KADETT D (32_,37_,39, _42),KADETT E Cabriolet (43B_),KADETT E Caravan (35_, 36_, 45_, 46_),KADETT E CC (33_, 34_, 43_, 44_),KADETT E Combo (38_, 48_),KADETT E Kasten (37_, 47_),KADETT E (39_, 49_),VAUXHALL ASTRA CC,ASTRA Estate,ASTRA Mk II Belmont,ASTRA Mk II CC,ASTRA Mk II Convertible,ASTRA Mk II Estate

33758 **Lagerung, Achskörper, Hub Carrier Bush, Suspension, corps de l'essieu**

OPEL VECTRA B Caravan (31_),VECTRA B CC (38_),VECTRA B (36_)

33760 **Lagerung, Stabilisator, Anti-roll Bar Bush Kit, Suspension, stabilisateur**

OPEL VECTRA A CC (88_, 89_),VECTRA A (86_, 87_)

33761 **Lagerung, Stabilisator, Anti-roll Bar Bush Kit, Suspension, stabilisateur**

OPEL ASTRA G Cabriolet,ASTRA G Caravan (F35_),ASTRA G CC (F48_, F08_),ASTRA G Coupe (F07_),ASTRA G Kasten (F70),ASTRA G Stufenheck (F69_),CORSA A CC (93_, 94_, 98_, 99_),CORSA A TR (91_, 92_, 96_, 97_),CORSA B (73_, 78_, 79_),KADETT C,KADETT C Caravan,KADETT C City,KADETT C Coupe,KADETT D Caravan (35_, 36_, 45_, 46_),KADETT D (31_-34_, 41_-44_),KADETT E Caravan (35_, 36_, 45_, 46_),KADETT E CC (33_, 34_, 43_, 44_),KADETT E (39_, 49_),MANTA B (58_, 59_),TIGRA TwinTop

33762 **Lagerung, Achskörper, Hub Carrier Bush, Suspension, corps de l'essieu**

OPEL ASTRA G Cabriolet,ASTRA G Caravan (F35_),ASTRA G CC (F48_, F08_),ASTRA G Coupe (F07_),ASTRA G Kasten (F70),ASTRA G Stufenheck (F69_),MERIVA,ZAFIRA (F75_)

33766 **Lagerung, Achskörper, Hub Carrier Bush, Suspension, corps de l'essieu**

OPEL OMEGA B Caravan (21_, 22_, 23_),OMEGA B (25_, 26_, 27_)

33767 **Lagerung, Achskörper, Hub Carrier Bush, Suspension, corps de l'essieu**

OPEL ASTRA G Coupe (F07_),ZAFIRA (F75_),VAUXHALL ASTRA Mk IV Coupe

33768 **Lagerung, Lenker, Control Arm-/Trailing Arm Bush, Suspension, bras de liaison**

OPEL COMBO Kasten/Kombi,COMBO Tour,CORSA C (F08, F68),CORSA C Kasten (F08, W5L),MERIVA,TIGRA TwinTop,VAUXHALL COMBO,CORSA Mk II,CORSAVAN MK II,MERIVA,TIGRA TwinTop

33785 **Lagerung, Achskörper, Hub Carrier Bush, Suspension, corps de l'essieu**

DAEWOO ESPERO (KLEJ),LANOS (KLAT),LANOS Stufenheck (KLAT),NEXIA (KLETN),NEXIA Stufenheck (KLETN),OPEL ASCONA C CC (84_, 89_),ASCONA C (81_, 86_, 87_, 88_),KADETT D Caravan (35_, 36_, 45_, 46_),KADETT D (31_-34_, 41_-44_),KADETT E Caravan (35_, 36_, 45_, 46_),KADETT E CC (33_, 34_, 43_, 44_),KADETT E (39_, 49_),VECTRA A CC (88_, 89_),VECTRA A (86_, 87_)

33786 **Lagerung, Achskörper, Hub Carrier Bush, Suspension, corps de l'essieu**

OPEL ASCONA C CC (84_, 89_),ASCONA C (81_, 86_, 87_, 88_),ASTRA F Caravan (51_, 52_),ASTRA F CC (53_, 54_, 58_, 59_),ASTRA F (56_, 57_),KADETT E Caravan (35_, 36_, 45_, 46_),KADETT E CC (33_, 34_, 43_, 44_),KADETT E (39_, 49_),VECTRA A CC (88_, 89_),VECTRA A (86_, 87_)

33787 **Lagerung, Lenker, Control Arm-/Trailing Arm Bush, Suspension, bras de liaison**

OPEL CALIBRA A (85_),OMEGA A Caravan (66_, 67_),OMEGA A (16_, 17_, 19_),OMEGA B (25_, 26_, 27_),SENATOR B (29_),VECTRA A (86_, 87_)

33788 **Lagerung, Lenker, Control Arm-/Trailing Arm Bush, Suspension, bras de liaison**

OPEL ASTRA G Cabriolet,ASTRA G Caravan (F35_),ASTRA G CC (F48_, F08_),ASTRA G Coupe (F07_),ASTRA G Kasten (F70),ASTRA G Stufenheck (F69_),ASTRA H,SIGNUM,VECTRA B Caravan (31_),VECTRA B CC (38_),VECTRA B (36_),VECTRA C,VECTRA C Caravan,VECTRA C GTS,ZAFIRA (F75_),SAAB 9-3 Cabriolet (YS3F),9-3 (YS3F),9-5 Kombi (YS3E),9-5 (YS3E),VAUXHALL ASTRA Mk IV,ASTRA Mk IV CC,ASTRA MK IV Convertible,ASTRA Mk IV Coupe,ASTRA Mk IV Estate,ASTRA MK V CC,SIGNUM,VECTRA,VECTRA CC,VECTRA Estate,VECTRA Mk II,VECTRA Mk II GTS,ZAFIRA

33789 **Lagerung, Stabilisator, Anti-roll Bar Bush Kit, Suspension, stabilisateur**

OPEL ASTRA G Caravan (F35_),ASTRA G CC (F48_, F08_),ASTRA G Stufenheck (F69_),COMBO Kasten/Kombi,CORSA C (F08, F68),CORSA C Kasten (F08, W5L),VECTRA B Caravan (31_),VECTRA B CC (38_),VECTRA B (36_)

33791 **Lagerung, Stabilisator, Anti-roll Bar Bush Kit, Suspension, stabilisateur**

OPEL OMEGA A Caravan (66_, 67_),OMEGA A (16_, 17_, 19_),OMEGA B Caravan (21_, 22_, 23_),OMEGA B (25_, 26_, 27_)

33792 **Lagerung, Stabilisator, Anti-roll Bar Bush Kit, Suspension, stabilisateur**

OPEL VECTRA B CC (38_),VECTRA B (36_)

33793 **Lagerung, Lenker, Control Arm-/Trailing Arm Bush, Suspension, bras de liaison**

OPEL CORSA A CC (93_, 94_, 98_, 99_),CORSA A TR (91_, 92_, 96_, 97_)

33794 **Lagerung, Lenker, Control Arm-/Trailing Arm Bush, Suspension, bras de liaison**

OPEL ASTRA G Cabriolet,ASTRA G Caravan (F35_),ASTRA G CC (F48_, F08_),ASTRA G Coupe (F07_),ASTRA G Stufenheck (F69_),ASTRA H,ASTRA H Caravan,ZAFIRA (F75_)

33795 **Lagerung, Achskörper, Hub Carrier Bush, Suspension, corps de l'essieu**

OPEL CORSA A CC (93_, 94_, 98_, 99_),CORSA A TR (91_, 92_, 96_, 97_)

33796 **Lagerung, Lenker, Control Arm-/Trailing Arm Bush, Suspension, bras de liaison**

OPEL COMBO Kasten/Kombi,COMBO Tour,CORSA C (F08, F68),CORSA C Kasten (F08, W5L),MERIVA,VAUXHALL COMBO,CORSA Mk II,CORSAVAN MK II,MERIVA

33808 **Lagerung, Lenker, Control Arm-/Trailing Arm Bush, Suspension, bras de liaison**

AUDI A6 Avant (4A, C4),A6 (4A, C4),CABRIOLET (8G7, B4),COUPE (81, 85),COUPE (89, 8B),100 Avant (4A, C4),100 Avant (43, C2),100 Avant (44, 44Q, C3),100 (4A, C4),100 (44, 44Q, C3),200 (44, 44Q),80 Avant (8C, B4),80 (8C, B4),80 (81, 85, B2),80 (89, 89Q, 8A, B3),90 (81, 85, B2),90 (89, 89Q, 8A, B3)

33814 **Lagerung, Stabilisator, Anti-roll Bar Bush Kit, Suspension, stabilisateur**

VW TRANSPORTER T3 Bus,TRANSPORTER T3 Kasten,TRANSPORTER T3 Pritsche/Fahrgestell

33815 **Lagerung, Stabilisator, Anti-roll Bar Bush Kit, Suspension, stabilisateur**

VW LT 28-35 I Bus (281-363),LT 28-35 I Kasten (281-363),LT 28-35 I Pritsche/Fahrgestell (281-363),LT 40-55 I Kasten (291-512),LT 40-55 I Pritsche/Fahrgestell (293-909)

33818 **Lagerung, Lenker, Control Arm-/Trailing Arm Bush, Suspension, bras de liaison**

SEAT CORDOBA Schrägheck (6K2),CORDOBA Vario (6K5),CORDOBA (6K2/C2),IBIZA I (021A),IBIZA II (6K1),IBIZA III (6K1),TOLEDO I (1L),VW GOLF II (19E, 1G1),GOLF III Cabriolet (1E7),GOLF III Variant (1H5),GOLF III (1H1),GOLF IV Cabriolet (1E7),JETTA II (19E, 1G2),PASSAT Variant (3A5, 35I),PASSAT (3A2, 35I),POLO CLASSIC (6KV2),POLO Variant (6KV5),POLO (6N1),POLO (86),POLO (86C, 80),VENTO (1H2)

33818/2 **Reparatursatz, Lenker, Repair Kit, link, Kit de remise en état, bras de liaison**

SEAT CORDOBA Vario (6K5),CORDOBA (6K2/C2),IBIZA II (6K1),TOLEDO I (1L),VW CORRADO (53I),GOLF II (19E, 1G1),GOLF III Cabriolet (1E7),GOLF III Variant (1H5),GOLF III (1H1),GOLF IV Cabriolet (1E7),JETTA II (19E, 1G2),PASSAT Variant (3A5, 35I),PASSAT (3A2, 35I),POLO CLASSIC (6KV2),POLO CLASSIC (86C, 80),POLO Variant (6KV5),POLO (6N1),POLO (86),POLO (86C, 80),VENTO (1H2)

33818/9 **Hülse, Querlenkerlagerung, Sleeve, control arm mounting, Manchon, fixation du bras transversal**

SEAT CORDOBA Vario (6K5),CORDOBA (6K2/C2),IBIZA II (6K1),TOLEDO I (1L),VW CORRADO (53I),GOLF II (19E, 1G1),GOLF III Cabriolet (1E7),GOLF III Variant (1H5),GOLF III (1H1),GOLF IV Cabriolet (1E7),JETTA II (19E, 1G2),PASSAT Variant (3A5, 35I),PASSAT (3A2, 35I),POLO CLASSIC (6KV2),POLO CLASSIC (86C, 80),POLO Variant (6KV5),POLO (6N1),POLO (86),POLO (86C, 80),VENTO (1H2)

33819 **Lagerung, Lenker, Control Arm-/Trailing Arm Bush, Suspension, bras de liaison**

SEAT CORDOBA Schrägheck (6K2),CORDOBA Vario (6K5),CORDOBA (6K2/C2),IBIZA II (6K1),IBIZA III (6K1),TOLEDO I (1L),VW CORRADO (53I),GOLF II (19E, 1G1),GOLF III Cabriolet (1E7),GOLF III Variant (1H5),GOLF III (1H1),GOLF IV Cabriolet (1E7),JETTA II (19E, 1G2),PASSAT Variant (3A5, 35I),PASSAT (3A2, 35I),POLO CLASSIC (6KV2),POLO Variant (6KV5),VENTO (1H2)

33820 **Lagerung, Lenker, Control Arm-/Trailing Arm Bush, Suspension, bras de liaison**

VW CADDY I (14),GOLF I Cabriolet (155),GOLF I (17),JETTA I (16),SCIROCCO (53),SCIROCCO (53B)

33824 **Lagerung, Stabilisator, Anti-roll Bar Bush Kit, Suspension, stabilisateur**

SEAT LEON (1M1),TOLEDO II (1M2),VW BORA Kombi (1J6),BORA (1J2),GOLF IV Variant (1J5),GOLF IV (1J1),NEW BEETLE (9C1, 1C1)

33826 **Lagerung, Achskörper, Hub Carrier Bush, Suspension, corps de l'essieu**

VW PASSAT Stufenheck (32B),PASSAT Variant (32B),PASSAT (32B),SANTANA (32B)

33826/4 **Reparatursatz, Achskörper, Repair Kit, axle body, Kit de réparation, corps de l'essieu**

VW PASSAT Stufenheck (32B),PASSAT Variant (32B),PASSAT (32B),SANTANA (32B)

33827 **Lagerung, Achsstrebe, Tie Bar Bush, Suspension, jambe d'essieu**

AUDI CABRIOLET (8G7, B4),COUPE (81, 85),COUPE (89, 8B),80 Avant (8C, B4),80 (8C, B4),80 (81, 85, B2),80 (89, 89Q, 8A, B3),90 (89, 89Q, 8A, B3),VW PASSAT Stufenheck (32B),PASSAT Variant (32B),PASSAT (32B),SANTANA (32B)

33828 **Lagerung, Lenker, Control Arm-/Trailing Arm Bush, Suspension, bras de liaison**

AUDI CABRIOLET (8G7, B4),COUPE (81, 85),QUATTRO (85),100 Coupe (C1),100 (C1),80 Avant (8C, B4),80 (8C, B4),80 (81, 85, B2),80 (89, 89Q, 8A, B3),90 (81, 85, B2),90 (89, 89Q, 8A, B3),VW PASSAT Stufenheck (32B),PASSAT Variant (32B),PASSAT (32B),SANTANA (32B)

33829 **Lagerung, Achsstrebe, Tie Bar Bush, Suspension, jambe d'essieu**

AUDI CABRIOLET (8G7, B4),COUPE (81, 85),COUPE (89, 8B),QUATTRO (85),80 Avant (8C, B4),80 (8C, B4),80 (81, 85, B2),80 (89, 89Q, 8A, B3),90 (81, 85, B2),90 (89, 89Q, 8A, B3)

33830 **Lagerung, Achsträger, Mounting, axle bracket, Suspension, support d'essieu**

AUDI COUPE (81, 85),COUPE (89, 8B),QUATTRO (85),80 Avant (8C, B4),80 (8C, B4),80 (80, 82, B1),80 (81, 85, B2),80 (89, 89Q, 8A, B3),90 (89, 89Q, 8A, B3),VW PASSAT Stufenheck (32B),PASSAT Variant (32B),PASSAT Variant (33),PASSAT (32),PASSAT (32B),SANTANA (32B)

33833 **Lagerung, Achskörper, Hub Carrier Bush, Suspension, corps de l'essieu**

SEAT TOLEDO I (1L),VW CORRADO (53I),GOLF II (19E, 1G1),JETTA II (19E, 1G2)

33833/2 **Reparatursatz, Achskörper, Repair Kit, axle body, Kit de réparation, corps de l'essieu**

SEAT TOLEDO I (1L),VW CORRADO (53I),GOLF II (19E, 1G1),JETTA II (19E, 1G2)

33834 **Lagerung, Lenker, Control Arm-/Trailing Arm Bush, Suspension, bras de liaison**

SEAT AROSA (6H),VW LUPO (6X1, 6E1),POLO Kasten (6NF),POLO (6N1),POLO (6N2)

33835 **Lagerung, Lenker, Control Arm-/Trailing Arm Bush, Suspension, bras de liaison**

SEAT AROSA (6H),VW LUPO (6X1, 6E1),POLO CLASSIC (6KV2),POLO Kasten (6NF),POLO Variant (6KV5),POLO (6N1),POLO (6N2)

33836 **Lagerung, Lenker, Control Arm-/Trailing Arm Bush, Suspension, bras de liaison**

MERCEDES-BENZ C-KLASSE Kombi (S202),C-KLASSE Kombi (S203),C-KLASSE Sportcoupe (CL203),C-KLASSE (W202),C-KLASSE (W203),CLK Cabriolet (A208),CLK (C208),E-KLASSE Cabriolet (A124),E-KLASSE Coupe (C124),E-KLASSE Kombi (S124),E-KLASSE Kombi (S210),E-KLASSE (W124),E-KLASSE (W210),KOMBI Kombi (S123),KOMBI Kombi (S124),S-KLASSE Coupe (C126),S-KLASSE Coupe (C140),S-KLASSE (W126),S-KLASSE (W140),S-KLASSE (W220),Stufenheck (W123),Stufenheck (W124),190 (W201)

33837 **Lagerung, Lenker, Control Arm-/Trailing Arm Bush, Suspension, bras de liaison**

MERCEDES-BENZ C-KLASSE Kombi (S202),C-KLASSE Kombi (S203),C-KLASSE Sportcoupe (CL203),C-KLASSE (W202),C-KLASSE (W203),CLK Cabriolet (A208),CLK (C208),COUPE (C123),COUPE (C124),E-KLASSE Cabriolet (A124),E-KLASSE Coupe (C124),E-KLASSE Kombi (S124),E-KLASSE Kombi (S210),E-KLASSE (W124),E-KLASSE (W210),KOMBI Kombi (S123),KOMBI Kombi (S124),S-KLASSE Coupe (C140),S-KLASSE (W140),S-KLASSE (W220),Stufenheck (W123),Stufenheck (W124),190 (W201)

33838 **Lagerung, Lenker, Control Arm-/Trailing Arm Bush, Suspension, bras de liaison**

MERCEDES-BENZ C-KLASSE Kombi (S202),C-KLASSE Kombi (S203),C-KLASSE Sportcoupe (CL203),C-KLASSE (W202),C-KLASSE (W203),CLK Cabriolet (A208),CLK (C208),COUPE (C123),COUPE (C124),E-KLASSE Cabriolet (A124),E-KLASSE Coupe (C124),E-KLASSE Kombi (S124),E-KLASSE Kombi (S210),E-KLASSE (W124),E-KLASSE (W210),KOMBI Kombi (S123),KOMBI Kombi (S124),Stufenheck (W123),Stufenheck (W124),190 (W201)

33839 **Lagerung, Lenker, Control Arm-/Trailing Arm Bush, Suspension, bras de liaison**

AUDI ALLROAD (4BH),A4 Avant (8D5, B5),A4 (8D2, B5),A6 Avant (4B, C5),A6 (4B, C5),A8 (4D2, 4D8),FAW-AUDI A4 Stufenheck (8D2),A6 Stufenheck (C5),A6 Stufenheck (4A2, 4B2),SKODA SUPERB (3U4),SVW PASSAT Stufenheck,VW PASSAT Variant (3B5),PASSAT Variant (3B6),PASSAT (3B2),PASSAT (3B3)

33840 **Lagerung, Lenker, Control Arm-/Trailing Arm Bush, Suspension, bras de liaison**

AUDI ALLROAD (4BH),A4 Avant (8D5, B5),A4 Avant (8ED),A4 Avant (8E5, B6),A4 Cabriolet (8H7, 8HE),A4 (8D2, B5),A4 (8EC),A4 (8E2, B6),A6 Avant (4B, C5),A6 (4B, C5),A8 (4D2, 4D8),FAW-AUDI A4 Stufenheck (B6),A4 Stufenheck (B7),A4 Stufenheck (8D2),A6 Stufenheck (C5),A6 Stufenheck (4A2, 4B2),SEAT EXEO ST (3R5),EXEO (3R2),SKODA SUPERB (3U4),SVW PASSAT Stufenheck,VW PASSAT Variant (3B5),PASSAT Variant (3B6),PASSAT (3B2),PASSAT (3B3)

33841 **Lagerung, Lenker, Control Arm-/Trailing Arm Bush, Suspension, bras de liaison**

MERCEDES-BENZ CABRIOLET (A124),COUPE (C124),E-KLASSE Cabriolet (A124),E-KLASSE Coupe (C124),E-KLASSE Kombi (S124),E-KLASSE (W124),KOMBI Kombi (S124),Stufenheck (W124),190 (W201)

33841/4 **Reparatursatz, Lenker, Repair Kit, link, Kit de remise en état, bras de liaison**

MERCEDES-BENZ COUPE (C124),E-KLASSE Cabriolet (A124),E-KLASSE Coupe (C124),E-KLASSE Kombi (S124),E-KLASSE (W124),KOMBI Kombi (S124),SL (R107),SL (R129),Stufenheck (W124),190 (W201)

33842 **Lagerung, Lenker, Control Arm-/Trailing Arm Bush, Suspension, bras de liaison**

AUDI CABRIOLET (8G7, B4),COUPE (81, 85),COUPE (89, 8B),QUATTRO (85),80 Avant (8C, B4),80 (8C, B4),80 (81, 85, B2),80 (89, 89Q, 8A, B3),90 (81, 85, B2),90 (89, 89Q, 8A, B3),VW PASSAT Stufenheck (32B),PASSAT Variant (32B),PASSAT (32B),SANTANA (32B)

33843 **Lagerung, Stabilisatorkoppelstange, Mounting, stabilizer coupling rod, Suspension, barre de couplage stabilisatrice**

AUDI CABRIOLET (8G7, B4),COUPE (89, 8B),80 Avant (8C, B4),80 (8C, B4)

33844 **Lagerung, Stabilisatorkoppelstange, Mounting, stabilizer coupling rod, Suspension, barre de couplage stabilisatrice**

AUDI 80 (8C, B4),80 (80, 82, B1),80 (81, 85, B2),80 (89, 89Q, 8A, B3),90 (89, 89Q, 8A, B3),VW PASSAT Stufenheck (32B),PASSAT Variant (32B),PASSAT (32B),SANTANA (32B)

33845 **Lagerung, Stabilisator, Anti-roll Bar Bush Kit, Suspension, stabilisateur**

MERCEDES-BENZ COUPE (C124),Stufenheck (W124),190 (W201)

33846 **Lagerung, Lenker, Control Arm-/Trailing Arm Bush, Suspension, bras de liaison**

AUDI CABRIOLET (8G7, B4),COUPE (89, 8B),80 Avant (8C, B4),80 (8C, B4),90 (89, 89Q, 8A, B3)

33847 **Lagerung, Lenker, Control Arm-/Trailing Arm Bush, Suspension, bras de liaison**

ALPINA B3 Cabriolet (E36),B3 Coupe (E36),B3 (E36),B3 Kombi (E36),B6 (E36),B8 Cabriolet (E36),B8 Coupe (E36),B8 (E36),B8 Kombi (E36),BMW Z3,Z3 Coupe,3 Cabriolet (E36),3 Compact (E36),3 Coupe (E36),3 (E36),3 Touring (E36)

33847/2 **Reparatursatz, Lenker, Repair Kit, link, Kit de remise en état, bras de liaison**

BMW Z3,Z3 Coupe,3 Cabriolet (E36),3 Compact (E36),3 Coupe (E36),3 (E36),3 Touring (E36)

33848 **Lagerung, Lenker, Control Arm-/Trailing Arm Bush, Suspension, bras de liaison**

OPEL OMEGA B Caravan (21_, 22_, 23_),OMEGA B (25_, 26_, 27_),VAUXHALL OMEGA,OMEGA Estate,SENATOR Mk II

33849 **Lagerung, Lenker, Control Arm-/Trailing Arm Bush, Suspension, bras de liaison**

OPEL OMEGA B Caravan (21_, 22_, 23_),OMEGA B (25_, 26_, 27_),VAUXHALL OMEGA,OMEGA Estate

33858 **Lagerung, Achskörper, Hub Carrier Bush, Suspension, corps de l'essieu**

SEAT TOLEDO I (1L),VW CORRADO (53I),GOLF III Cabriolet (1E7),GOLF III (1H1),GOLF IV Cabriolet (1E7),VENTO (1H2)

33858/2 **Reparatursatz, Achskörper, Repair Kit, axle body, Kit de réparation, corps de l'essieu**

SEAT TOLEDO I (1L),VW CORRADO (53I),GOLF III Cabriolet (1E7),GOLF III (1H1),GOLF IV Cabriolet (1E7),VENTO (1H2)

33859 **Lagerung, Lenker, Control Arm-/Trailing Arm Bush, Suspension, bras de liaison**

VW TRANSPORTER T3 Bus,TRANSPORTER T3 Kasten,TRANSPORTER T3 Pritsche/Fahrgestell

33864 **Lagerung, Achskörper, Hub Carrier Bush, Suspension, corps de l'essieu**

FORD GALAXY (WGR),SEAT ALHAMBRA (7V8, 7V9),VW SHARAN (7M8, 7M9, 7M6)

33865 **Lagerung, Achskörper, Hub Carrier Bush, Suspension, corps de l'essieu**

MERCEDES-BENZ CABRIOLET (A124),COUPE (C124),E-KLASSE Kombi (S124),E-KLASSE (W124),KOMBI Kombi (S124),Stufenheck (W124)

33867 **Reparatursatz, Lenker, Repair Kit, link, Kit de remise en état, bras de liaison**

MERCEDES-BENZ G-KLASSE (W460),S-KLASSE Coupe (C140),S-KLASSE (W140)

33868 **Reparatursatz, Stabilisatorlager, Repair Kit, stabilizer suspension, Kit de réparation, suspension du stabilisateur**

MERCEDES-BENZ 190 (W201)

33870 **Lagerung, Radlagergehäuse, Bearing, wheel bearing housing, Roulement, boîtier du roulement des roues**

MERCEDES-BENZ CABRIOLET (A124),C-KLASSE Kombi (S202),C-KLASSE Kombi (S203),C-KLASSE Sportcoupe (CL203),C-KLASSE (W202),C-KLASSE (W203),CLK Cabriolet (A208),CLK Cabriolet (A209),CLK (C208),CLK (C209),COUPE (C124),E-KLASSE Cabriolet (A124),E-KLASSE Coupe (C124),E-KLASSE Kombi (S124),E-KLASSE Kombi (S210),E-KLASSE (W124),E-KLASSE (W210),KOMBI Kombi (S124),S-KLASSE Coupe (C140),S-KLASSE Coupe (C215),S-KLASSE (W140),S-KLASSE (W220),SL (R129),SLK (R170),SLK (R171),Stufenheck (W124),190 (W201)

33871 **Lagerung, Achskörper, Hub Carrier Bush, Suspension, corps de l'essieu**

VW PASSAT Variant (3A5, 35I),PASSAT (3A2, 35I)

33871/4 **Reparatursatz, Achskörper, Repair Kit, axle body, Kit de réparation, corps de l'essieu**

VW PASSAT Variant (3A5, 35I),PASSAT (3A2, 35I)

33872 **Lagerung, Lenker, Control Arm-/Trailing Arm Bush, Suspension, bras de liaison**

VW TRANSPORTER T4 Bus (70XB, 70XC, 7DB, 7DW),TRANSPORTER T4 Kasten (70XA),TRANSPORTER T4 Pritsche/Fahrgestell (70XD)

33874 **Lagerung, Lenker, Control Arm-/Trailing Arm Bush, Suspension, bras de liaison**

MERCEDES-BENZ 190 (W201)

33875 **Lagerung, Lenker, Control Arm-/Trailing Arm Bush, Suspension, bras de liaison**

ALPINA B3 Cabriolet (E30),B3 (E30),B3 Kombi (E30),C1 (E30),C2 Cabriolet (E30),C2 (E30),BMW 3 Cabriolet (E30),3 (E30),3 Touring (E30),5 (E28),6 (E24)

33875/1 **Lagerung, Lenker, Control Arm-/Trailing Arm Bush, Suspension, bras de liaison**

ALPINA B3 Cabriolet (E30),B3 (E30),B3 Kombi (E30),C1 (E30),C2 Cabriolet (E30),C2 (E30),BMW Z1,3 Cabriolet (E30),3 (E30),3 Touring (E30),5 (E28),5 (E34),5 Touring (E34),6 (E24)

33875/2 **Lagerung, Lenker, Control Arm-/Trailing Arm Bush, Suspension, bras de liaison**

ALPINA B3 Cabriolet (E30),B3 (E30),B3 Kombi (E30),C1 (E30),C2 Cabriolet (E30),C2 (E30),BMW 3 Cabriolet (E30),3 (E30),3 Touring (E30),5 (E28),6 (E24)

33876 **Lagerung, Lenker, Control Arm-/Trailing Arm Bush, Suspension, bras de liaison**

AUDI ALLROAD (4BH),A4 Avant (8D5, B5),A4 Avant (8ED),A4 Avant (8E5, B6),A4 Cabriolet (8H7, 8HE),A4 (8D2, B5),A4 (8EC),A4 (8E2, B6),A6 Avant (4B, C5),A6 (4B, C5),A8 (4D2, 4D8),FAW-AUDI A4 Stufenheck (B6),A4 Stufenheck (8D2),A6 Stufenheck (C5),A6 Stufenheck (4A2, 4B2),SKODA SUPERB (3U4),SVW PASSAT Stufenheck,VW PASSAT Variant (3B5),PASSAT Variant (3B6),PASSAT (3B2),PASSAT (3B3)

33877 **Lagerung, Achskörper, Hub Carrier Bush, Suspension, corps de l'essieu**

OPEL VECTRA B Caravan (31_),VECTRA B CC (38_),VECTRA B (36_)

33878 **Lagerung, Lenker, Control Arm-/Trailing Arm Bush, Suspension, bras de liaison**

AUDI A6 Avant (4A, C4),A6 (4A, C4),100 Avant (4A, C4),100 (4A, C4)

33878/2 **Reparatursatz, Lenker, Repair Kit, link, Kit de remise en état, bras de liaison**

AUDI A6 Avant (4A, C4),A6 (4A, C4),100 Avant (4A, C4),100 (4A, C4)

33878/9 **Hülse, Querlenkerlagerung, Sleeve, control arm mounting, Manchon, fixation du bras transversal**

AUDI A6 Avant (4A, C4),A6 (4A, C4),100 Avant (4A, C4),100 (4A, C4)

33879 **Lagerung, Achskörper, Hub Carrier Bush, Suspension, corps de l'essieu**

OPEL OMEGA A Caravan (66_, 67_),OMEGA A (16_, 17_, 19_),SENATOR B (29_),VECTRA A CC (88_, 89_),VECTRA A (86_, 87_)

33883 **Lagerung, Lenker, Control Arm-/Trailing Arm Bush, Suspension, bras de liaison**

MERCEDES-BENZ E-KLASSE Kombi (S211),E-KLASSE (W211)

33889/2 **Lagerung, Stabilisator, Anti-roll Bar Bush Kit, Suspension, stabilisateur**

MERCEDES-BENZ C-KLASSE Kombi (S202),C-KLASSE (W202),CLK Cabriolet (A208),COUPE (C124),E-KLASSE Coupe (C124),E-KLASSE Kombi (S210),E-KLASSE (W124),E-KLASSE (W210),SL (R129),SLK (R170),Stufenheck (W124),190 (W201)

33889/3 **Lagerung, Stabilisator, Anti-roll Bar Bush Kit, Suspension, stabilisateur**

MERCEDES-BENZ COUPE (C124),E-KLASSE (W124),Stufenheck (W124),190 (W201)

33889/4 **Reparatursatz, Stabilisatorkoppelstange, Anti-roll Bar Stabiliser Kit, Kit de réparation, barre de couplage stabilisatrice**

MERCEDES-BENZ Stufenheck (W124),190 (W201)

33890 **Reparatursatz, Lenker, Repair Kit, link, Kit de remise en état, bras de liaison**

SEAT CORDOBA (6K2/C2),IBIZA II (6K1),TOLEDO I (1L),VW CADDY II Kasten (9K9A),GOLF II (19E, 1G1),JETTA II (19E, 1G2),POLO CLASSIC (6KV2),POLO Variant (6KV5)

33891 **Lagerung, Lenker, Control Arm-/Trailing Arm Bush, Suspension, bras de liaison**

AUDI V8 (44_, 4C_),100 Avant (43, C2),100 Avant (44, 44Q, C3),100 (43, C2),100 (44, 44Q, C3),200 Avant (44, 44Q),200 (43),200 (44, 44Q)

33892 **Lagerung, Lenker, Control Arm-/Trailing Arm Bush, Suspension, bras de liaison**

AUDI A6 Avant (4A, C4),A6 (4A, C4),100 Avant (4A, C4),100 (4A, C4)

33893 **Lagerung, Lenker, Control Arm-/Trailing Arm Bush, Suspension, bras de liaison**

AUDI 50 (86),VW DERBY (86),DERBY (86C, 80),POLO CLASSIC (86C, 80),POLO Coupe (86C, 80),POLO (86),POLO (86C, 80)

33894 **Lagerung, Achskörper, Hub Carrier Bush, Suspension, corps de l'essieu**

AUDI 80 Avant (8C, B4),80 (8C, B4)

33895 **Lagerung, Lenker, Control Arm-/Trailing Arm Bush, Suspension, bras de liaison**

OPEL OMEGA A Caravan (66_, 67_),OMEGA A (16_, 17_, 19_),OMEGA B Caravan (21_, 22_, 23_),OMEGA B (25_, 26_, 27_),SENATOR B (29_),VAUXHALL SENATOR Mk II

33896 **Lagerung, Lenker, Control Arm-/Trailing Arm Bush, Suspension, bras de liaison**

VW TRANSPORTER T3 Bus,TRANSPORTER T3 Kasten,TRANSPORTER T3 Pritsche/Fahrgestell

33897 **Lagerung, Lenker, Control Arm-/Trailing Arm Bush, Suspension, bras de liaison**

VW TRANSPORTER T3 Bus,TRANSPORTER T3 Kasten,TRANSPORTER T3 Pritsche/Fahrgestell

33898 **Lagerung, Achskörper, Hub Carrier Bush, Suspension, corps de l'essieu**

AUDI 100 Avant (43, C2),100 Avant (44, 44Q, C3),100 (43, C2),100 (44, 44Q, C3),200 Avant (44, 44Q),200 (43),200 (44, 44Q)

33899 **Lagerung, Achskörper, Hub Carrier Bush, Suspension, corps de l'essieu**

AUDI A6 Avant (4A, C4),A6 (4A, C4),100 Avant (4A, C4),100 (4A, C4)

33900 **Lagerung, Lenker, Control Arm-/Trailing Arm Bush, Suspension, bras de liaison**

VW TRANSPORTER T3 Bus,TRANSPORTER T3 Kasten,TRANSPORTER T3 Pritsche/Fahrgestell

33901 **Lagerung, Lenker, Control Arm-/Trailing Arm Bush, Suspension, bras de liaison**

AUDI 100 Avant (43, C2),100 Avant (44, 44Q, C3),100 (43, C2),100 (44, 44Q, C3),200 Avant (44, 44Q),200 (43),200 (44, 44Q)

33902 **Lagerung, Achskörper, Hub Carrier Bush, Suspension, corps de l'essieu**

AUDI A4 Avant (8D5, B5),A4 (8D2, B5)

33903 **Lagerung, Lenker, Control Arm-/Trailing Arm Bush, Suspension, bras de liaison**

AUDI A3 (8L1),TT Roadster (8N9),TT (8N3),SEAT LEON (1M1),TOLEDO II (1M2),SKODA OCTAVIA Combi (1U5),OCTAVIA (1U2),VW BORA Kombi (1J6),BORA (1J2),GOLF IV Variant (1J5),GOLF IV (1J1),NEW BEETLE Cabriolet (1Y7),NEW BEETLE (9C1, 1C1)

33904 **Lagerung, Stabilisatorkoppelstange, Mounting, stabilizer coupling rod, Suspension, barre de couplage stabilisatrice**

SEAT CORDOBA Vario (6K5),CORDOBA (6K2/C2),IBIZA II (6K1),INCA (6K9),TOLEDO I (1L),VW CADDY II Kasten (9K9A),CORRADO (53I),GOLF II (19E, 1G1),GOLF III Variant (1H5),GOLF III (1H1),JETTA II (19E, 1G2),POLO CLASSIC (6KV2),POLO Variant (6KV5),VENTO (1H2)

33905 **Lagerung, Stabilisatorkoppelstange, Mounting, stabilizer coupling rod, Suspension, barre de couplage stabilisatrice**

VW CADDY II Kasten (9K9A),CORRADO (53I),GOLF II (19E, 1G1),GOLF III Cabriolet (1E7),GOLF III Variant (1H5),GOLF III (1H1),GOLF IV Cabriolet (1E7),JETTA II (19E, 1G2),POLO CLASSIC (6KV2),POLO Variant (6KV5),VENTO (1H2)

33906 **Lagerung, Stabilisator, Anti-roll Bar Bush Kit, Suspension, stabilisateur**

AUDI COUPE (81, 85),80 (80, 82, B1),80 (81, 85, B2),80 (89, 89Q, 8A, B3),90 (81, 85, B2),90 (89, 89Q, 8A, B3),VW PASSAT Stufenheck (32B),PASSAT Variant (32B),PASSAT Variant (33),PASSAT (32),PASSAT (32B),SANTANA (32B)

33907 **Lagerung, Lenker, Control Arm-/Trailing Arm Bush, Suspension, bras de liaison**

AUDI A2 (8Z0),CABRIOLET (8G7, B4),80 Avant (8C, B4),80 (8C, B4),VW PASSAT Stufenheck (32B),PASSAT Variant (32B),PASSAT (32B),SANTANA (32B)

33908 **Lagerung, Lenker, Control Arm-/Trailing Arm Bush, Suspension, bras de liaison**

FORD GALAXY (WGR),SEAT ALHAMBRA (7V8, 7V9),VW SHARAN (7M8, 7M9, 7M6)

33909 **Lagerung, Achskörper, Hub Carrier Bush, Suspension, corps de l'essieu**

VW GOLF III Variant (1H5),GOLF IV Variant (1J5)

33909/4 **Lagerung, Achskörper, Hub Carrier Bush, Suspension, corps de l'essieu**

VW GOLF III Variant (1H5),GOLF IV Variant (1J5)

33910 **Lagerung, Achskörper, Hub Carrier Bush, Suspension, corps de l'essieu**

MERCEDES-BENZ C-KLASSE Kombi (S202),C-KLASSE (W202),CLK Cabriolet (A208),CLK (C208),COUPE (C124),E-KLASSE Cabriolet (A124),E-KLASSE Coupe (C124),E-KLASSE Kombi (S124),E-KLASSE (W124),KOMBI Kombi (S124),Stufenheck (W124),190 (W201)

33912 **Lagerung, Achskörper, Hub Carrier Bush, Suspension, corps de l'essieu**

AUDI A3 (8L1),TT Roadster (8J9),TT Roadster (8N9),TT (8J3),TT (8N3),SEAT CORDOBA (6L2),IBIZA IV (6L1),LEON (1M1),LEON (1P1),TOLEDO II (1M2),TOLEDO III (5P2),SKODA FABIA Combi (6Y5),FABIA Stufenheck (6Y3),FABIA (6Y2),OCTAVIA Combi (1U5),OCTAVIA Combi (1Z5),OCTAVIA (1U2),OCTAVIA (1Z3),ROOMSTER (5J),VW BORA Kombi (1J6),BORA (1J2),GOLF IV Variant (1J5),GOLF IV (1J1),NEW BEETLE Cabriolet (1Y7),NEW BEETLE (9C1, 1C1),POLO Stufenheck,POLO (9N_)

33912/2 **Reparatursatz, Achskörper, Repair Kit, axle body, Kit de réparation, corps de l'essieu**

AUDI A3 (8L1),TT Roadster (8J9),TT Roadster (8N9),TT (8J3),TT (8N3),SEAT CORDOBA (6L2),IBIZA IV (6L1),LEON (1M1),LEON (1P1),TOLEDO II (1M2),TOLEDO III (5P2),SKODA FABIA Combi (6Y5),FABIA Praktik,FABIA Stufenheck (6Y3),FABIA (6Y2),OCTAVIA Combi (1U5),OCTAVIA Combi (1Z5),OCTAVIA (1U2),OCTAVIA (1Z3),ROOMSTER (5J),VW BORA Kombi (1J6),BORA (1J2),GOLF IV Variant (1J5),GOLF IV (1J1),NEW BEETLE Cabriolet (1Y7),NEW BEETLE (9C1, 1C1),POLO Stufenheck,POLO (9N_)

33913 **Lagerung, Lenker, Control Arm-/Trailing Arm Bush, Suspension, bras de liaison**

VW TRANSPORTER T4 Bus (70XB, 70XC, 7DB, 7DW),TRANSPORTER T4 Kasten (70XA),TRANSPORTER T4 Pritsche/Fahrgestell (70XD)

33914 **Lagerung, Lenker, Control Arm-/Trailing Arm Bush, Suspension, bras de liaison**

VW TRANSPORTER T4 Bus (70XB, 70XC, 7DB, 7DW),TRANSPORTER T4 Kasten (70XA),TRANSPORTER T4 Pritsche/Fahrgestell (70XD)

33915 **Lagerung, Lenker, Control Arm-/Trailing Arm Bush, Suspension, bras de liaison**

VW TRANSPORTER T4 Bus (70XB, 70XC, 7DB, 7DW),TRANSPORTER T4 Kasten (70XA),TRANSPORTER T4 Pritsche/Fahrgestell (70XD)

33916 **Lagerung, Lenker, Control Arm-/Trailing Arm Bush, Suspension, bras de liaison**

VW TRANSPORTER T4 Bus (70XB, 70XC, 7DB, 7DW),TRANSPORTER T4 Kasten (70XA),TRANSPORTER T4 Pritsche/Fahrgestell (70XD)

33917 **Lagerung, Achsstrebe, Tie Bar Bush, Suspension, jambe d'essieu**

VOLVO S90,V90 Kombi,740 Kombi (745),740 (744),760 Kombi (704, 765),760 (704, 764),940 II Kombi (945),940 II (944),940 Kombi (945),940 (944),960 II Kombi (965),960 II (964),960 Kombi (965),960 (964)

33922 **Reparatursatz, Umlenkhebel, Repair Kit, reversing lever, Kit d'assemblage, levier de déviation**

MERCEDES-BENZ S-KLASSE Coupe (C140),S-KLASSE (W140)

33923 **Lagerung, Lenker, Control Arm-/Trailing Arm Bush, Suspension, bras de liaison**

VOLVO V70 I Kombi (P80_),740 Kombi (745),740 (744),760 Kombi (704, 765),760 (704, 764),850 Kombi (LW),940 II Kombi (945),940 II (944),940 Kombi (945),940 (944),960 II Kombi (965),960 II (964),960 Kombi (965),960 (964)

33924 **Lagerung, Lenker, Control Arm-/Trailing Arm Bush, Suspension, bras de liaison**

MITSUBISHI CARISMA (DA_),VOLVO S40 I (VS),V40 Kombi (VW)

33925 **Lagerung, Stabilisatorkoppelstange, Mounting, stabilizer coupling rod, Suspension, barre de couplage stabilisatrice**

VW TRANSPORTER T4 Bus (70XB, 70XC, 7DB, 7DW),TRANSPORTER T4 Kasten (70XA),TRANSPORTER T4 Pritsche/Fahrgestell (70XD)

33926 **Lagerung, Stabilisatorkoppelstange, Mounting, stabilizer coupling rod, Suspension, barre de couplage stabilisatrice**

VW TRANSPORTER T4 Bus (70XB, 70XC, 7DB, 7DW),TRANSPORTER T4 Kasten (70XA),TRANSPORTER T4 Pritsche/Fahrgestell (70XD)

33927 **Lagerung, Stabilisatorkoppelstange, Mounting, stabilizer coupling rod, Suspension, barre de couplage stabilisatrice**

AUDI A3 (8L1),TT Roadster (8N9),TT (8N3),SKODA OCTAVIA Combi (1U5),OCTAVIA (1U2),OCTAVIA (1Z3),VW BORA Kombi (1J6),BORA (1J2),GOLF IV Variant (1J5),GOLF IV (1J1)

33928 **Lagerung, Lenker, Control Arm-/Trailing Arm Bush, Suspension, bras de liaison**

FORD GALAXY (WGR),SEAT ALHAMBRA (7V8, 7V9),VW SHARAN (7M8, 7M9, 7M6)

33929 **Lagerung, Lenker, Control Arm-/Trailing Arm Bush, Suspension, bras de liaison**

VW LT 28-35 I Bus (281-363),LT 28-35 I Kasten (281-363),LT 28-35 I Pritsche/Fahrgestell (281-363)

33932 **Lagerung, Lenker, Control Arm-/Trailing Arm Bush, Suspension, bras de liaison**

AUDI ALLROAD (4BH),A4 Avant (8D5, B5),A4 Avant (8ED),A4 Avant (8E5, B6),A4 Cabriolet (8H7, 8HE),A4 (8D2, B5),A4 (8EC),A4 (8E2, B6),A6 Allroad (4FH),A6 Avant (4B, C5),A6 Avant (4F5),A6 (4B, C5),A6 (4F2),A8 (4D2, 4D8),A8 (4E_),FAW-AUDI A4 Stufenheck (B6),A4 Stufenheck (8D2),A6 Stufenheck (C5),A6 Stufenheck (4A2, 4B2),SKODA SUPERB (3U4),SVW PASSAT Stufenheck,VW PASSAT Variant (3B5),PASSAT Variant (3B6),PASSAT (3B2),PASSAT (3B3),PHAETON (3D2)

33933 **Lagerung, Lenker, Control Arm-/Trailing Arm Bush, Suspension, bras de liaison**

BMW Z4 Coupe,Z4 (E85),3 Cabriolet (E46),3 Compact (E46),3 Coupe (E46),3 (E46),3 Touring (E46),BRILLIANCE BMW 3 SERIES (E46)

33933/2 **Lagerung, Lenker, Control Arm-/Trailing Arm Bush, Suspension, bras de liaison**

BMW Z4 Coupe,Z4 (E85),3 Cabriolet (E46),3 Compact (E46),3 Coupe (E46),3 (E46),3 Touring (E46),BRILLIANCE BMW 3 SERIES (E46)

33934 **Lagerung, Lenker, Control Arm-/Trailing Arm Bush, Suspension, bras de liaison**

BMW 3 Cabriolet (E36),3 Coupe (E36),3 Coupe (E46),3 (E36),3 (E46),3 Touring (E36),3 Touring (E46)

33935 **Lagerung, Stabilisator, Anti-roll Bar Bush Kit, Suspension, stabilisateur**

VW PASSAT Variant (3A5, 35I),PASSAT (3A2, 35I)

33936 **Lagerung, Lenker, Control Arm-/Trailing Arm Bush, Suspension, bras de liaison**

MERCEDES-BENZ CABRIOLET (A124),COUPE (C124),E-KLASSE Coupe (C124),E-KLASSE Kombi (S124),E-KLASSE (W124),KOMBI Kombi (S124),Stufenheck (W124),190 (W201)

33937 **Lagerung, Achskörper, Hub Carrier Bush, Suspension, corps de l'essieu**

SEAT AROSA (6H),CORDOBA Vario (6K5),CORDOBA (6K2/C2),IBIZA II (6K1),VW LUPO (6X1, 6E1),POLO CLASSIC (6KV2),POLO Variant (6KV5),POLO (6N1)

33938 **Lagerung, Stabilisator, Anti-roll Bar Bush Kit, Suspension, stabilisateur**

AUDI A6 Avant (4A, C4),A6 (4A, C4),100 Avant (4A, C4),100 (4A, C4)

33939 **Lagerung, Stabilisator, Anti-roll Bar Bush Kit, Suspension, stabilisateur**

AUDI A4 Avant (8D5, B5),A4 (8D2, B5),A8 (4D2, 4D8),FAW-AUDI A4 Stufenheck (8D2),SKODA SUPERB (3U4),SVW PASSAT Stufenheck,VW PASSAT (3B2)

33940 **Lagerung, Stabilisator, Anti-roll Bar Bush Kit, Suspension, stabilisateur**

AUDI A4 Avant (8D5, B5),A4 (8D2, B5),A6 Avant (4B, C5),A6 (4B, C5),A8 (4D2, 4D8),FAW-AUDI A6 Stufenheck (C5),A6 Stufenheck (4A2, 4B2),A6L Stufenheck (C6),SKODA SUPERB (3U4),SVW PASSAT Stufenheck,VW PASSAT Variant (3B5),PASSAT (3B2)

33941 **Lagerung, Achskörper, Hub Carrier Bush, Suspension, corps de l'essieu**

AUDI A6 Avant (4A, C4),A6 (4A, C4),V8 (44_, 4C_),100 Avant (4A, C4),100 Avant (44, 44Q, C3),100 (4A, C4),100 (44, 44Q, C3),200 Avant (44, 44Q),200 (44, 44Q),80 Avant (8C, B4),80 (8C, B4)

33942 **Lagerung, Achskörper, Hub Carrier Bush, Suspension, corps de l'essieu**

MERCEDES-BENZ CABRIOLET (A124),COUPE (C124),E-KLASSE Kombi (S124),KOMBI Kombi (S124),Stufenheck (W124)

33943 **Lagerung, Lenker, Control Arm-/Trailing Arm Bush, Suspension, bras de liaison**

MERCEDES-BENZ A-KLASSE (W168)

33944 **Lagerung, Lenker, Control Arm-/Trailing Arm Bush, Suspension, bras de liaison**

MERCEDES-BENZ A-KLASSE (W168)

33945 **Lagerung, Stabilisator, Anti-roll Bar Bush Kit, Suspension, stabilisateur**

VW LT 28-35 I Bus (281-363),LT 28-35 I Kasten (281-363),LT 28-35 I Pritsche/Fahrgestell (281-363),LT 40-55 I Kasten (291-512),LT 40-55 I Pritsche/Fahrgestell (293-909),TRANSPORTER T2 Kasten

33946 **Lagerung, Stabilisator, Anti-roll Bar Bush Kit, Suspension, stabilisateur**

MERCEDES-BENZ SPRINTER 2-t Bus (901, 902),SPRINTER 2-t Kasten (901, 902),SPRINTER 2-t Pritsche/Fahrgestell (901, 902),SPRINTER 3-t Bus (903),SPRINTER 3-t Bus (906),SPRINTER 3-t Kasten (903),SPRINTER 3-t Kasten (906),SPRINTER 3-t Pritsche/Fahrgestell (903),SPRINTER 3-t Pritsche/Fahrgestell (906),SPRINTER 3,5 Pritsche/Fahrgestell (906),SPRINTER 3,5-t Bus (906),SPRINTER 3,5-t Kasten (906),SPRINTER 4-t Kasten (904),SPRINTER 4-t Pritsche/Fahrgestell (904),SPRINTER 5-t Kasten (906),SPRINTER 5-t Pritsche/Fahrgestell (906),T1 Bus (601),T1 Bus (602),T1 Kasten (601),T1 Kasten (602),T1 Pritsche/Fahrgestell (601),T1 Pritsche/Fahrgestell (602),T1/TN,VW CRAFTER 30-35 Bus (2E),CRAFTER 30-50 Kasten (2E),CRAFTER 30-50 Pritsche/Fahrgestell (2E),LT 28-35 II Bus (2DM),LT 28-46 II Kasten (2DX0AE),LT 28-46 II Pritsche/Fahrgestell (2DX0FE)

33947 **Lagerung, Stabilisator, Anti-roll Bar Bush Kit, Suspension, stabilisateur**

MERCEDES-BENZ SPRINTER 2-t Bus (901, 902),SPRINTER 2-t Kasten (901, 902),SPRINTER 2-t Pritsche/Fahrgestell (901, 902),SPRINTER 3-t Bus (903),SPRINTER 3-t Kasten (903),SPRINTER 3-t Pritsche/Fahrgestell (903),VW LT 28-35 II Bus (2DM),LT 28-46 II Kasten (2DX0AE),LT 28-46 II Pritsche/Fahrgestell (2DX0FE)

33948 **Lagerung, Stabilisator, Anti-roll Bar Bush Kit, Suspension, stabilisateur**

VW PASSAT Variant (3A5, 35I),PASSAT (3A2, 35I)

33949 **Lagerung, Stabilisator, Anti-roll Bar Bush Kit, Suspension, stabilisateur**

VW PASSAT Variant (3A5, 35I),PASSAT (3A2, 35I)

33950 **Lagerung, Lenker, Control Arm-/Trailing Arm Bush, Suspension, bras de liaison**

SKODA FAVORIT (781)

33952 **Lagerung, Lenker, Control Arm-/Trailing Arm Bush, Suspension, bras de liaison**

SKODA FAVORIT Forman (785),FAVORIT Pick-up (787),FAVORIT (781),FELICIA I Fun (797),FELICIA I Kombi (6U5),FELICIA I (6U1),FELICIA II Kombi (6U5),FELICIA II (6U1)

33953 **Lagerung, Lenker, Control Arm-/Trailing Arm Bush, Suspension, bras de liaison**

SKODA FAVORIT Forman (785),FAVORIT Pick-up (787),FAVORIT (781),FELICIA I Fun (797),FELICIA I Kombi (6U5),FELICIA I (6U1),FELICIA II Kombi (6U5),FELICIA II (6U1)

33954 **Lagerung, Stabilisatorkoppelstange, Mounting, stabilizer coupling rod, Suspension, barre de couplage stabilisatrice**

SKODA FAVORIT (781)

33955 **Lagerung, Stabilisatorkoppelstange, Mounting, stabilizer coupling rod, Suspension, barre de couplage stabilisatrice**

SKODA FAVORIT (781)

33957 **Lagerung, Lenker, Control Arm-/Trailing Arm Bush, Suspension, bras de liaison**

SKODA FAVORIT Forman (785),FAVORIT Pick-up (787),FAVORIT (781),FELICIA I Fun (797),FELICIA I Kombi (6U5),FELICIA I (6U1),FELICIA II Kombi (6U5),FELICIA II (6U1)

33960 **Lagerung, Lenker, Control Arm-/Trailing Arm Bush, Suspension, bras de liaison**

ROVER 200 Hatchback (XW),200 (RF),400 Hatchback (RT),400 (RT),400 (XW)

33970 **Lagerung, Lenker, Control Arm-/Trailing Arm Bush, Suspension, bras de liaison**

MERCEDES-BENZ S-KLASSE Coupe (C126),S-KLASSE (W126)

33971 **Lagerung, Lenker, Control Arm-/Trailing Arm Bush, Suspension, bras de liaison**

MERCEDES-BENZ S-KLASSE Coupe (C140),S-KLASSE (W140)

33972 **Reparatursatz, Umlenkhebel, Repair Kit, reversing lever, Kit d'assemblage, levier de déviation**

MERCEDES-BENZ COUPE (C123),KOMBI Kombi (S123),S-KLASSE Coupe (C126),S-KLASSE Stufenheck (W108, W109),S-KLASSE (W126),SL Coupe (C107),SL (R107),Stufenheck (W123),/8 (W115)

33973 **Lagerung, Lenker, Control Arm-/Trailing Arm Bush, Suspension, bras de liaison**

MERCEDES-BENZ CABRIOLET (A124),C-KLASSE Kombi (S202),C-KLASSE (W202),CLK Cabriolet (A208),CLK (C208),COUPE (C124),E-KLASSE Cabriolet (A124),E-KLASSE Coupe (C124),E-KLASSE Kombi (S124),E-KLASSE Kombi (S210),E-KLASSE (W124),E-KLASSE (W210),KOMBI Kombi (S124),SL (R129),Stufenheck (W124),190 (W201)

33974 **Reparatursatz, Umlenkhebel, Repair Kit, reversing lever, Kit d'assemblage, levier de déviation**

MERCEDES-BENZ C-KLASSE Kombi (S202),C-KLASSE (W202),CLK Cabriolet (A208),CLK (C208),SLK (R170)

33976 **Lagerung, Lenker, Control Arm-/Trailing Arm Bush, Suspension, bras de liaison**

MERCEDES-BENZ C-KLASSE Kombi (S202),C-KLASSE (W202),CLK Cabriolet (A208),CLK (C208),SLK (R170)

33977 **Lagerung, Lenker, Control Arm-/Trailing Arm Bush, Suspension, bras de liaison**

MERCEDES-BENZ C-KLASSE Kombi (S202),C-KLASSE (W202),CLK Cabriolet (A208),CLK (C208),E-KLASSE Kombi (S210),E-KLASSE (W210),SLK (R170)

33978 **Lagerung, Achskörper, Hub Carrier Bush, Suspension, corps de l'essieu**

MERCEDES-BENZ C-KLASSE Kombi (S202),C-KLASSE (W202),CLK Cabriolet (A208),CLK (C208),SLK (R170),190 (W201)

33979 **Lagerung, Lenker, Control Arm-/Trailing Arm Bush, Suspension, bras de liaison**

MERCEDES-BENZ E-KLASSE Kombi (S210),E-KLASSE (W210)

33987 **Lagerung, Lenker, Control Arm-/Trailing Arm Bush, Suspension, bras de liaison**

VW PASSAT Variant (3C5),PASSAT (3C2),TIGUAN (5N_)

33988 **Lagerung, Achskörper, Hub Carrier Bush, Suspension, corps de l'essieu**

AUDI A4 Avant (8D5, B5),A4 (8D2, B5)

33994 **Lagerung, Lenker, Control Arm-/Trailing Arm Bush, Suspension, bras de liaison**

VOLVO 740 Kombi (745),740 (744),760 Kombi (704, 765),760 (704, 764),780,940 II Kombi (945),940 II (944),940 Kombi (945),940 (944),960 II Kombi (965),960 II (964),960 Kombi (965),960 (964)

33995 **Lagerung, Lenker, Control Arm-/Trailing Arm Bush, Suspension, bras de liaison**

VOLVO S60,S80 (TS, XY),V70 II Kombi (P80_),XC70 CROSS COUNTRY

33996 **Lagerung, Lenker, Control Arm-/Trailing Arm Bush, Suspension, bras de liaison**

VOLVO S60,S80 (TS, XY),V70 II Kombi (P80_)

34053 **Reparatursatz, Achskörper, Repair Kit, axle body, Kit de réparation, corps de l'essieu**

FIAT BARCHETTA (183),PUNTO Cabriolet (176C),PUNTO (176),LANCIA Y (840A)

34054 **Reparatursatz, Achskörper, Repair Kit, axle body, Kit de réparation, corps de l'essieu**

ALFA ROMEO 145 (930),146 (930),FIAT BRAVO (182),PALIO Weekend (178DX),PALIO (178BX),TIPO (160)

34413 **Reparatursatz, Achskörper, Repair Kit, axle body, Kit de réparation, corps de l'essieu**

CITROËN BX Break (XB-_),BX (XB-_),C15 (VD-_),XANTIA (X1),XANTIA (X2)

36120 **Reparatursatz, Stabilisatorlager, Repair Kit, stabilizer suspension, Kit de réparation, suspension du stabilisateur**

RENAULT 11 (B/C37_),9 (L42_)

36121 **Reparatursatz, Stabilisatorlager, Repair Kit, stabilizer suspension, Kit de réparation, suspension du stabilisateur**

RENAULT 21 (B48_),21 Kombi (K48_),21 Stufenheck (L48_)

36122 **Reparatursatz, Stabilisatorlager, Repair Kit, stabilizer suspension, Kit de réparation, suspension du stabilisateur**

RENAULT 21 (B48_),21 Kombi (K48_),21 Stufenheck (L48_)

36123 **Reparatursatz, Stabilisatorlager, Repair Kit, stabilizer suspension, Kit de réparation, suspension du stabilisateur**

RENAULT CLIO I (B/C57_, 5/357_),CLIO I Kasten (S57_)

36124 **Reparatursatz, Stabilisatorlager, Repair Kit, stabilizer suspension, Kit de réparation, suspension du stabilisateur**

RENAULT 21 (B48_),21 Kasten (S48_),21 Kombi (K48_),21 Stufenheck (L48_)

36125 **Reparatursatz, Stabilisatorlager, Repair Kit, stabilizer suspension, Kit de réparation, suspension du stabilisateur**

RENAULT 21 (B48_),21 Kasten (S48_),21 Kombi (K48_),21 Stufenheck (L48_)

36126 **Reparatursatz, Stabilisatorlager, Repair Kit, stabilizer suspension, Kit de réparation, suspension du stabilisateur**

RENAULT MEGANE I (BA0/1_),MEGANE I Cabriolet (EA0/1_),MEGANE I Classic (LA0/1_),MEGANE I Coach (DA0/1_),MEGANE Scenic (JA0/1_),19 I (B/C53_),19 I Cabriolet (D53_),19 I Chamade (L53_),19 II (B/C53_),19 II Cabriolet (D53_, 853_),19 II Chamade (L53_)

36127 **Reparatursatz, Stabilisatorlager, Repair Kit, stabilizer suspension, Kit de réparation, suspension du stabilisateur**

RENAULT 19 I (B/C53_),19 I Cabriolet (D53_),19 I Chamade (L53_),19 II (B/C53_),19 II Cabriolet (D53_, 853_),19 II Chamade (L53_),19 II Kasten (S53_)

36128 **Reparatursatz, Stabilisatorlager, Repair Kit, stabilizer suspension, Kit de réparation, suspension du stabilisateur**

RENAULT MEGANE I (BA0/1_),MEGANE I Cabriolet (EA0/1_),MEGANE I Classic (LA0/1_),MEGANE I Coach (DA0/1_),MEGANE Scenic (JA0/1_),19 I (B/C53_),19 I Cabriolet (D53_),19 I Chamade (L53_),19 II (B/C53_),19 II Cabriolet (D53_, 853_),19 II Chamade (L53_)

36129 **Reparatursatz, Stabilisatorlager, Repair Kit, stabilizer suspension, Kit de réparation, suspension du stabilisateur**

RENAULT 21 (B48_),21 Kombi (K48_),21 Stufenheck (L48_)

36130 **Reparatursatz, Stabilisatorlager, Repair Kit, stabilizer suspension, Kit de réparation, suspension du stabilisateur**

RENAULT 21 (B48_),21 Kombi (K48_),21 Stufenheck (L48_)

36131 **Reparatursatz, Stabilisatorlager, Repair Kit, stabilizer suspension, Kit de réparation, suspension du stabilisateur**

RENAULT RAPID Kasten (F40_, G40_),SUPER 5 (B/C40_)

36132 **Reparatursatz, Stabilisatorlager, Repair Kit, stabilizer suspension, Kit de réparation, suspension du stabilisateur**

RENAULT CLIO I (B/C57_, 5/357_),CLIO I Kasten (S57_)

36133 **Reparatursatz, Stabilisatorlager, Repair Kit, stabilizer suspension, Kit de réparation, suspension du stabilisateur**

RENAULT CLIO I (B/C57_, 5/357_),CLIO I Kasten (S57_)

36134 **Reparatursatz, Stabilisatorlager, Repair Kit, stabilizer suspension, Kit de réparation, suspension du stabilisateur**

RENAULT ESPACE II (J/S63_)

36135 **Reparatursatz, Stabilisatorlager, Repair Kit, stabilizer suspension, Kit de réparation, suspension du stabilisateur**

RENAULT ESPACE II (J/S63_)

36136 **Reparatursatz, Stabilisatorlager, Repair Kit, stabilizer suspension, Kit de réparation, suspension du stabilisateur**

RENAULT LAGUNA (B56_, 556_),LAGUNA Grandtour (K56_)

36137 **Reparatursatz, Stabilisatorlager, Repair Kit, stabilizer suspension, Kit de réparation, suspension du stabilisateur**

RENAULT MEGANE I (BA0/1_),MEGANE I Cabriolet (EA0/1_),MEGANE I Classic (LA0/1_),MEGANE I Coach (DA0/1_),MEGANE Scenic (JA0/1_)

36138 **Reparatursatz, Stabilisatorlager, Repair Kit, stabilizer suspension, Kit de réparation, suspension du stabilisateur**

RENAULT 4 Kasten (R21_, R23_),4 (112_),5 Kasten (238_),5 (122_),6 (118_)

36139 **Reparatursatz, Stabilisatorlager, Repair Kit, stabilizer suspension, Kit de réparation, suspension du stabilisateur**

RENAULT 4 Kasten (R21_, R23_),4 (112_),5 Kasten (238_),5 (122_),6 (118_)

36140 **Reparatursatz, Stabilisatorlager, Repair Kit, stabilizer suspension, Kit de réparation, suspension du stabilisateur**

RENAULT 4 Kasten (R21_, R23_),4 (112_),5 Kasten (238_),5 (122_),6 (118_)

36143 **Reparatursatz, Stabilisatorlager, Repair Kit, stabilizer suspension, Kit de réparation, suspension du stabilisateur**

RENAULT TRAFIC Bus (TXW),TRAFIC Bus (T5, T6, T7),TRAFIC Kasten (TXX),TRAFIC Kasten (T1, T3, T4),TRAFIC Pritsche/Fahrgestell (PXX),TRAFIC Pritsche/Fahrgestell (P6)

36144 **Reparatursatz, Stabilisatorlager, Repair Kit, stabilizer suspension, Kit de réparation, suspension du stabilisateur**

RENAULT TRAFIC Bus (TXW),TRAFIC Bus (T5, T6, T7),TRAFIC Kasten (TXX),TRAFIC Kasten (T1, T3, T4),TRAFIC Pritsche/Fahrgestell (PXX),TRAFIC Pritsche/Fahrgestell (P6)

36145 **Reparatursatz, Stabilisatorlager, Repair Kit, stabilizer suspension, Kit de réparation, suspension du stabilisateur**

RENAULT TRAFIC Bus (TXW),TRAFIC Bus (T5, T6, T7),TRAFIC Kasten (TXX),TRAFIC Kasten (T1, T3, T4),TRAFIC Pritsche/Fahrgestell (PXX),TRAFIC Pritsche/Fahrgestell (P6)

36300 **Reparatursatz, Stabilisatorlager, Repair Kit, stabilizer suspension, Kit de réparation, suspension du stabilisateur**

PEUGEOT 309 I (10C, 10A)

36301 **Reparatursatz, Stabilisatorlager, Repair Kit, stabilizer suspension, Kit de réparation, suspension du stabilisateur**

PEUGEOT 405 I Break (15E),405 I (15B),405 II Break (4E),405 II (4B)

36302 **Reparatursatz, Stabilisatorlager, Repair Kit, stabilizer suspension, Kit de réparation, suspension du stabilisateur**

PEUGEOT 405 I Break (15E),405 I (15B),405 II Break (4E),405 II (4B)

36303 **Reparatursatz, Stabilisatorlager, Repair Kit, stabilizer suspension, Kit de réparation, suspension du stabilisateur**

PEUGEOT 405 I Break (15E),405 I (15B),405 II Break (4E),405 II (4B)

36304 **Reparatursatz, Stabilisatorlager, Repair Kit, stabilizer suspension, Kit de réparation, suspension du stabilisateur**

CITROËN C15 (VD-_),PEUGEOT 205 I Cabriolet (741B, 20D),205 I (741A/C),205 II (20A/C),205 Kasten

36305 **Reparatursatz, Stabilisatorlager, Repair Kit, stabilizer suspension, Kit de réparation, suspension du stabilisateur**

PEUGEOT 205 I Cabriolet (741B, 20D),205 I (741A/C),205 II (20A/C),205 Kasten

36306 **Reparatursatz, Stabilisatorlager, Repair Kit, stabilizer suspension, Kit de réparation, suspension du stabilisateur**

PEUGEOT 309 I (10C, 10A)

36307 **Reparatursatz, Stabilisatorlager, Repair Kit, stabilizer suspension, Kit de réparation, suspension du stabilisateur**

PEUGEOT 309 I (10C, 10A)

36308 **Reparatursatz, Stabilisatorlager, Repair Kit, stabilizer suspension, Kit de réparation, suspension du stabilisateur**

PEUGEOT 406 (8B)

36309 **Reparatursatz, Stabilisatorlager, Repair Kit, stabilizer suspension, Kit de réparation, suspension du stabilisateur**

PEUGEOT 406 Break (8E/F),406 Coupe (8C),406 (8B)

36310 **Reparatursatz, Stabilisatorlager, Repair Kit, stabilizer suspension, Kit de réparation, suspension du stabilisateur**

PEUGEOT 205 I (741A/C),205 II (20A/C)

36400 **Reparatursatz, Stabilisatorlager, Repair Kit, stabilizer suspension, Kit de réparation, suspension du stabilisateur**

CITROËN ZX Break (N2),ZX (N2),PEUGEOT 306 Break (7E, N3, N5),306 Cabriolet (7D, N3, N5),306 Schrägheck (7A, 7C, N3, N5),306 (7B, N3, N5)

36401 **Reparatursatz, Stabilisatorlager, Repair Kit, stabilizer suspension, Kit de réparation, suspension du stabilisateur**

CITROËN ZX Break (N2),ZX (N2),PEUGEOT 306 Break (7E, N3, N5),306 Cabriolet (7D, N3, N5),306 Schrägheck (7A, 7C, N3, N5),306 (7B, N3, N5)

36402 **Reparatursatz, Stabilisatorlager, Repair Kit, stabilizer suspension, Kit de réparation, suspension du stabilisateur**

CITROËN AX (ZA-_),SAXO (S0, S1),PEUGEOT 106 I (1A, 1C),106 II (1)

36403 **Reparatursatz, Stabilisatorlager, Repair Kit, stabilizer suspension, Kit de réparation, suspension du stabilisateur**

PEUGEOT 205 I Cabriolet (741B, 20D),205 I (741A/C),205 II (20A/C),205 Kasten

36404 **Reparatursatz, Stabilisatorlager, Repair Kit, stabilizer suspension, Kit de réparation, suspension du stabilisateur**

CITROËN AX (ZA-_),SAXO (S0, S1)

36405 **Reparatursatz, Stabilisatorlager, Repair Kit, stabilizer suspension, Kit de réparation, suspension du stabilisateur**

CITROËN AX (ZA-_)

36406 **Reparatursatz, Stabilisatorlager, Repair Kit, stabilizer suspension, Kit de réparation, suspension du stabilisateur**

CITROËN ZX Break (N2),ZX (N2),PEUGEOT 306 Break (7E, N3, N5),306 Cabriolet (7D, N3, N5),306 Schrägheck (7A, 7C, N3, N5),306 (7B, N3, N5)

36407 **Reparatursatz, Stabilisatorlager, Repair Kit, stabilizer suspension, Kit de réparation, suspension du stabilisateur**

CITROËN XANTIA Break (X1),XANTIA Break (X2),XANTIA (X1),XANTIA (X2)

36408 **Reparatursatz, Stabilisatorlager, Repair Kit, stabilizer suspension, Kit de réparation, suspension du stabilisateur**

CITROËN XANTIA Break (X2),XANTIA (X2)

36600 **Reparatursatz, Stabilisatorlager, Repair Kit, stabilizer suspension, Kit de réparation, suspension du stabilisateur**

FORD COURIER Kasten (J5_, J3_),FIESTA III (GFJ),FIESTA IV (JA_, JB_),FIESTA Kasten (FVD)

36601 **Reparatursatz, Stabilisatorlager, Repair Kit, stabilizer suspension, Kit de réparation, suspension du stabilisateur**

FORD COURIER Kasten (J5_, J3_),FIESTA III (GFJ),FIESTA IV (JA_, JB_),FIESTA Kasten (FVD)

36660 **Reparatursatz, Lenker, Repair Kit, link, Kit de remise en état, bras de liaison**

BMW Z4 Coupe,Z4 (E85),3 Cabriolet (E46),3 Compact (E46),3 Coupe (E46),3 (E46),3 Touring (E46),BRILLIANCE BMW 3 SERIES (E46)

36661 **Lagerung, Achsstrebe, Tie Bar Bush, Suspension, jambe d'essieu**

BMW 3 Cabriolet (E36),3 Coupe (E36),3 Coupe (E46),3 (E36),3 (E46),3 Touring (E36),3 Touring (E46)

36662 **Lagerung, Achsstrebe, Tie Bar Bush, Suspension, jambe d'essieu**

BMW 3 Cabriolet (E36),3 Coupe (E36),3 Coupe (E46),3 (E36),3 (E46),3 Touring (E36),3 Touring (E46)

36663 **Lagerung, Lenker, Control Arm-/Trailing Arm Bush, Suspension, bras de liaison**

BMW 5 (E34),5 Touring (E34),7 (E32)

36664	**Lagerung, Achskörper, Hub Carrier Bush, Suspension, corps de l'essieu**
	BMW Z4 (E85),3 Cabriolet (E46),3 Compact (E46),3 Coupe (E46),3 (E46),3 Touring (E46)
36665	**Lagerung, Achskörper, Hub Carrier Bush, Suspension, corps de l'essieu**
	BMW X3 (E83),3 Cabriolet (E46),3 Compact (E46),3 Coupe (E46),3 (E46),3 Touring (E46)
36666	**Lagerung, Achskörper, Hub Carrier Bush, Suspension, corps de l'essieu**
	BMW X3 (E83),3 Cabriolet (E46),3 Compact (E46),3 Coupe (E46),3 (E46),3 Touring (E46)
36668	**Lagerung, Lenker, Control Arm-/Trailing Arm Bush, Suspension, bras de liaison**
	BMW 5 (E39),5 Touring (E39),7 (E38)
36668/2	**Lagerung, Lenker, Control Arm-/Trailing Arm Bush, Suspension, bras de liaison**
	BMW 5 (E39),5 Touring (E39),7 (E38)
36669	**Lagerung, Lenker, Control Arm-/Trailing Arm Bush, Suspension, bras de liaison**
	BMW 5 (E39),5 Touring (E39)
36669/2	**Lagerung, Lenker, Control Arm-/Trailing Arm Bush, Suspension, bras de liaison**
	BMW Z8,5 (E39),5 Touring (E39)
36670	**Lagerung, Lenker, Control Arm-/Trailing Arm Bush, Suspension, bras de liaison**
	ALPINA B10 (E34),B10 Kombi (E34),B11 (E32),B12 (E32),BMW 5 (E34),5 Touring (E34),7 (E32)
36687/2	**Lagerung, Lenker, Control Arm-/Trailing Arm Bush, Suspension, bras de liaison**
	BMW 5 (E39),5 Touring (E39)
36688	**Lagerung, Lenker, Control Arm-/Trailing Arm Bush, Suspension, bras de liaison**
	BMW 5 (E39),5 Touring (E39)
36689	**Reparatursatz, Lenker, Repair Kit, link, Kit de remise en état, bras de liaison**
	BMW 7 (E65, E66)
36690	**Lagerung, Radlagergehäuse, Bearing, wheel bearing housing, Roulement, boîtier du roulement des roues**
	LAND ROVER RANGE ROVER III (LM)
36700	**Reparatursatz, Stabilisatorlager, Repair Kit, stabilizer suspension, Kit de réparation, suspension du stabilisateur**
	OPEL CORSA A CC (93_, 94_, 98_, 99_),CORSA A Kasten,CORSA A TR (91_, 92_, 96_, 97_)
36701	**Reparatursatz, Stabilisatorlager, Repair Kit, stabilizer suspension, Kit de réparation, suspension du stabilisateur**
	OPEL CORSA A CC (93_, 94_, 98_, 99_),CORSA A Kasten,CORSA A TR (91_, 92_, 96_, 97_)
36703	**Lagerung, Lenker, Control Arm-/Trailing Arm Bush, Suspension, bras de liaison**
	FIAT CROMA (194),OPEL SIGNUM,VECTRA C,VECTRA C Caravan,VECTRA C GTS,SAAB 9-3 Cabriolet (YS3F),9-3 Kombi,9-3 (YS3F),VAUXHALL SIGNUM,VECTRA Mk II,VECTRA Mk II Estate,VECTRA Mk II GTS
36704	**Lagerung, Lenker, Control Arm-/Trailing Arm Bush, Suspension, bras de liaison**
	NISSAN INTERSTAR Bus (X70),INTERSTAR Kasten (X70),OPEL MOVANO Combi (J9),MOVANO Kasten (F9),MOVANO Kipper (H9),MOVANO Pritsche/Fahrgestell (U9, E9),RENAULT MASTER II Bus (JD/ND),MASTER II Kasten (FD),MASTER II Pritsche/Fahrgestell (ED/HD/UD),MASTER III Bus (JD),MASTER III Kasten (HD, FD),MASTER III Pritsche/Fahrgestell (ED, UD)
36705	**Lagerung, Lenker, Control Arm-/Trailing Arm Bush, Suspension, bras de liaison**
	NISSAN INTERSTAR Bus (X70),INTERSTAR Kasten (X70),OPEL MOVANO Combi (J9),MOVANO Kasten (F9),MOVANO Kipper (H9),MOVANO Pritsche/Fahrgestell (U9, E9),RENAULT MASTER II Bus (JD/ND),MASTER II Kasten (FD),MASTER II Pritsche/Fahrgestell (ED/HD/UD),MASTER III Bus (JD),MASTER III Kasten (HD, FD),MASTER III Pritsche/Fahrgestell (ED, UD)
36764	**Lagerung, Stabilisatorkoppelstange, Mounting, stabilizer coupling rod, Suspension, barre de couplage stabilisatrice**
	OPEL ASTRA H,ASTRA H GTC,MERIVA
36770	**Lagerung, Blattfeder, Mounting, leaf spring, Suspension, ressort à lames**
	VW LT 28-35 I Bus (281-363),LT 28-35 I Kasten (281-363),LT 28-35 I Pritsche/Fahrgestell (281-363),LT 40-55 I Kasten (291-512),LT 40-55 I Pritsche/Fahrgestell (293-909)
36771	**Lagerung, Lenker, Control Arm-/Trailing Arm Bush, Suspension, bras de liaison**
	AUDI A6 Avant (4F5),A6 (4F2),A8 (4E_)
36772	**Lagerung, Lenker, Control Arm-/Trailing Arm Bush, Suspension, bras de liaison**
	AUDI A3 (8L1),TT Roadster (8N9),TT (8N3),VW GOLF IV (1J1),NEW BEETLE (9C1, 1C1)
36773	**Lagerung, Lenker, Control Arm-/Trailing Arm Bush, Suspension, bras de liaison**
	AUDI A4 Avant (8D5, B5),A4 Avant (8ED),A4 Avant (8E5, B6),A4 (8D2, B5),A4 (8EC),A4 (8E2, B6),A6 Allroad (4FH),A6 Avant (4B, C5),A6 Avant (4F5),A6 (4B, C5),A6 (4F2),A8 (4D2, 4D8),A8 (4E_),FAW-AUDI A4 Stufenheck (B7),A6 Stufenheck (C5),A6L Stufenheck (C6),SEAT EXEO ST (3R5),EXEO (3R2),VW PHAETON (3D2)
36774	**Lagerung, Lenker, Control Arm-/Trailing Arm Bush, Suspension, bras de liaison**
	AUDI A6 Allroad (4FH),A6 Avant (4F5),A6 (4F2),A8 (4E_),FAW-AUDI A6L Stufenheck (C6),VW PHAETON (3D2)
36775	**Lagerung, Achskörper, Hub Carrier Bush, Suspension, corps de l'essieu**
	AUDI A6 Avant (4B, C5),A6 Avant (4F5),A6 (4B, C5),A6 (4F2),SKODA SUPERB (3U4),SVW PASSAT Stufenheck,VW PASSAT Variant (3B5),PASSAT Variant (3B6),PASSAT (3B2),PASSAT (3B3)
36776	**Lagerung, Achskörper, Hub Carrier Bush, Suspension, corps de l'essieu**
	AUDI A6 Avant (4B, C5),A6 Avant (4F5),A6 (4B, C5),A6 (4F2),SKODA SUPERB (3U4),SVW PASSAT Stufenheck,VW PASSAT Variant (3B5),PASSAT Variant (3B6),PASSAT (3B2),PASSAT (3B3)
36777	**Lagerung, Lenker, Control Arm-/Trailing Arm Bush, Suspension, bras de liaison**
	AUDI A6 Avant (4F5),A6 (4F2),A8 (4E_),VW PHAETON (3D2)
36778	**Lagerung, Lenker, Control Arm-/Trailing Arm Bush, Suspension, bras de liaison**
	AUDI A4 Avant (8ED),A4 (8EC)

36780 **Lagerung, Lenker, Control Arm-/Trailing Arm Bush, Suspension, bras de liaison**

SKODA FELICIA I Fun (797),FELICIA I Kombi (6U5),FELICIA I (6U1),FELICIA II Kombi (6U5),FELICIA II (6U1)

36781 **Lagerung, Lenker, Control Arm-/Trailing Arm Bush, Suspension, bras de liaison**

SKODA FELICIA I Fun (797),FELICIA I Kombi (6U5),FELICIA I (6U1),FELICIA II Kombi (6U5),FELICIA II (6U1)

36782 **Reparatursatz, Achskörper, Repair Kit, axle body, Kit de réparation, corps de l'essieu**

AUDI A6 Avant (4B, C5),A6 Avant (4F5),A6 (4B, C5),A6 (4F2),SKODA SUPERB (3U4),SVW PASSAT Stufenheck,VW PASSAT Variant (3B5),PASSAT Variant (3B6),PASSAT (3B2),PASSAT (3B3)

36784 **Lagerung, Lenker, Control Arm-/Trailing Arm Bush, Suspension, bras de liaison**

VW TRANSPORTER T4 Bus (70XB, 70XC, 7DB, 7DW),TRANSPORTER T4 Kasten (70XA),TRANSPORTER T4 Pritsche/Fahrgestell (70XD)

36796 **Lagerung, Achskörper, Hub Carrier Bush, Suspension, corps de l'essieu**

MERCEDES-BENZ E-KLASSE Kombi (S210),E-KLASSE (W210)

36798 **Lagerung, Lenker, Control Arm-/Trailing Arm Bush, Suspension, bras de liaison**

AUDI A2 (8Z0)

36832 **Lagerung, Lenker, Control Arm-/Trailing Arm Bush, Suspension, bras de liaison**

MERCEDES-BENZ S-KLASSE Coupe (C215),S-KLASSE (W220)

36833 **Lagerung, Lenker, Control Arm-/Trailing Arm Bush, Suspension, bras de liaison**

MERCEDES-BENZ S-KLASSE (W220)

36838 **Lagerung, Lenker, Control Arm-/Trailing Arm Bush, Suspension, bras de liaison**

MERCEDES-BENZ CLS (C219),E-KLASSE Kombi (S211),E-KLASSE (W211),SL (R230)

36852 **Lagerung, Achsträger, Mounting, axle bracket, Suspension, support d'essieu**

AUDI A3 (8L1),SEAT TOLEDO II (1M2),SKODA OCTAVIA Combi (1U5),OCTAVIA (1U2),VW BORA Kombi (1J6),BORA (1J2),GOLF III Variant (1H5),GOLF III (1H1),GOLF IV Variant (1J5),GOLF IV (1J1),NEW BEETLE (9C1, 1C1)

36899 **Lagerung, Achskörper, Hub Carrier Bush, Suspension, corps de l'essieu**

MERCEDES-BENZ CABRIOLET (A124),COUPE (C124),E-KLASSE Coupe (C124),E-KLASSE Kombi (S124),E-KLASSE (W124),KOMBI Kombi (S124),Stufenheck (W124)

36904 **Lagerung, Stabilisator, Anti-roll Bar Bush Kit, Suspension, stabilisateur**

AUDI A6 (4A, C4),100 Avant (4A, C4),100 (4A, C4)

36908 **Reparatursatz, Stabilisatorlager, Repair Kit, stabilizer suspension, Kit de réparation, suspension du stabilisateur**

MERCEDES-BENZ C-KLASSE Kombi (S202),C-KLASSE (W202),CLK (C208),COUPE (C124),E-KLASSE Coupe (C124),E-KLASSE (W124),SL (R129),Stufenheck (W124)

36909 **Reparatursatz, Lenker, Repair Kit, link, Kit de remise en état, bras de liaison**

MERCEDES-BENZ E-KLASSE Kombi (S210),E-KLASSE (W210)

36910 **Lagerung, Lenker, Control Arm-/Trailing Arm Bush, Suspension, bras de liaison**

MERCEDES-BENZ E-KLASSE Kombi (S210),E-KLASSE (W210)

36911 **Lagerung, Lenker, Control Arm-/Trailing Arm Bush, Suspension, bras de liaison**

MERCEDES-BENZ C-KLASSE Kombi (S202),C-KLASSE (W202)

36912 **Lagerung, Lenker, Control Arm-/Trailing Arm Bush, Suspension, bras de liaison**

MERCEDES-BENZ C-KLASSE Kombi (S202),C-KLASSE (W202)

36913 **Lagerung, Stabilisator, Anti-roll Bar Bush Kit, Suspension, stabilisateur**

MERCEDES-BENZ C-KLASSE Kombi (S202),C-KLASSE (W202),CLK (C208),COUPE (C124),E-KLASSE Kombi (S124),E-KLASSE (W124),SL (R129),Stufenheck (W124)

36914 **Lagerung, Stabilisator, Anti-roll Bar Bush Kit, Suspension, stabilisateur**

VW PASSAT Variant (3A5, 35I),PASSAT (3A2, 35I)

36915 **Lagerung, Lenker, Control Arm-/Trailing Arm Bush, Suspension, bras de liaison**

AUDI ALLROAD (4BH),A4 Avant (8D5, B5),A4 Avant (8E5, B6),A4 Cabriolet (8H7, 8HE),A4 (8D2, B5),A4 (8E2, B6),A6 Avant (4B, C5),A6 (4B, C5),A8 (4D2, 4D8),SKODA SUPERB (3U4),VW PASSAT Variant (3B5),PASSAT Variant (3B6),PASSAT (3B2),PASSAT (3B3)

36916 **Reparatursatz, Lenker, Repair Kit, link, Kit de remise en état, bras de liaison**

MERCEDES-BENZ C-KLASSE Kombi (S202),C-KLASSE (W202)

36917 **Reparatursatz, Lenker, Repair Kit, link, Kit de remise en état, bras de liaison**

MERCEDES-BENZ C-KLASSE Kombi (S202),C-KLASSE (W202),S-KLASSE (W140),SLK (R170)

36919 **Reparatursatz, Achskörper, Repair Kit, axle body, Kit de réparation, corps de l'essieu**

MERCEDES-BENZ S-KLASSE Coupe (C140),S-KLASSE (W140)

36920 **Reparatursatz, Achskörper, Repair Kit, axle body, Kit de réparation, corps de l'essieu**

MERCEDES-BENZ S-KLASSE Coupe (C140),S-KLASSE (W140)

36921 **Lagerung, Achskörper, Hub Carrier Bush, Suspension, corps de l'essieu**

MERCEDES-BENZ S-KLASSE Coupe (C140),S-KLASSE (W140)

36922 **Lagerung, Achskörper, Hub Carrier Bush, Suspension, corps de l'essieu**

MERCEDES-BENZ S-KLASSE Coupe (C140),S-KLASSE (W140)

36923 **Lagerung, Lenker, Control Arm-/Trailing Arm Bush, Suspension, bras de liaison**

MERCEDES-BENZ S-KLASSE Coupe (C140),S-KLASSE (W140)

36924 **Lagerung, Achskörper, Hub Carrier Bush, Suspension, corps de l'essieu**

MERCEDES-BENZ 190 (W201)

36925 **Lagerung, Blattfeder, Mounting, leaf spring, Suspension, ressort à lames**

MERCEDES-BENZ T1 Kasten (601),T1 Pritsche/Fahrgestell (601),T1 Pritsche/Fahrgestell (602)

36926 **Lagerung, Stabilisatorkoppelstange, Mounting, stabilizer coupling rod, Suspension, barre de couplage stabilisatrice**

MERCEDES-BENZ T1 Bus (602),T1 Kasten (602),T1 Pritsche/Fahrgestell (601),T1 Pritsche/Fahrgestell (602)

36938 **Lagerung, Lenker, Control Arm-/Trailing Arm Bush, Suspension, bras de liaison**

SEAT CORDOBA (6L2),IBIZA IV (6L1),SKODA FABIA,FABIA Combi,FABIA Combi (6Y5),FABIA Praktik,FABIA Stufenheck (6Y3),FABIA (6Y2),VW FOX (5Z1),POLO Stufenheck,POLO (9N_)

36939 **Lagerung, Lenker, Control Arm-/Trailing Arm Bush, Suspension, bras de liaison**

SEAT CORDOBA (6L2),IBIZA IV (6L1),SKODA FABIA,FABIA Combi,FABIA Combi (6Y5),FABIA Praktik,FABIA Stufenheck (6Y3),FABIA (6Y2),VW FOX (5Z1),POLO Stufenheck,POLO (9N_)

36940 **Lagerung, Stabilisatorkoppelstange, Mounting, stabilizer coupling rod, Suspension, barre de couplage stabilisatrice**

VW TRANSPORTER T4 Bus (70XB, 70XC, 7DB, 7DW),TRANSPORTER T4 Kasten (70XA),TRANSPORTER T4 Pritsche/Fahrgestell (70XD)

36941 **Lagerung, Lenker, Control Arm-/Trailing Arm Bush, Suspension, bras de liaison**

AUDI A6 (4A, C4),V8 (44_, 4C_),100 Avant (4A, C4),100 (4A, C4),200 Avant (44, 44Q),200 (44, 44Q)

36947 **Lagerung, Stabilisator, Anti-roll Bar Bush Kit, Suspension, stabilisateur**

MERCEDES-BENZ SPRINTER 2-t Bus (901, 902),SPRINTER 2-t Kasten (901, 902),SPRINTER 2-t Pritsche/Fahrgestell (901, 902),SPRINTER 3-t Bus (903),SPRINTER 3-t Kasten (903),SPRINTER 3-t Pritsche/Fahrgestell (903),SPRINTER 4-t Bus (904),SPRINTER 4-t Kasten (904),SPRINTER 4-t Pritsche/Fahrgestell (904),VW LT 28-35 II Bus (2DM),LT 28-46 II Kasten (2DX0AE),LT 28-46 II Pritsche/Fahrgestell (2DX0FE)

36948 **Lagerung, Lenker, Control Arm-/Trailing Arm Bush, Suspension, bras de liaison**

AUDI A3 Sportback (8PA),A3 (8P1),FAW-VW SAGITAR,SEAT ALTEA (5P1),LEON (1P1),TOLEDO III (5P2),SKODA OCTAVIA Combi (1Z5),OCTAVIA (1Z3),VW CADDY III Kasten (2KA, 2KH),CADDY III Kombi (2KB, 2KJ),EOS (1F7),GOLF PLUS (5M1, 521),GOLF V (1K1),JETTA III (1K2),TOURAN (1T1, 1T2)

36949 **Lagerung, Lenker, Control Arm-/Trailing Arm Bush, Suspension, bras de liaison**

AUDI A3 Sportback (8PA),A3 (8P1),FAW-VW SAGITAR,SEAT ALTEA (5P1),LEON (1P1),TOLEDO III (5P2),SKODA OCTAVIA Combi (1Z5),OCTAVIA (1Z3),VW CADDY III Kasten (2KA, 2KH),CADDY III Kombi (2KB, 2KJ),EOS (1F7),GOLF PLUS (5M1, 521),GOLF V (1K1),JETTA III (1K2),TOURAN (1T1, 1T2)

36950 **Lagerung, Lenker, Control Arm-/Trailing Arm Bush, Suspension, bras de liaison**

AUDI A3 Sportback (8PA),A3 (8P1),FAW-VW MAGOTAN,SAGITAR,SEAT ALTEA XL (5P5),ALTEA (5P1),CORDOBA Schrägheck (6K2),IBIZA III (6K1),LEON (1P1),TOLEDO III (5P2),SKODA OCTAVIA Combi (1Z5),OCTAVIA (1Z3),SVW TOURAN Großraumlimousine,SVW SKODA OCTAVIA,VW CADDY III Kasten (2KA, 2KH),CADDY III Kombi (2KB, 2KJ),EOS (1F7),GOLF PLUS (5M1, 521),GOLF V Variant (1K5),GOLF V (1K1),GOLF VI Variant (AJ5),GOLF VI (5K1),JETTA III (1K2),PASSAT Variant (3C5),PASSAT (3C2),TIGUAN (5N_),TOURAN (1T1, 1T2)

36961 **Lagerung, Lenker, Control Arm-/Trailing Arm Bush, Suspension, bras de liaison**

MG MG ZT,MG ZT- T,ROVER 75 (RJ),75 Tourer (RJ)

36962 **Lagerung, Lenker, Control Arm-/Trailing Arm Bush, Suspension, bras de liaison**

MG MG ZT,MG ZT- T,ROVER 75 (RJ),75 Tourer (RJ)

36971 **Reparatursatz, Achskörper, Repair Kit, axle body, Kit de réparation, corps de l'essieu**

MERCEDES-BENZ C-KLASSE Kombi (S202),C-KLASSE (W202),CLK Cabriolet (A208),CLK (C208),S-KLASSE (W140),SLK (R170),190 (W201)

36972 **Lagerung, Lenker, Control Arm-/Trailing Arm Bush, Suspension, bras de liaison**

MERCEDES-BENZ CABRIOLET (A124),C-KLASSE Kombi (S202),C-KLASSE Kombi (S203),C-KLASSE Sportcoupe (CL203),C-KLASSE (W202),C-KLASSE (W203),CLK Cabriolet (A208),CLK Cabriolet (A209),CLK (C208),CLK (C209),COUPE (C124),E-KLASSE Cabriolet (A124),E-KLASSE Coupe (C124),E-KLASSE Kombi (S124),E-KLASSE Kombi (S210),E-KLASSE (W124),E-KLASSE (W210),KOMBI Kombi (S124),SL (R129),SLK (R170),SLK (R171),Stufenheck (W124),190 (W201)

36973 **Reparatursatz, Achskörper, Repair Kit, axle body, Kit de réparation, corps de l'essieu**

MERCEDES-BENZ C-KLASSE Kombi (S202),E-KLASSE (W210)

36975 **Reparatursatz, Lenker, Repair Kit, link, Kit de remise en état, bras de liaison**

VOLVO S70 (P80_),S80 (TS, XY),V70 I Kombi (P80_),V70 II Kombi (P80_),850 Kombi (LW),850 (LS)

36976 **Lagerung, Lenker, Control Arm-/Trailing Arm Bush, Suspension, bras de liaison**

VOLVO S70 (P80_),S80 (TS, XY),V70 I Kombi (P80_),V70 II Kombi (P80_),850 Kombi (LW),850 (LS)

36980 **Lagerung, Lenker, Control Arm-/Trailing Arm Bush, Suspension, bras de liaison**

MERCEDES-BENZ S-KLASSE Coupe (C126),S-KLASSE Coupe (C140),S-KLASSE (W140)

36987 **Lagerung, Lenker, Control Arm-/Trailing Arm Bush, Suspension, bras de liaison**

MERCEDES-BENZ C-KLASSE Kombi (S203),C-KLASSE Sportcoupe (CL203),C-KLASSE (W203),CLK Cabriolet (A209),CLK (C209)

36988 **Lagerung, Lenker, Control Arm-/Trailing Arm Bush, Suspension, bras de liaison**

MERCEDES-BENZ CLS (C219),E-KLASSE Kombi (S211),E-KLASSE (W211),SL (R230)

36989 **Lagerung, Achsstrebe, Tie Bar Bush, Suspension, jambe d'essieu**

MERCEDES-BENZ E-KLASSE Kombi (S211),E-KLASSE (W211)

37830 **Lagerung, Lenker, Control Arm-/Trailing Arm Bush, Suspension, bras de liaison**

MERCEDES-BENZ CLS (C219),E-KLASSE Kombi (S211),E-KLASSE (W211),SL (R230)

37831 **Lagerung, Lenker, Control Arm-/Trailing Arm Bush, Suspension, bras de liaison**

MERCEDES-BENZ E-KLASSE Kombi (S211),E-KLASSE (W211)

37832 **Lagerung, Lenker, Control Arm-/Trailing Arm Bush, Suspension, bras de liaison**

MERCEDES-BENZ S-KLASSE Coupe (C140),S-KLASSE (W140),S-KLASSE (W220)

37833 **Lagerung, Lenker, Control Arm-/Trailing Arm Bush, Suspension, bras de liaison**

MERCEDES-BENZ S-KLASSE Coupe (C140),S-KLASSE Coupe (C215),S-KLASSE (W140),S-KLASSE (W220)

37834 **Reparatursatz, Lenker, Repair Kit, link, Kit de remise en état, bras de liaison**

MERCEDES-BENZ M-KLASSE (W163)

37835 **Lagerung, Lenker, Control Arm-/Trailing Arm Bush, Suspension, bras de liaison**

MERCEDES-BENZ S-KLASSE (W221)

37836 **Lagerung, Lenker, Control Arm-/Trailing Arm Bush, Suspension, bras de liaison**

MERCEDES-BENZ VITO Bus (638),VITO Kasten (638),V-KLASSE (638/2)

37837 **Lagerung, Stabilisator, Anti-roll Bar Bush Kit, Suspension, stabilisateur**

MERCEDES-BENZ SPRINTER 3,5-t Bus (906),SPRINTER 3,5-t Kasten (906),SPRINTER 5-t Kasten (906),VIANO (W639),VITO Bus (W639),VITO Bus (638),VITO Kasten (W639),VITO Kasten (638),V-KLASSE (638/2)

37838 **Lagerung, Stabilisator, Anti-roll Bar Bush Kit, Suspension, stabilisateur**

MERCEDES-BENZ SPRINTER 2-t Bus (901, 902),SPRINTER 2-t Kasten (901, 902),SPRINTER 2-t Pritsche/Fahrgestell (901, 902),SPRINTER 3-t Bus (903),SPRINTER 3-t Kasten (903),SPRINTER 3-t Pritsche/Fahrgestell (903)

49010 **Spurstangenkopf, Tie Rod End, Rotule de barre de connexion**

FIAT FIORINO Kasten (146 Uno),FIORINO Pick up (146),FIORINO (147)

49011 **Spurstangenkopf, Tie Rod End, Rotule de barre de connexion**

FIAT FIORINO Kasten (146 Uno),FIORINO Pick up (146),FIORINO (147)

49012 **Lenker, Radaufhängung, Track Control Arm, Bras de liaison, suspension de roue**

FIAT FIORINO Kasten (146 Uno),FIORINO Pick up (146)

49014 **Trag-/Führungsgelenk, Ball Joint, Rotule de suspension**

LANCIA KAPPA Coupe (838),KAPPA SW (838B),KAPPA (838A)

49017 **Spurstangenkopf, Tie Rod End, Rotule de barre de connexion**

FIAT MAREA Weekend (185),MAREA (185),PALIO Weekend (178DX),PALIO (178BX),STRADA (178E)

49018 **Spurstangenkopf, Tie Rod End, Rotule de barre de connexion**

FIAT MAREA Weekend (185),MAREA (185),PALIO Weekend (178DX),PALIO (178BX),STRADA (178E)

49019 **Axialgelenk, Spurstange, Inner Tie Rod, Rotule de direction intérieure, barre de connexion**

FIAT PALIO Weekend (178DX),PALIO (178BX)

49020 **Axialgelenk, Spurstange, Inner Tie Rod, Rotule de direction intérieure, barre de connexion**

FIAT PALIO Weekend (178DX),PALIO (178BX)

49021 **Trag-/Führungsgelenk, Ball Joint, Rotule de suspension**

FIAT PALIO Weekend (178DX),PALIO (178BX)

49022 **Lenker, Radaufhängung, Track Control Arm, Bras de liaison, suspension de roue**

FIAT PALIO Weekend (178DX)

49023 **Lenker, Radaufhängung, Track Control Arm, Bras de liaison, suspension de roue**

FIAT PALIO Weekend (178DX)

49024 **Lenker, Radaufhängung, Track Control Arm, Bras de liaison, suspension de roue**

FIAT PALIO Weekend (178DX),STRADA (178E)

49025 **Lenker, Radaufhängung, Track Control Arm, Bras de liaison, suspension de roue**

FIAT PALIO Weekend (178DX),STRADA (178E)

49026 **Lenker, Radaufhängung, Track Control Arm, Bras de liaison, suspension de roue**

ALFA ROMEO 156 Sportwagon (932),156 (932)

49027 **Lenker, Radaufhängung, Track Control Arm, Bras de liaison, suspension de roue**

ALFA ROMEO 156 Sportwagon (932),156 (932)

49028 **Lenker, Radaufhängung, Track Control Arm, Bras de liaison, suspension de roue**

ALFA ROMEO 147 (937),156 Sportwagon (932),156 (932)

49029 **Lenker, Radaufhängung, Track Control Arm, Bras de liaison, suspension de roue**

ALFA ROMEO 147 (937),156 Sportwagon (932),156 (932)

49030HPS **Stange/Strebe, Stabilisator, Link Stabiliser, Entretoise/tige, stabilisateur**

ALFA ROMEO 156 (932)

49031 **Stange/Strebe, Stabilisator, Link Stabiliser, Entretoise/tige, stabilisateur**

ALFA ROMEO GT,147 (937),156 Sportwagon (932),156 (932)

49032HPS **Stange/Strebe, Stabilisator, Link Stabiliser, Entretoise/tige, stabilisateur**

ALFA ROMEO 166 (936)

49033 **Stange/Strebe, Stabilisator, Link Stabiliser, Entretoise/tige, stabilisateur**

ALFA ROMEO 166 (936)

49034 **Stange/Strebe, Stabilisator, Link Stabiliser, Entretoise/tige, stabilisateur**

ALFA ROMEO 166 (936)

49036 **Lenker, Radaufhängung, Track Control Arm, Bras de liaison, suspension de roue**

FIAT DOBLO Cargo (223),DOBLO (119),PALIO Weekend (178DX),SIENA (178_),STRADA (178E)

49037 **Lenker, Radaufhängung, Track Control Arm, Bras de liaison, suspension de roue**

FIAT DOBLO Cargo (223),DOBLO (119),PALIO Weekend (178DX),SIENA (178_),STRADA (178E)

49038 **Trag-/Führungsgelenk, Ball Joint, Rotule de suspension**

FIAT DOBLO Cargo (223),DOBLO (119),STRADA (178E)

49039HPS	**Stange/Strebe, Stabilisator, Link Stabiliser, Entretoise/tige, stabilisateur**
	FIAT DOBLO Cargo (223),DOBLO (119)
49040	**Spurstangenkopf, Tie Rod End, Rotule de barre de connexion**
	FIAT STILO Multi Wagon (192),STILO (192)
49041	**Lenker, Radaufhängung, Track Control Arm, Bras de liaison, suspension de roue**
	FIAT STILO Multi Wagon (192),STILO (192)
49042	**Lenker, Radaufhängung, Track Control Arm, Bras de liaison, suspension de roue**
	FIAT STILO Multi Wagon (192),STILO (192)
49043	**Axialgelenk, Spurstange, Inner Tie Rod, Rotule de direction intérieure, barre de connexion**
	FIAT STILO (192)
49044	**Lenker, Radaufhängung, Track Control Arm, Bras de liaison, suspension de roue**
	FIAT PUNTO Van (188AX),PUNTO (188)
49045	**Lenker, Radaufhängung, Track Control Arm, Bras de liaison, suspension de roue**
	FIAT PUNTO Van (188AX),PUNTO (188)
49046	**Stange/Strebe, Stabilisator, Link Stabiliser, Entretoise/tige, stabilisateur**
	ALFA ROMEO GTV (916C_),SPIDER (916S_)
49047	**Stange/Strebe, Stabilisator, Link Stabiliser, Entretoise/tige, stabilisateur**
	ALFA ROMEO GTV (916C_),SPIDER (916S_)
49048	**Stange/Strebe, Stabilisator, Link Stabiliser, Entretoise/tige, stabilisateur**
	ALFA ROMEO GTV (916C_)
49050	**Trag-/Führungsgelenk, Ball Joint, Rotule de suspension**
	ALFA ROMEO ALFETTA GT (116),ALFETTA (116),GIULIETTA (116),75 (162B),90 (162),AUSTIN MAESTRO (XC)
49051	**Lenker, Radaufhängung, Track Control Arm, Bras de liaison, suspension de roue**
	FIAT PALIO Weekend (178DX)
49052	**Lenker, Radaufhängung, Track Control Arm, Bras de liaison, suspension de roue**
	FIAT PALIO Weekend (178DX)
49053	**Axialgelenk, Spurstange, Inner Tie Rod, Rotule de direction intérieure, barre de connexion**
	ALFA ROMEO GTV (916C_),SPIDER (916S_),145 (930),146 (930),155 (167)
49054	**Lenker, Radaufhängung, Track Control Arm, Bras de liaison, suspension de roue**
	FIAT PANDA (169)
49055	**Lenker, Radaufhängung, Track Control Arm, Bras de liaison, suspension de roue**
	FIAT PANDA (169)
49057	**Spurstangenkopf, Tie Rod End, Rotule de barre de connexion**
	FIAT PANDA (169),500,FORD KA
49058	**Spurstangenkopf, Tie Rod End, Rotule de barre de connexion**
	FIAT PANDA (169),500,FORD KA
49059	**Spurstangenkopf, Tie Rod End, Rotule de barre de connexion**
	FIAT IDEA,LANCIA MUSA
49060	**Lenker, Radaufhängung, Track Control Arm, Bras de liaison, suspension de roue**
	FIAT PUNTO Cabriolet (176C),PUNTO Van (176L),PUNTO (176),LANCIA Y (840A)
49061	**Lenker, Radaufhängung, Track Control Arm, Bras de liaison, suspension de roue**
	FIAT PUNTO Cabriolet (176C),PUNTO Van (176L),PUNTO (176),LANCIA Y (840A)
49062	**Lenker, Radaufhängung, Track Control Arm, Bras de liaison, suspension de roue**
	FIAT PUNTO Cabriolet (176C),PUNTO Van (176L),PUNTO (176),LANCIA Y (840A)
49063	**Lenker, Radaufhängung, Track Control Arm, Bras de liaison, suspension de roue**
	FIAT PUNTO Cabriolet (176C),PUNTO Van (176L),PUNTO (176),LANCIA Y (840A)
49064	**Lenker, Radaufhängung, Track Control Arm, Bras de liaison, suspension de roue**
	FIAT MULTIPLA (186),LANCIA LYBRA SW (839BX),LYBRA (839AX)
49065	**Lenker, Radaufhängung, Track Control Arm, Bras de liaison, suspension de roue**
	FIAT MULTIPLA (186),LANCIA LYBRA SW (839BX),LYBRA (839AX)
49066	**Stange/Strebe, Stabilisator, Link Stabiliser, Entretoise/tige, stabilisateur**
	FIAT PANDA (169)
49066HPS	**Stange/Strebe, Stabilisator, Link Stabiliser, Entretoise/tige, stabilisateur**
	FIAT PANDA (169)
49067	**Stange/Strebe, Stabilisator, Link Stabiliser, Entretoise/tige, stabilisateur**
	ALFA ROMEO 147 (937),156 Sportwagon (932),156 (932)
49068	**Stange/Strebe, Stabilisator, Link Stabiliser, Entretoise/tige, stabilisateur**
	ALFA ROMEO 147 (937),156 Sportwagon (932),156 (932)

49069 **Trag-/Führungsgelenk, Ball Joint, Rotule de suspension**

FIAT DOBLO Cargo (223),DOBLO (119),PALIO Weekend (178DX),STRADA (178E)

49070 **Axialgelenk, Spurstange, Inner Tie Rod, Rotule de direction intérieure, barre de connexion**

FIAT PALIO Weekend (178DX),STRADA (178E)

49071 **Axialgelenk, Spurstange, Inner Tie Rod, Rotule de direction intérieure, barre de connexion**

FIAT IDEA,LANCIA MUSA,YPSILON

49072 **Axialgelenk, Spurstange, Inner Tie Rod, Rotule de direction intérieure, barre de connexion**

FIAT PANDA (169)

49073 **Spurstangenkopf, Tie Rod End, Rotule de barre de connexion**

FIAT FIORINO Kasten (146 Uno),FIORINO Pick up (146)

49074 **Spurstangenkopf, Tie Rod End, Rotule de barre de connexion**

FIAT DOBLO Cargo (223),DOBLO (119)

49075 **Spurstangenkopf, Tie Rod End, Rotule de barre de connexion**

FIAT DOBLO Cargo (223),DOBLO (119)

49076 **Lenker, Radaufhängung, Track Control Arm, Bras de liaison, suspension de roue**

FIAT CINQUECENTO (170),SEICENTO (187)

49077 **Lenker, Radaufhängung, Track Control Arm, Bras de liaison, suspension de roue**

FIAT CINQUECENTO (170),SEICENTO (187)

49078 **Lenker, Radaufhängung, Track Control Arm, Bras de liaison, suspension de roue**

FIAT IDEA,LANCIA MUSA,YPSILON

49079 **Lenker, Radaufhängung, Track Control Arm, Bras de liaison, suspension de roue**

FIAT IDEA,LANCIA MUSA,YPSILON

49080 **Lenker, Radaufhängung, Track Control Arm, Bras de liaison, suspension de roue**

ALFA ROMEO 166 (936)

49081 **Lenker, Radaufhängung, Track Control Arm, Bras de liaison, suspension de roue**

ALFA ROMEO 166 (936)

49082 **Lenker, Radaufhängung, Track Control Arm, Bras de liaison, suspension de roue**

CITROËN C8 (EA_, EB_),FIAT ULYSSE (179AX),LANCIA PHEDRA (179),PEUGEOT 807 (E)

49083 **Lenker, Radaufhängung, Track Control Arm, Bras de liaison, suspension de roue**

CITROËN C8 (EA_, EB_),FIAT ULYSSE (179AX),LANCIA PHEDRA (179),PEUGEOT 807 (E)

49084 **Lenker, Radaufhängung, Track Control Arm, Bras de liaison, suspension de roue**

CITROËN JUMPER Bus (230P),JUMPER Bus (244, Z_),JUMPER Kasten (230L),JUMPER Kasten (244),JUMPER Pritsche/Fahrgestell (230),JUMPER Pritsche/Fahrgestell (244),FIAT DUCATO Bus (230),DUCATO Bus (244, Z_),DUCATO Kasten (230L),DUCATO Kasten (244),DUCATO Pritsche/Fahrgestell (230),DUCATO Pritsche/Fahrgestell (244),PEUGEOT BOXER Bus (230P),BOXER Bus (244, Z_),BOXER Kasten (230L),BOXER Kasten (244),BOXER Pritsche/Fahrgestell (ZCT_),BOXER Pritsche/Fahrgestell (244)

49085 **Lenker, Radaufhängung, Track Control Arm, Bras de liaison, suspension de roue**

CITROËN JUMPER Bus (230P),JUMPER Bus (244, Z_),JUMPER Kasten (230L),JUMPER Kasten (244),JUMPER Pritsche/Fahrgestell (230),JUMPER Pritsche/Fahrgestell (244),FIAT DUCATO Bus (230),DUCATO Bus (244, Z_),DUCATO Kasten (230L),DUCATO Kasten (244),DUCATO Pritsche/Fahrgestell (230),DUCATO Pritsche/Fahrgestell (244),PEUGEOT BOXER Bus (230P),BOXER Bus (244, Z_),BOXER Kasten (230L),BOXER Kasten (244),BOXER Pritsche/Fahrgestell (ZCT_),BOXER Pritsche/Fahrgestell (244)

49086 **Lenker, Radaufhängung, Track Control Arm, Bras de liaison, suspension de roue**

CITROËN JUMPER Bus (230P),JUMPER Bus (244, Z_),JUMPER Kasten (230L),JUMPER Kasten (244),JUMPER Pritsche/Fahrgestell (230),JUMPER Pritsche/Fahrgestell (244),FIAT DUCATO Bus (230),DUCATO Bus (244, Z_),DUCATO Kasten (230L),DUCATO Kasten (244),DUCATO Pritsche/Fahrgestell (230),DUCATO Pritsche/Fahrgestell (244),PEUGEOT BOXER Bus (244, Z_),BOXER Kasten (244),BOXER Pritsche/Fahrgestell (244)

49087 **Lenker, Radaufhängung, Track Control Arm, Bras de liaison, suspension de roue**

CITROËN JUMPER Bus (230P),JUMPER Bus (244, Z_),JUMPER Kasten (230L),JUMPER Kasten (244),JUMPER Pritsche/Fahrgestell (230),JUMPER Pritsche/Fahrgestell (244),FIAT DUCATO Bus (230),DUCATO Bus (244, Z_),DUCATO Kasten (230L),DUCATO Kasten (244),DUCATO Pritsche/Fahrgestell (230),DUCATO Pritsche/Fahrgestell (244),PEUGEOT BOXER Bus (244, Z_),BOXER Kasten (244),BOXER Pritsche/Fahrgestell (244)

49088 **Stange/Strebe, Stabilisator, Link Stabiliser, Entretoise/tige, stabilisateur**

LANCIA KAPPA Coupe (838),KAPPA SW (838B),KAPPA (838A)

49089 **Lenker, Radaufhängung, Track Control Arm, Bras de liaison, suspension de roue**

FIAT DOBLO Cargo (223),DOBLO (119)

49090 **Lenker, Radaufhängung, Track Control Arm, Bras de liaison, suspension de roue**

FIAT DOBLO Cargo (223),DOBLO (119)

49091 **Axialgelenk, Spurstange, Inner Tie Rod, Rotule de direction intérieure, barre de connexion**

FIAT PALIO Weekend (178DX),PALIO (178BX),SIENA (178_),STRADA (178E)

49092 **Trag-/Führungsgelenk, Ball Joint, Rotule de suspension**

ALFA ROMEO MITO,CITROËN NEMO Kasten (AA_),FIAT FIORINO Kasten,GRANDE PUNTO (199),LINEA,OPEL CORSA D,PEUGEOT BIPPER (AA_)

49093 **Axialgelenk, Spurstange, Inner Tie Rod, Rotule de direction intérieure, barre de connexion**

FIAT DOBLO Cargo (223),DOBLO (119)

49094 **Lenker, Radaufhängung, Track Control Arm, Bras de liaison, suspension de roue**

FIAT BRAVO,STILO Multi Wagon (192),STILO (192),LANCIA DELTA III

49095	**Lenker, Radaufhängung, Track Control Arm, Bras de liaison, suspension de roue**
	FIAT BRAVO,STILO Multi Wagon (192),STILO (192),LANCIA DELTA III
49096	**Lenker, Radaufhängung, Track Control Arm, Bras de liaison, suspension de roue**
	FIAT 500,500 C
49097	**Lenker, Radaufhängung, Track Control Arm, Bras de liaison, suspension de roue**
	FIAT 500,500 C
49098	**Spurstangenkopf, Tie Rod End, Rotule de barre de connexion**
	FIAT MAREA Weekend (185),MAREA (185),LANCIA LYBRA SW (839BX),LYBRA (839AX)
49099	**Trag-/Führungsgelenk, Ball Joint, Rotule de suspension**
	CITROËN JUMPER Bus,JUMPER Kasten,JUMPER Pritsche/Fahrgestell,FIAT DUCATO Bus,DUCATO Kasten,DUCATO Pritsche/Fahrgestell,PEUGEOT BOXER Bus,BOXER Kasten,BOXER Pritsche/Fahrgestell
49100	**Spurstangenkopf, Tie Rod End, Rotule de barre de connexion**
	RENAULT CLIO I (B/C57_, 5/357_),CLIO I Kasten (S57_),KANGOO (KC0/1_),KANGOO Rapid (FC0/1_),MEGANE I (BA0/1_),MEGANE I Coach (DA0/1_),MEGANE Scenic (JA0/1_)
49101	**Spurstangenkopf, Tie Rod End, Rotule de barre de connexion**
	RENAULT CLIO I (B/C57_, 5/357_),CLIO I Kasten (S57_),KANGOO (KC0/1_),KANGOO Rapid (FC0/1_),MEGANE I (BA0/1_),MEGANE I Coach (DA0/1_),MEGANE Scenic (JA0/1_)
49102	**Axialgelenk, Spurstange, Inner Tie Rod, Rotule de direction intérieure, barre de connexion**
	RENAULT CLIO I (B/C57_, 5/357_),CLIO I Kasten (S57_)
49103	**Axialgelenk, Spurstange, Inner Tie Rod, Rotule de direction intérieure, barre de connexion**
	RENAULT MEGANE I (BA0/1_),MEGANE I Cabriolet (EA0/1_),MEGANE I Classic (LA0/1_),MEGANE I Coach (DA0/1_),MEGANE I Grandtour (KA0/1_),MEGANE Scenic (JA0/1_),SCÉNIC I (JA0/1_)
49104	**Spurstangenkopf, Tie Rod End, Rotule de barre de connexion**
	RENAULT MASTER I Bus (T__),MASTER I Kasten (T__),MASTER I Pritsche/Fahrgestell (P__)
49105	**Trag-/Führungsgelenk, Ball Joint, Rotule de suspension**
	RENAULT MASTER I Bus (T__),MASTER I Kasten (T__),MASTER I Pritsche/Fahrgestell (P__)
49106	**Trag-/Führungsgelenk, Ball Joint, Rotule de suspension**
	RENAULT MASTER I Bus (T__),MASTER I Kasten (T__),MASTER I Pritsche/Fahrgestell (P__)
49107	**Spurstange, Rod Assembly, Barre de connexion**
	RENAULT RAPID Kasten (F40_, G40_),SUPER 5 (B/C40_),SUPER 5 Kasten (S40_)
49108HPS	**Stange/Strebe, Stabilisator, Link Stabiliser, Entretoise/tige, stabilisateur**
	NISSAN INTERSTAR Bus (X70),INTERSTAR Kasten (X70),OPEL MOVANO Combi (J9),MOVANO Kasten (F9),MOVANO Kipper (H9),RENAULT MASTER I Bus (T__),MASTER I Kasten (T__),MASTER I Pritsche/Fahrgestell (P__),MASTER II Bus (JD/ND),MASTER II Kasten (FD),MASTER II Pritsche/Fahrgestell (ED/HD/UD),MASTER III Bus (JD),MASTER III Kasten (HD, FD),MASTER III Pritsche/Fahrgestell (ED, UD),VAUXHALL MOVANO Chassis/Cab (ED, UD, HD),MOVANO Combi (JD),MOVANO Van (FD)
49109HPS	**Stange/Strebe, Stabilisator, Link Stabiliser, Entretoise/tige, stabilisateur**
	NISSAN INTERSTAR Bus (X70),INTERSTAR Kasten (X70),OPEL MOVANO Combi (J9),MOVANO Kasten (F9),MOVANO Kipper (H9),RENAULT MASTER I Bus (T__),MASTER I Kasten (T__),MASTER I Pritsche/Fahrgestell (P__),MASTER II Bus (JD/ND),MASTER II Kasten (FD),MASTER II Pritsche/Fahrgestell (ED/HD/UD),MASTER III Bus (JD),MASTER III Kasten (HD, FD),MASTER III Pritsche/Fahrgestell (ED, UD),VAUXHALL MOVANO Chassis/Cab (ED, UD, HD),MOVANO Combi (JD),MOVANO Van (FD)
49110	**Trag-/Führungsgelenk, Ball Joint, Rotule de suspension**
	NISSAN INTERSTAR Bus (X70),INTERSTAR Kasten (X70),OPEL MOVANO Combi (J9),MOVANO Kasten (F9),MOVANO Kipper (H9),MOVANO Pritsche/Fahrgestell (U9, E9),RENAULT MASTER II Bus (JD/ND),MASTER II Kasten (FD),MASTER II Pritsche/Fahrgestell (ED/HD/UD),MASTER III Bus (JD),MASTER III Kasten (HD, FD),MASTER III Pritsche/Fahrgestell (ED, UD)
49111	**Trag-/Führungsgelenk, Ball Joint, Rotule de suspension**
	NISSAN INTERSTAR Bus (X70),INTERSTAR Kasten (X70),OPEL MOVANO Combi (J9),MOVANO Kasten (F9),MOVANO Kipper (H9),MOVANO Pritsche/Fahrgestell (U9, E9),RENAULT MASTER II Bus (JD/ND),MASTER II Kasten (FD),MASTER II Pritsche/Fahrgestell (ED/HD/UD),MASTER III Bus (JD),MASTER III Kasten (HD, FD),MASTER III Pritsche/Fahrgestell (ED, UD)
49112	**Spurstangenkopf, Tie Rod End, Rotule de barre de connexion**
	RENAULT ESPACE III (JE0_)
49113	**Spurstangenkopf, Tie Rod End, Rotule de barre de connexion**
	RENAULT ESPACE III (JE0_)
49114	**Spurstange, Rod Assembly, Barre de connexion**
	RENAULT ESPACE III (JE0_)
49115	**Spurstange, Rod Assembly, Barre de connexion**
	RENAULT ESPACE III (JE0_)
49115/1	**Axialgelenk, Spurstange, Inner Tie Rod, Rotule de direction intérieure, barre de connexion**
	RENAULT AVANTIME (DE0_),ESPACE III (JE0_),VEL SATIS (BJ0_)
49116	**Trag-/Führungsgelenk, Ball Joint, Rotule de suspension**
	RENAULT ESPACE III (JE0_)
49117/1	**Axialgelenk, Spurstange, Inner Tie Rod, Rotule de direction intérieure, barre de connexion**
	NISSAN KUBISTAR (X76),RENAULT CLIO II (BB0/1/2_, CB0/1/2_),CLIO II Kasten (SB0/1/2_),KANGOO (KC0/1_),KANGOO Rapid (FC0/1_)
49118	**Stange/Strebe, Stabilisator, Link Stabiliser, Entretoise/tige, stabilisateur**
	NISSAN PRIMASTAR Bus (X83),PRIMASTAR Kasten (X83),OPEL VIVARO Combi (J7),VIVARO Kasten (F7),RENAULT ESPACE IV (JK0/1_),LAGUNA II (BG0/1_),LAGUNA II Grandtour (KG0/1_),TRAFIC II Bus (JL),TRAFIC II Kasten (FL),VEL SATIS (BJ0_),VAUXHALL VIVARO Combi,VIVARO Kasten

49118HPS — **Stange/Strebe, Stabilisator, Link Stabiliser, Entretoise/tige, stabilisateur**

NISSAN PRIMASTAR Bus (X83),PRIMASTAR Kasten (X83),OPEL VIVARO Combi (J7),VIVARO Kasten (F7),RENAULT ESPACE IV (JK0/1_),LAGUNA II (BG0/1_),LAGUNA II Grandtour (KG0/1_),TRAFIC II Bus (JL),TRAFIC II Kasten (FL),VEL SATIS (BJ0_),VAUXHALL VIVARO Combi,VIVARO Kasten

49119 — **Axialgelenk, Spurstange, Inner Tie Rod, Rotule de direction intérieure, barre de connexion**

RENAULT MEGANE I (BA0/1_),MEGANE I Cabriolet (EA0/1_),MEGANE I Classic (LA0/1_),MEGANE I Coach (DA0/1_),MEGANE I Grandtour (KA0/1_),MEGANE II (BM0/1_, CM0/1_),SCÉNIC I (JA0/1_)

49120 — **Stange/Strebe, Stabilisator, Link Stabiliser, Entretoise/tige, stabilisateur**

RENAULT TWINGO (C06_)

49120HPS — **Stange/Strebe, Stabilisator, Link Stabiliser, Entretoise/tige, stabilisateur**

RENAULT TWINGO (C06_)

49121 — **Stange/Strebe, Stabilisator, Link Stabiliser, Entretoise/tige, stabilisateur**

RENAULT TWINGO (C06_)

49121HPS — **Stange/Strebe, Stabilisator, Link Stabiliser, Entretoise/tige, stabilisateur**

RENAULT TWINGO (C06_)

49124HPS — **Stange/Strebe, Stabilisator, Link Stabiliser, Entretoise/tige, stabilisateur**

RENAULT GRAND SCÉNIC II (JM0/1_),MEGANE II (BM0/1_, CM0/1_),MEGANE II Coupé-Cabriolet (EM0/1_),MEGANE II Grandtour (KM0/1_),MEGANE II Stufenheck (LM0/1_),SCÉNIC II (JM0/1_)

49125 — **Axialgelenk, Spurstange, Inner Tie Rod, Rotule de direction intérieure, barre de connexion**

NISSAN INTERSTAR Bus (X70),INTERSTAR Kasten (X70),OPEL MOVANO Combi (J9),MOVANO Kasten (F9),MOVANO Kipper (H9),MOVANO Pritsche/Fahrgestell (U9, E9),RENAULT MASTER II Bus (JD/ND),MASTER II Kasten (FD),MASTER II Pritsche/Fahrgestell (ED/HD/UD),VAUXHALL MOVANO Chassis/Cab (ED, UD, HD),MOVANO Combi (JD),MOVANO Van (FD)

49126 — **Axialgelenk, Spurstange, Inner Tie Rod, Rotule de direction intérieure, barre de connexion**

RENAULT SCÉNIC I (JA0/1_)

49127 — **Lenker, Radaufhängung, Track Control Arm, Bras de liaison, suspension de roue**

RENAULT MEGANE II Coupé-Cabriolet (EM0/1_),MEGANE II Grandtour (KM0/1_),MEGANE II Stufenheck (LM0/1_)

49128 — **Lenker, Radaufhängung, Track Control Arm, Bras de liaison, suspension de roue**

RENAULT MEGANE II Coupé-Cabriolet (EM0/1_),MEGANE II Grandtour (KM0/1_),MEGANE II Stufenheck (LM0/1_)

49129 — **Lenker, Radaufhängung, Track Control Arm, Bras de liaison, suspension de roue**

RENAULT MEGANE I (BA0/1_),MEGANE I Classic (LA0/1_),MEGANE Scenic (JA0/1_),SCÉNIC I (JA0/1_)

49130 — **Lenker, Radaufhängung, Track Control Arm, Bras de liaison, suspension de roue**

RENAULT MEGANE I (BA0/1_),MEGANE I Classic (LA0/1_),MEGANE Scenic (JA0/1_),SCÉNIC I (JA0/1_)

49131 — **Lenker, Radaufhängung, Track Control Arm, Bras de liaison, suspension de roue**

RENAULT LAGUNA II (BG0/1_),LAGUNA II Grandtour (KG0/1_)

49132 — **Lenker, Radaufhängung, Track Control Arm, Bras de liaison, suspension de roue**

RENAULT LAGUNA II (BG0/1_),LAGUNA II Grandtour (KG0/1_)

49133 — **Lenker, Radaufhängung, Track Control Arm, Bras de liaison, suspension de roue**

RENAULT MEGANE II (BM0/1_, CM0/1_),MEGANE II Coupé-Cabriolet (EM0/1_),MEGANE II Grandtour (KM0/1_),MEGANE II Stufenheck (LM0/1_),SCÉNIC II (JM0/1_)

49134 — **Lenker, Radaufhängung, Track Control Arm, Bras de liaison, suspension de roue**

RENAULT MEGANE II (BM0/1_, CM0/1_),MEGANE II Coupé-Cabriolet (EM0/1_),MEGANE II Grandtour (KM0/1_),MEGANE II Stufenheck (LM0/1_),SCÉNIC II (JM0/1_)

49135 — **Spurstangenkopf, Tie Rod End, Rotule de barre de connexion**

NISSAN KUBISTAR (X76),RENAULT CLIO II (BB0/1/2_, CB0/1/2_),CLIO II Kasten (SB0/1/2_),CLIO III (BR0/1, CR0/1),KANGOO (KC0/1_),KANGOO Rapid (FC0/1_),MEGANE I (BA0/1_),MEGANE I Classic (LA0/1_),MEGANE I Coach (DA0/1_),MEGANE Scenic (JA0/1_),MODUS (F/JP0_),SCÉNIC I (JA0/1_),THALIA (LB0/1/2_),TWINGO (CN0_),TWINGO (C06_),TWINGO Kasten (S06_)

49136 — **Spurstangenkopf, Tie Rod End, Rotule de barre de connexion**

NISSAN KUBISTAR (X76),RENAULT CLIO II (BB0/1/2_, CB0/1/2_),CLIO II Kasten (SB0/1/2_),CLIO III (BR0/1, CR0/1),KANGOO (KC0/1_),KANGOO Rapid (FC0/1_),MEGANE I (BA0/1_),MEGANE I Classic (LA0/1_),MEGANE I Coach (DA0/1_),MEGANE Scenic (JA0/1_),MODUS (F/JP0_),SCÉNIC I (JA0/1_),THALIA (LB0/1/2_),TWINGO (CN0_),TWINGO (C06_),TWINGO Kasten (S06_)

49137 — **Spurstangenkopf, Tie Rod End, Rotule de barre de connexion**

NISSAN INTERSTAR Bus (X70),INTERSTAR Kasten (X70),OPEL MOVANO Combi (J9),MOVANO Kasten (F9),MOVANO Kipper (H9),MOVANO Pritsche/Fahrgestell (U9, E9),RENAULT MASTER II Bus (JD/ND),MASTER II Kasten (FD),MASTER II Pritsche/Fahrgestell (ED/HD/UD),VAUXHALL MOVANO Chassis/Cab (ED, UD, HD),MOVANO Combi (JD),MOVANO Van (FD)

49138 — **Spurstangenkopf, Tie Rod End, Rotule de barre de connexion**

NISSAN INTERSTAR Bus (X70),INTERSTAR Kasten (X70),OPEL MOVANO Combi (J9),MOVANO Kasten (F9),MOVANO Kipper (H9),MOVANO Pritsche/Fahrgestell (U9, E9),RENAULT MASTER II Bus (JD/ND),MASTER II Kasten (FD),MASTER II Pritsche/Fahrgestell (ED/HD/UD),VAUXHALL MOVANO Chassis/Cab (ED, UD, HD),MOVANO Combi (JD),MOVANO Van (FD)

49139 — **Trag-/Führungsgelenk, Ball Joint, Rotule de suspension**

RENAULT MEGANE Scenic (JA0/1_)

49140 — **Trag-/Führungsgelenk, Ball Joint, Rotule de suspension**

NISSAN PRIMASTAR Bus (X83),PRIMASTAR Kasten (X83),OPEL VIVARO Combi (J7),VIVARO Kasten (F7),RENAULT ESPACE IV (JK0/1_),LAGUNA II (BG0/1_),LAGUNA II Grandtour (KG0/1_),TRAFIC II Bus (JL),TRAFIC II Kasten (FL),TRAFIC II Pritsche/Fahrgestell (EL),VEL SATIS (BJ0_),VAUXHALL VIVARO Combi,VIVARO Kasten

49141 — **Lenker, Radaufhängung, Track Control Arm, Bras de liaison, suspension de roue**

NISSAN PRIMASTAR Bus (X83),PRIMASTAR Kasten (X83),OPEL VIVARO Combi (J7),VIVARO Kasten (F7),RENAULT TRAFIC II Bus (JL),TRAFIC II Kasten (FL),TRAFIC II Pritsche/Fahrgestell (EL)

49142 — **Lenker, Radaufhängung, Track Control Arm, Bras de liaison, suspension de roue**

NISSAN PRIMASTAR Bus (X83),PRIMASTAR Kasten (X83),OPEL VIVARO Combi (J7),VIVARO Kasten (F7),RENAULT TRAFIC II Bus (JL),TRAFIC II Kasten (FL),TRAFIC II Pritsche/Fahrgestell (EL)

49143 **Spurstangenkopf, Tie Rod End, Rotule de barre de connexion**

NISSAN PRIMASTAR Bus (X83),PRIMASTAR Kasten (X83),OPEL VIVARO Combi (J7),VIVARO Kasten (F7),RENAULT ESPACE IV (JK0/1_),LAGUNA II (BG0/1_),LAGUNA II Grandtour (KG0/1_),TRAFIC II Bus (JL),TRAFIC II Kasten (FL),TRAFIC II Pritsche/Fahrgestell (EL),VEL SATIS (BJ0_),VAUXHALL VIVARO Combi,VIVARO Kasten

49144 **Spurstangenkopf, Tie Rod End, Rotule de barre de connexion**

NISSAN PRIMASTAR Bus (X83),PRIMASTAR Kasten (X83),OPEL VIVARO Combi (J7),VIVARO Kasten (F7),RENAULT ESPACE IV (JK0/1_),LAGUNA II (BG0/1_),LAGUNA II Grandtour (KG0/1_),TRAFIC II Bus (JL),TRAFIC II Kasten (FL),TRAFIC II Pritsche/Fahrgestell (EL),VEL SATIS (BJ0_),VAUXHALL VIVARO Combi,VIVARO Kasten

49145 **Axialgelenk, Spurstange, Inner Tie Rod, Rotule de direction intérieure, barre de connexion**

RENAULT LAGUNA II (BG0/1_),LAGUNA II Grandtour (KG0/1_)

49146 **Stange/Strebe, Stabilisator, Link Stabiliser, Entretoise/tige, stabilisateur**

RENAULT KANGOO (KC0/1_),KANGOO Rapid (FC0/1_),SCÉNIC I (JA0/1_)

49146HPS **Stange/Strebe, Stabilisator, Link Stabiliser, Entretoise/tige, stabilisateur**

RENAULT KANGOO (KC0/1_),KANGOO Rapid (FC0/1_),SCÉNIC I (JA0/1_)

49147 **Spurstangenkopf, Tie Rod End, Rotule de barre de connexion**

RENAULT MEGANE II (BM0/1_, CM0/1_),MEGANE II Coupé-Cabriolet (EM0/1_),MEGANE II Grandtour (KM0/1_),MEGANE II Stufenheck (LM0/1_),SCÉNIC II (JM0/1_)

49148 **Spurstangenkopf, Tie Rod End, Rotule de barre de connexion**

RENAULT MEGANE II (BM0/1_, CM0/1_),MEGANE II Coupé-Cabriolet (EM0/1_),MEGANE II Grandtour (KM0/1_),MEGANE II Stufenheck (LM0/1_),SCÉNIC II (JM0/1_)

49149 **Axialgelenk, Spurstange, Inner Tie Rod, Rotule de direction intérieure, barre de connexion**

RENAULT MEGANE II (BM0/1_, CM0/1_),MEGANE II Grandtour (KM0/1_),MEGANE II Stufenheck (LM0/1_)

49150 **Trag-/Führungsgelenk, Ball Joint, Rotule de suspension**

RENAULT MEGANE II (BM0/1_, CM0/1_)

49151 **Trag-/Führungsgelenk, Ball Joint, Rotule de suspension**

DACIA LOGAN,LOGAN MCV,SANDERO,NISSAN MICRA (K12),NOTE (E11),RENAULT CLIO III (BR0/1, CR0/1),GRAND SCÉNIC II (JM0/1_),LOGAN Kombi (KS_),LOGAN (LS_),MEGANE II (BM0/1_, CM0/1_),MEGANE II Coupé-Cabriolet (EM0/1_),MEGANE II Grandtour (KM0/1_),MEGANE II Stufenheck (LM0/1_),MODUS (F/JP0_),SCÉNIC II (JM0/1_)

49152 **Lenker, Radaufhängung, Track Control Arm, Bras de liaison, suspension de roue**

RENAULT CLIO Grandtour (KR0/1_),CLIO II Kasten (SB0/1/2_),CLIO III (BR0/1, CR0/1),MODUS (F/JP0_)

49153 **Lenker, Radaufhängung, Track Control Arm, Bras de liaison, suspension de roue**

RENAULT CLIO Grandtour (KR0/1_),CLIO II Kasten (SB0/1/2_),CLIO III (BR0/1, CR0/1),MODUS (F/JP0_)

49154HPS **Stange/Strebe, Stabilisator, Link Stabiliser, Entretoise/tige, stabilisateur**

RENAULT MEGANE II (BM0/1_, CM0/1_)

49155 **Axialgelenk, Spurstange, Inner Tie Rod, Rotule de direction intérieure, barre de connexion**

NISSAN PRIMASTAR Bus (X83),PRIMASTAR Kasten (X83),OPEL VIVARO Combi (J7),VIVARO Kasten (F7),RENAULT ESPACE IV (JK0/1_),TRAFIC II Bus (JL),TRAFIC II Kasten (FL),TRAFIC II Pritsche/Fahrgestell (EL),TRAFIC Pritsche/Fahrgestell (P6)

49156 **Trag-/Führungsgelenk, Ball Joint, Rotule de suspension**

NISSAN INTERSTAR Bus (X70),INTERSTAR Kasten (X70),INTERSTAR Pritsche/Fahrgestell,OPEL MOVANO Combi (J9),MOVANO Kasten (F9),MOVANO Kipper (H9),MOVANO Pritsche/Fahrgestell (U9, E9),RENAULT MASTER II Bus (JD/ND),MASTER II Kasten (FD),MASTER II Pritsche/Fahrgestell (ED/HD/UD),MASTER III Bus (JD),MASTER III Kasten (HD, FD),MASTER III Pritsche/Fahrgestell (ED, UD),VAUXHALL MOVANO Chassis/Cab (ED, UD, HD),MOVANO Combi (JD),MOVANO Van (FD)

49157 **Spurstangenkopf, Tie Rod End, Rotule de barre de connexion**

RENAULT KANGOO Express (FW0/1_),KANGOO (KW0/1_)

49158 **Spurstangenkopf, Tie Rod End, Rotule de barre de connexion**

RENAULT KANGOO Express (FW0/1_),KANGOO (KW0/1_)

49159 **Axialgelenk, Spurstange, Inner Tie Rod, Rotule de direction intérieure, barre de connexion**

NISSAN MICRA C+C (K12),MICRA (K12),RENAULT CLIO Grandtour (KR0/1_),CLIO III (BR0/1, CR0/1),MODUS (F/JP0_)

49160 **Stange/Strebe, Stabilisator, Link Stabiliser, Entretoise/tige, stabilisateur**

DACIA LOGAN,LOGAN MCV,SANDERO,RENAULT LOGAN Kombi (KS_),LOGAN (LS_)

49161 **Axialgelenk, Spurstange, Inner Tie Rod, Rotule de direction intérieure, barre de connexion**

RENAULT FLUENCE,GRAND SCÉNIC III (JZ0/1_),KANGOO BE BOP (KW0/1_),KANGOO Express (FW0/1_),KANGOO (KW0/1_),MEGANE III Coupe (DZ0_),MEGANE III Kombi (KZ0/1),MEGANE III Schrägheck (BZ0_),MEGANE III Stufenheck,SCÉNIC III (JZ0/1_)

49162 **Trag-/Führungsgelenk, Ball Joint, Rotule de suspension**

RENAULT KANGOO BE BOP (KW0/1_),KANGOO Express (FW0/1_),KANGOO (KW0/1_)

49163 **Trag-/Führungsgelenk, Ball Joint, Rotule de suspension**

RENAULT KANGOO BE BOP (KW0/1_),KANGOO Express (FW0/1_),KANGOO (KW0/1_)

49190 **Lenker, Radaufhängung, Track Control Arm, Bras de liaison, suspension de roue**

DACIA LOGAN,LOGAN MCV,SANDERO,RENAULT LOGAN Kombi (KS_),LOGAN (LS_)

49191 **Lenker, Radaufhängung, Track Control Arm, Bras de liaison, suspension de roue**

DACIA LOGAN,LOGAN MCV,SANDERO,RENAULT LOGAN Kombi (KS_),LOGAN (LS_)

49192 **Spurstangenkopf, Tie Rod End, Rotule de barre de connexion**

DACIA LOGAN,LOGAN MCV,SANDERO,RENAULT LOGAN Kombi (KS_),LOGAN (LS_)

49193 **Spurstangenkopf, Tie Rod End, Rotule de barre de connexion**

DACIA LOGAN,LOGAN MCV,SANDERO,RENAULT LOGAN Kombi (KS_),LOGAN (LS_)

49194 — **Axialgelenk, Spurstange, Inner Tie Rod, Rotule de direction intérieure, barre de connexion**

DACIA LOGAN,LOGAN MCV,RENAULT LOGAN Kombi (KS_),LOGAN (LS_)

49200HPS — **Stange/Strebe, Stabilisator, Link Stabiliser, Entretoise/tige, stabilisateur**

HONDA CIVIC IV Coupe (EJ),CIVIC IV Fastback (MA, MB),CIVIC V Aerodeck,CIVIC V Coupe (EJ6, EJ8),CIVIC V (EJ9, EK3/4),CIVIC V Fastback (MB),CIVIC V Hatchback (EJ9, EK1/3/4),CIVIC VI Coupe (EM),CIVIC VI Hatchback (EU, EP, ES),CR-V I (RD)

49201 — **Stange/Strebe, Stabilisator, Link Stabiliser, Entretoise/tige, stabilisateur**

HONDA CIVIC IV Coupe (EJ),CIVIC IV Fastback (MA, MB),CIVIC V Aerodeck,CIVIC V Fastback (MB),CIVIC VI Coupe (EM),CIVIC VI Hatchback (EU, EP, ES)

49202 — **Stange/Strebe, Stabilisator, Link Stabiliser, Entretoise/tige, stabilisateur**

HONDA CIVIC IV Coupe (EJ),CIVIC IV Fastback (MA, MB),CIVIC V Aerodeck,CIVIC V Fastback (MB),CIVIC VI Coupe (EM),CIVIC VI Hatchback (EU, EP, ES)

49203 — **Lenker, Radaufhängung, Track Control Arm, Bras de liaison, suspension de roue**

HONDA ACCORD IV Coupe (CC1),ACCORD V Aerodeck (CE),ACCORD V (CC7, CD),ACCORD V Coupe (CD7, CD9),ACCORD VI (CE, CF),ROVER 600 (RH)

49204 — **Lenker, Radaufhängung, Track Control Arm, Bras de liaison, suspension de roue**

HONDA ACCORD IV Coupe (CC1),ACCORD V Aerodeck (CE),ACCORD V (CC7, CD),ACCORD V Coupe (CD7, CD9),ACCORD VI (CE, CF),ROVER 600 (RH)

49205 — **Lenker, Radaufhängung, Track Control Arm, Bras de liaison, suspension de roue**

HONDA ACCORD V Aerodeck (CE),ACCORD V Coupe (CD7, CD9)

49206 — **Lenker, Radaufhängung, Track Control Arm, Bras de liaison, suspension de roue**

HONDA ACCORD V Aerodeck (CE),ACCORD V Coupe (CD7, CD9)

49209 — **Lenker, Radaufhängung, Track Control Arm, Bras de liaison, suspension de roue**

HONDA ACCORD V Aerodeck (CE)

49210 — **Lenker, Radaufhängung, Track Control Arm, Bras de liaison, suspension de roue**

HONDA ACCORD V Aerodeck (CE)

49211 — **Lenker, Radaufhängung, Track Control Arm, Bras de liaison, suspension de roue**

HONDA ACCORD VII (CG, CK),ACCORD VII Hatchback (CH)

49212 — **Lenker, Radaufhängung, Track Control Arm, Bras de liaison, suspension de roue**

HONDA ACCORD VII (CG, CK),ACCORD VII Hatchback (CH)

49213 — **Lenker, Radaufhängung, Track Control Arm, Bras de liaison, suspension de roue**

HONDA ACCORD VII (CG, CK),ACCORD VII Hatchback (CH)

49214 — **Lenker, Radaufhängung, Track Control Arm, Bras de liaison, suspension de roue**

HONDA ACCORD VII (CG, CK),ACCORD VII Hatchback (CH)

49215 — **Lenker, Radaufhängung, Track Control Arm, Bras de liaison, suspension de roue**

HONDA CIVIC IV Coupe (EJ),CIVIC IV (EG, EH),CIVIC IV Fastback (MA, MB),CIVIC IV Hatchback (EG),CRX III (EH, EG),INTEGRA Coupe (DC2, DC4),ROVER 400 Hatchback (RT),400 (RT),45 (RT),45 Stufenheck (RT)

49216 — **Lenker, Radaufhängung, Track Control Arm, Bras de liaison, suspension de roue**

HONDA CIVIC IV Coupe (EJ),CIVIC IV (EG, EH),CIVIC IV Fastback (MA, MB),CIVIC IV Hatchback (EG),CRX III (EH, EG),INTEGRA Coupe (DC2, DC4),ROVER 400 Hatchback (RT),400 (RT),45 (RT),45 Stufenheck (RT)

49217 — **Lenker, Radaufhängung, Track Control Arm, Bras de liaison, suspension de roue**

HONDA CR-V I (RD)

49218 — **Lenker, Radaufhängung, Track Control Arm, Bras de liaison, suspension de roue**

HONDA CR-V I (RD)

49219 — **Stange/Strebe, Stabilisator, Link Stabiliser, Entretoise/tige, stabilisateur**

NISSAN MAXIMA QX (A32),MAXIMA Station Wagon

49220 — **Lenker, Radaufhängung, Track Control Arm, Bras de liaison, suspension de roue**

INFINITI I30,J30,NISSAN BLUEBIRD Hatchback (T72, T12),MAXIMA QX (A32),MAXIMA Station Wagon

49221 — **Lenker, Radaufhängung, Track Control Arm, Bras de liaison, suspension de roue**

INFINITI I30,J30,NISSAN BLUEBIRD Hatchback (T72, T12),MAXIMA QX (A32),MAXIMA Station Wagon

49222HPS — **Stange/Strebe, Stabilisator, Link Stabiliser, Entretoise/tige, stabilisateur**

NISSAN MAXIMA QX (A32),MAXIMA Station Wagon

49223 — **Stange/Strebe, Stabilisator, Link Stabiliser, Entretoise/tige, stabilisateur**

NISSAN PATHFINDER (R50)

49223HPS — **Stange/Strebe, Stabilisator, Link Stabiliser, Entretoise/tige, stabilisateur**

NISSAN PATHFINDER (R50)

49224 — **Stange/Strebe, Stabilisator, Link Stabiliser, Entretoise/tige, stabilisateur**

NISSAN PATHFINDER (R50)

49224HPS — **Stange/Strebe, Stabilisator, Link Stabiliser, Entretoise/tige, stabilisateur**

NISSAN PATHFINDER (R50)

49226HPS — **Stange/Strebe, Stabilisator, Link Stabiliser, Entretoise/tige, stabilisateur**

FORD MAVERICK (UDS, UNS),NISSAN TERRANO II (R20)

49227HPS — **Stange/Strebe, Stabilisator, Link Stabiliser, Entretoise/tige, stabilisateur**

FORD MAVERICK (UDS, UNS),NISSAN TERRANO II (R20)

49228	**Stange/Strebe, Stabilisator, Link Stabiliser, Entretoise/tige, stabilisateur**
	NISSAN MICRA (K11)
49229	**Stange/Strebe, Stabilisator, Link Stabiliser, Entretoise/tige, stabilisateur**
	NISSAN PATROL GR II (Y61)
49230	**Lenker, Radaufhängung, Track Control Arm, Bras de liaison, suspension de roue**
	MAZDA 323 C IV (BG)
49231	**Lenker, Radaufhängung, Track Control Arm, Bras de liaison, suspension de roue**
	MAZDA 323 C IV (BG)
49232	**Stange/Strebe, Stabilisator, Link Stabiliser, Entretoise/tige, stabilisateur**
	MAZDA MX-5 II (NB)
49233	**Lenker, Radaufhängung, Track Control Arm, Bras de liaison, suspension de roue**
	MAZDA 6 (GG)
49234	**Lenker, Radaufhängung, Track Control Arm, Bras de liaison, suspension de roue**
	MAZDA 6 (GG)
49235	**Lenker, Radaufhängung, Track Control Arm, Bras de liaison, suspension de roue**
	MAZDA 6 (GG)
49236	**Lenker, Radaufhängung, Track Control Arm, Bras de liaison, suspension de roue**
	MAZDA MPV I (LV)
49237	**Stange/Strebe, Stabilisator, Link Stabiliser, Entretoise/tige, stabilisateur**
	TOYOTA RAV 4 II (XA2)
49237HPS	**Stange/Strebe, Stabilisator, Link Stabiliser, Entretoise/tige, stabilisateur**
	TOYOTA RAV 4 II (XA2)
49238	**Stange/Strebe, Stabilisator, Link Stabiliser, Entretoise/tige, stabilisateur**
	TOYOTA RAV 4 II (XA2)
49239	**Stange/Strebe, Stabilisator, Link Stabiliser, Entretoise/tige, stabilisateur**
	TOYOTA RAV 4 II (XA2)
49240	**Stange/Strebe, Stabilisator, Link Stabiliser, Entretoise/tige, stabilisateur**
	MITSUBISHI PAJERO II Canvas Top (V2_W, V4_W),PAJERO II (V2_W, V4_W)
49241	**Lenker, Radaufhängung, Track Control Arm, Bras de liaison, suspension de roue**
	MITSUBISHI ECLIPSE I (D2_A),ECLIPSE II (D3_),GALANT V (E5_A, E7_A, E8_A),GALANT V Stufenheck (E5_A, E7_A, E8_A),GALANT VI (EA_),GALANT VI Station Wagon (EA_)
49242	**Lenker, Radaufhängung, Track Control Arm, Bras de liaison, suspension de roue**
	MITSUBISHI ECLIPSE I (D2_A),ECLIPSE II (D3_),GALANT V (E5_A, E7_A, E8_A),GALANT V Stufenheck (E5_A, E7_A, E8_A),GALANT VI (EA_),GALANT VI Station Wagon (EA_)
49243	**Lenker, Radaufhängung, Track Control Arm, Bras de liaison, suspension de roue**
	MITSUBISHI GALANT V (E5_A, E7_A, E8_A),GALANT V Stufenheck (E5_A, E7_A, E8_A)
49244	**Lenker, Radaufhängung, Track Control Arm, Bras de liaison, suspension de roue**
	MITSUBISHI GALANT V (E5_A, E7_A, E8_A),GALANT V Stufenheck (E5_A, E7_A, E8_A)
49245	**Stange/Strebe, Stabilisator, Link Stabiliser, Entretoise/tige, stabilisateur**
	MITSUBISHI CARISMA (DA_),CARISMA Stufenheck (DA_)
49247	**Trag-/Führungsgelenk, Ball Joint, Rotule de suspension**
	MITSUBISHI L 300 Bus (LO3_P/G, L0_2P),L 300 Bus (P0_W, P1_W, P2_W),L 300 Kasten (P0_W, P1_W)
49248	**Trag-/Führungsgelenk, Ball Joint, Rotule de suspension**
	HYUNDAI H100 Bus (P),H100 Kasten,MITSUBISHI L 300 Bus (P0_W, P1_W, P2_W),L 300 Kasten (P0_W, P1_W),L 300 Pritsche/Fahrgestell (P1_T)
49249	**Spurstangenkopf, Tie Rod End, Rotule de barre de connexion**
	MITSUBISHI L 300 Bus (LO3_P/G, L0_2P),L 300 Bus (P0_W, P1_W, P2_W)
49250HPS	**Stange/Strebe, Stabilisator, Link Stabiliser, Entretoise/tige, stabilisateur**
	HYUNDAI ACCENT (LC),ACCENT Stufenheck (LC),ACCENT Stufenheck (X-3),ACCENT (X-3),MATRIX (FC),MITSUBISHI OUTLANDER I
49251HPS	**Stange/Strebe, Stabilisator, Link Stabiliser, Entretoise/tige, stabilisateur**
	HYUNDAI ACCENT (LC),ACCENT Stufenheck (LC),MATRIX (FC),MITSUBISHI OUTLANDER I
49252	**Stange/Strebe, Stabilisator, Link Stabiliser, Entretoise/tige, stabilisateur**
	HYUNDAI ACCENT (LC)
49253	**Stange/Strebe, Stabilisator, Link Stabiliser, Entretoise/tige, stabilisateur**
	HYUNDAI COUPE (RD),LANTRA II (J-2),LANTRA II Wagon (J2)
49254	**Stange/Strebe, Stabilisator, Link Stabiliser, Entretoise/tige, stabilisateur**
	HYUNDAI COUPE (RD),LANTRA II (J-2),LANTRA II Wagon (J2)
49254HPS	**Stange/Strebe, Stabilisator, Link Stabiliser, Entretoise/tige, stabilisateur**
	HYUNDAI COUPE (RD),LANTRA II (J-2),LANTRA II Wagon (J2)
49255	**Trag-/Führungsgelenk, Ball Joint, Rotule de suspension**
	HYUNDAI ACCENT (LC),ACCENT Stufenheck (LC),ACCENT Stufenheck (X-3),ACCENT (X-3),COUPE (GK),COUPE (RD),ELANTRA Stufenheck (XD),ELANTRA (XD),GETZ (TB),LANTRA II (J-2),LANTRA II Wagon (J2),MATRIX (FC),SONATA I (Y-2)

49256	**Spurstangenkopf, Tie Rod End, Rotule de barre de connexion**
	HYUNDAI LANTRA II (J-2),LANTRA II Wagon (J2),SONATA I (Y-2),SONATA II (Y-3),MITSUBISHI CORDIA (A21_A, AB),ECLIPSE I (D2_A),ECLIPSE II (D3_),GALANT III (E1_A),GALANT IV (E3_A),GALANT IV Stufenheck (E3_A),GALANT V (E5_A, E7_A, E8_A),GALANT V Stufenheck (E5_A, E7_A, E8_A),SAPPORO III (E16A),SIGMA (F16A),SIGMA Station Wagon (F07W),SPACE RUNNER (N1_W, N2_W),SPACE WAGON (D0_V/W),SPACE WAGON (N3_W, N4_W),TREDIA (A21_)
49257	**Lenker, Radaufhängung, Track Control Arm, Bras de liaison, suspension de roue**
	TOYOTA AVENSIS Liftback (_T22_),AVENSIS Station Wagon (_T22_),AVENSIS (_T22_)
49257/1	**Lenker, Radaufhängung, Track Control Arm, Bras de liaison, suspension de roue**
	TOYOTA AVENSIS Liftback (_T22_),AVENSIS Station Wagon (_T22_),AVENSIS (_T22_)
49258	**Lenker, Radaufhängung, Track Control Arm, Bras de liaison, suspension de roue**
	TOYOTA AVENSIS Liftback (_T22_),AVENSIS Station Wagon (_T22_),AVENSIS (_T22_)
49258/1	**Lenker, Radaufhängung, Track Control Arm, Bras de liaison, suspension de roue**
	TOYOTA AVENSIS Liftback (_T22_),AVENSIS Station Wagon (_T22_),AVENSIS (_T22_)
49259	**Stange/Strebe, Stabilisator, Link Stabiliser, Entretoise/tige, stabilisateur**
	TOYOTA AVENSIS Liftback (_T22_),AVENSIS Station Wagon (_T22_),AVENSIS (_T22_)
49260	**Lenker, Radaufhängung, Track Control Arm, Bras de liaison, suspension de roue**
	HONDA CR-V I (RD)
49261	**Lenker, Radaufhängung, Track Control Arm, Bras de liaison, suspension de roue**
	HONDA CR-V I (RD)
49262	**Stange/Strebe, Radaufhängung, Link, wheel suspension, Biellette de barre stabilisatrice**
	HONDA CIVIC IV (EG, EH)
49263	**Stange/Strebe, Radaufhängung, Link, wheel suspension, Biellette de barre stabilisatrice**
	HONDA CIVIC IV (EG, EH)
49264	**Spurstangenkopf, Tie Rod End, Rotule de barre de connexion**
	HONDA ACCORD VII Aerodeck (CM_),ACCORD VII (CG, CK),ACCORD VII Coupe (CG),ACCORD VII Hatchback (CH)
49265	**Spurstangenkopf, Tie Rod End, Rotule de barre de connexion**
	HONDA ACCORD VII Aerodeck (CM_),ACCORD VII (CG, CK),ACCORD VII Coupe (CG),ACCORD VII Hatchback (CH)
49267	**Stange/Strebe, Radaufhängung, Link, wheel suspension, Biellette de barre stabilisatrice**
	HONDA ACCORD IV Aerodeck (CB8, CB9),ACCORD IV (CB3, CB7),ACCORD IV Coupe (CC1),ACCORD V Aerodeck (CE),ACCORD V (CC7, CD),ACCORD V Coupe (CD7, CD9),ACCORD VI (CE, CF)
49268HPS	**Stange/Strebe, Stabilisator, Link Stabiliser, Entretoise/tige, stabilisateur**
	HONDA CR-V I (RD)
49269HPS	**Stange/Strebe, Stabilisator, Link Stabiliser, Entretoise/tige, stabilisateur**
	HONDA CR-V I (RD)
49270HPS	**Stange/Strebe, Stabilisator, Link Stabiliser, Entretoise/tige, stabilisateur**
	TOYOTA AVENSIS Liftback (_T22_),AVENSIS Station Wagon (_T22_),AVENSIS (_T22_)
49271HPS	**Stange/Strebe, Stabilisator, Link Stabiliser, Entretoise/tige, stabilisateur**
	TOYOTA AVENSIS Liftback (_T22_),AVENSIS Station Wagon (_T22_),AVENSIS (_T22_)
49272	**Lenker, Radaufhängung, Track Control Arm, Bras de liaison, suspension de roue**
	TOYOTA RAV 4 I Cabrio (SXA1_),RAV 4 I (SXA1_)
49273	**Lenker, Radaufhängung, Track Control Arm, Bras de liaison, suspension de roue**
	TOYOTA RAV 4 I Cabrio (SXA1_),RAV 4 I (SXA1_)
49274HPS	**Stange/Strebe, Stabilisator, Link Stabiliser, Entretoise/tige, stabilisateur**
	TOYOTA RAV 4 I Cabrio (SXA1_),RAV 4 I (SXA1_)
49276	**Lenker, Radaufhängung, Track Control Arm, Bras de liaison, suspension de roue**
	TOYOTA COROLLA (_E9_),COROLLA Station Wagon (_E9_)
49277	**Lenker, Radaufhängung, Track Control Arm, Bras de liaison, suspension de roue**
	TOYOTA COROLLA (_E9_),COROLLA Station Wagon (_E9_)
49280	**Stange/Strebe, Stabilisator, Link Stabiliser, Entretoise/tige, stabilisateur**
	LEXUS ES (F1, F2),TOYOTA CAMRY (_V20)
49280HPS	**Stange/Strebe, Stabilisator, Link Stabiliser, Entretoise/tige, stabilisateur**
	LEXUS ES (F1, F2),TOYOTA CAMRY (_V20)
49281	**Stange/Strebe, Stabilisator, Link Stabiliser, Entretoise/tige, stabilisateur**
	LEXUS ES (F1, F2),TOYOTA CAMRY (_V20)
49281HPS	**Stange/Strebe, Stabilisator, Link Stabiliser, Entretoise/tige, stabilisateur**
	LEXUS ES (F1, F2),TOYOTA CAMRY (_V20)
49282	**Stange/Strebe, Stabilisator, Link Stabiliser, Entretoise/tige, stabilisateur**
	LEXUS GS (JZS147),GS (JZS160),TOYOTA CAMRY (_V20)
49282HPS	**Stange/Strebe, Stabilisator, Link Stabiliser, Entretoise/tige, stabilisateur**
	LEXUS GS (JZS147),GS (JZS160),TOYOTA CAMRY (_V20)

49283	**Stange/Strebe, Stabilisator, Link Stabiliser, Entretoise/tige, stabilisateur**
	TOYOTA PREVIA (TCR1_, 2_)
49283HPS	**Stange/Strebe, Stabilisator, Link Stabiliser, Entretoise/tige, stabilisateur**
	TOYOTA PREVIA (TCR1_, 2_)
49284	**Stange/Strebe, Stabilisator, Link Stabiliser, Entretoise/tige, stabilisateur**
	TOYOTA PREVIA (TCR1_, 2_)
49284HPS	**Stange/Strebe, Stabilisator, Link Stabiliser, Entretoise/tige, stabilisateur**
	TOYOTA PREVIA (TCR1_, 2_)
49285	**Stange/Strebe, Stabilisator, Link Stabiliser, Entretoise/tige, stabilisateur**
	LEXUS GS (JZS147),GS (JZS160),IS (GXE10),TOYOTA CAMRY Station Wagon (_V10),CAMRY (_V1_)
49287	**Axialgelenk, Spurstange, Inner Tie Rod, Rotule de direction intérieure, barre de connexion**
	TOYOTA AVENSIS Liftback (_T22_),AVENSIS Station Wagon (_T22_),AVENSIS (_T22_)
49288	**Axialgelenk, Spurstange, Inner Tie Rod, Rotule de direction intérieure, barre de connexion**
	TOYOTA CARINA E Sportswagon (_T19_),CARINA E Stufenheck (_T19_),CARINA E (_T19_)
49289	**Axialgelenk, Spurstange, Inner Tie Rod, Rotule de direction intérieure, barre de connexion**
	TOYOTA CARINA E Sportswagon (_T19_),CARINA E Stufenheck (_T19_),CARINA E (_T19_)
49290	**Lenker, Radaufhängung, Track Control Arm, Bras de liaison, suspension de roue**
	DAEWOO NUBIRA (KLAJ),NUBIRA Stufenheck (KLAJ),NUBIRA Wagon (KLAJ)
49291	**Lenker, Radaufhängung, Track Control Arm, Bras de liaison, suspension de roue**
	DAEWOO NUBIRA (KLAJ),NUBIRA Stufenheck (KLAJ),NUBIRA Wagon (KLAJ)
49292	**Lenker, Radaufhängung, Track Control Arm, Bras de liaison, suspension de roue**
	SUZUKI SWIFT II (AH, AJ),SWIFT II Schrägheck (EA, MA)
49293	**Lenker, Radaufhängung, Track Control Arm, Bras de liaison, suspension de roue**
	SUZUKI SWIFT II (AH, AJ),SWIFT II Schrägheck (EA, MA)
49295	**Stange/Strebe, Stabilisator, Link Stabiliser, Entretoise/tige, stabilisateur**
	CHEVROLET EPICA (KL1_),EVANDA,DAEWOO EVANDA (KLAL),LEGANZA (KLAV),REZZO (KLAU)
49296	**Stange/Strebe, Stabilisator, Link Stabiliser, Entretoise/tige, stabilisateur**
	CHEVROLET EPICA (KL1_),EVANDA,DAEWOO EVANDA (KLAL),LEGANZA (KLAV),REZZO (KLAU)
49297	**Stange/Strebe, Stabilisator, Link Stabiliser, Entretoise/tige, stabilisateur**
	DAEWOO LEGANZA (KLAV)
49298	**Stange/Strebe, Stabilisator, Link Stabiliser, Entretoise/tige, stabilisateur**
	DAEWOO NUBIRA (KLAJ),NUBIRA Stufenheck (KLAJ),NUBIRA Wagon (KLAJ)
49298HPS	**Stange/Strebe, Stabilisator, Link Stabiliser, Entretoise/tige, stabilisateur**
	DAEWOO NUBIRA (KLAJ),NUBIRA Stufenheck (KLAJ),NUBIRA Wagon (KLAJ),NUBIRA Wagon (KLAN)
49301	**Lenker, Radaufhängung, Track Control Arm, Bras de liaison, suspension de roue**
	PEUGEOT 206 CC (2D),206 Schrägheck (2A/C, T3E),206 SW (2E/K)
49302	**Lenker, Radaufhängung, Track Control Arm, Bras de liaison, suspension de roue**
	PEUGEOT 206 CC (2D),206 Schrägheck (2A/C, T3E),206 SW (2E/K)
49303	**Stange/Strebe, Stabilisator, Link Stabiliser, Entretoise/tige, stabilisateur**
	CITROËN C5 Break (TD_),C5 (RD_),C6 (TD_),PEUGEOT 407 Coupe (6C_),407 SW (6E_),407 (6D_)
49304HPS	**Stange/Strebe, Stabilisator, Link Stabiliser, Entretoise/tige, stabilisateur**
	CITROËN C3 Picasso,PEUGEOT 207 CC (WD_),207 (WA_, WC_)
49305HPS	**Stange/Strebe, Stabilisator, Link Stabiliser, Entretoise/tige, stabilisateur**
	CITROËN C3 Picasso,PEUGEOT 207 CC (WD_),207 (WA_, WC_)
49306	**Spurstangenkopf, Tie Rod End, Rotule de barre de connexion**
	CITROËN C1 (PM_, PN_),PEUGEOT 107,TOYOTA AYGO (B10)
49307	**Spurstangenkopf, Tie Rod End, Rotule de barre de connexion**
	CITROËN C1 (PM_, PN_),PEUGEOT 107,TOYOTA AYGO (B10)
49308	**Stange/Strebe, Stabilisator, Link Stabiliser, Entretoise/tige, stabilisateur**
	CITROËN C1 (PM_, PN_),PEUGEOT 107,TOYOTA AYGO (B10)
49309	**Trag-/Führungsgelenk, Ball Joint, Rotule de suspension**
	CITROËN C5 Break (TD_),C5 (RD_),C6 (TD_),PEUGEOT 407 Coupe (6C_),407 SW (6E_),407 (6D_)
49310	**Lenker, Radaufhängung, Track Control Arm, Bras de liaison, suspension de roue**
	CITROËN C3 Picasso,PEUGEOT 207 CC (WD_),207 SW (WK_),207 (WA_, WC_)
49311	**Lenker, Radaufhängung, Track Control Arm, Bras de liaison, suspension de roue**
	CITROËN C3 Picasso,PEUGEOT 207 CC (WD_),207 SW (WK_),207 (WA_, WC_)
49312	**Spurstangenkopf, Tie Rod End, Rotule de barre de connexion**
	CITROËN C3 Picasso,PEUGEOT 207 CC (WD_),207 SW (WK_),207 (WA_, WC_)

49313 **Spurstangenkopf, Tie Rod End, Rotule de barre de connexion**

CITROËN C3 Picasso,PEUGEOT 207 CC (WD_),207 SW (WK_),207 (WA_, WC_)

49314 **Axialgelenk, Spurstange, Inner Tie Rod, Rotule de direction intérieure, barre de connexion**

CITROËN C3 Picasso,PEUGEOT 207 CC (WD_),207 SW (WK_),207 (WA_, WC_)

49315 **Axialgelenk, Spurstange, Inner Tie Rod, Rotule de direction intérieure, barre de connexion**

PEUGEOT 3008,308 CC,308 SW,308 (4A_, 4C_),5008

49316 **Lenker, Radaufhängung, Track Control Arm, Bras de liaison, suspension de roue**

PEUGEOT 3008,308 SW,308 (4A_, 4C_),5008

49317 **Lenker, Radaufhängung, Track Control Arm, Bras de liaison, suspension de roue**

PEUGEOT 3008,308 SW,308 (4A_, 4C_),5008

49318 **Lenker, Radaufhängung, Track Control Arm, Bras de liaison, suspension de roue**

CITROËN C1 (PM_, PN_),PEUGEOT 107,TOYOTA AYGO (B10)

49319 **Lenker, Radaufhängung, Track Control Arm, Bras de liaison, suspension de roue**

CITROËN C1 (PM_, PN_),PEUGEOT 107,TOYOTA AYGO (B10)

49320 **Lenker, Radaufhängung, Track Control Arm, Bras de liaison, suspension de roue**

CITROËN C5 Break (TD_),C5 (RD_),C6 (TD_),PEUGEOT 407 Coupe (6C_),407 SW (6E_),407 (6D_)

49321 **Lenker, Radaufhängung, Track Control Arm, Bras de liaison, suspension de roue**

CITROËN C5 Break (TD_),C5 (RD_),C6 (TD_),PEUGEOT 407 Coupe (6C_),407 SW (6E_),407 (6D_)

49400 **Axialgelenk, Spurstange, Inner Tie Rod, Rotule de direction intérieure, barre de connexion**

CITROËN C5 Break (DE_),C5 Break (RE_),C5 (DC_),C5 (RC_)

49401 **Axialgelenk, Spurstange, Inner Tie Rod, Rotule de direction intérieure, barre de connexion**

CITROËN BERLINGO,BERLINGO Kasten,PEUGEOT EXPERT Tepee (VF3V_),PARTNER Kasten,PARTNER Tepee,RCZ

49500 **Lenker, Radaufhängung, Track Control Arm, Bras de liaison, suspension de roue**

HONDA CIVIC V Aerodeck,CIVIC V (EJ9, EK3/4),CIVIC V Fastback (MB),CIVIC V Hatchback (EJ9, EK1/3/4)

49501 **Lenker, Radaufhängung, Track Control Arm, Bras de liaison, suspension de roue**

HONDA CIVIC V Aerodeck,CIVIC V (EJ9, EK3/4),CIVIC V Fastback (MB),CIVIC V Hatchback (EJ9, EK1/3/4)

49502 **Lenker, Radaufhängung, Track Control Arm, Bras de liaison, suspension de roue**

HONDA CIVIC IV Coupe (EJ),CIVIC IV (EG, EH),CIVIC IV Fastback (MA, MB),CIVIC IV Hatchback (EG),CRX III (EH, EG),INTEGRA Coupe (DC2, DC4),MG MG ZS,MG ZS Hatchback,ROVER 400 Hatchback (RT),400 (RT),45 (RT),45 Stufenheck (RT)

49503 **Lenker, Radaufhängung, Track Control Arm, Bras de liaison, suspension de roue**

HONDA CIVIC IV Coupe (EJ),CIVIC IV (EG, EH),CIVIC IV Fastback (MA, MB),CIVIC IV Hatchback (EG),CRX III (EH, EG),INTEGRA Coupe (DC2, DC4),MG MG ZS,MG ZS Hatchback,ROVER 400 Hatchback (RT),400 (RT),45 (RT),45 Stufenheck (RT)

49504 **Stange/Strebe, Radaufhängung, Link, wheel suspension, Biellette de barre stabilisatrice**

HONDA CIVIC IV Coupe (EJ),CIVIC IV (EG, EH),CIVIC IV Fastback (MA, MB),CIVIC IV Hatchback (EG),CIVIC V Aerodeck,CIVIC V (EJ9, EK3/4),CIVIC V Fastback (MB),CIVIC V Hatchback (EJ9, EK1/3/4),CIVIC VI (EU),CR-V I (RD),CR-V II (RD_),INTEGRA Coupe (DC2, DC4)

49505 **Stange/Strebe, Radaufhängung, Link, wheel suspension, Biellette de barre stabilisatrice**

HONDA CIVIC IV Coupe (EJ),CIVIC IV (EG, EH),CIVIC IV Fastback (MA, MB),CIVIC IV Hatchback (EG),CIVIC V Aerodeck,CIVIC V (EJ9, EK3/4),CIVIC V Fastback (MB),CIVIC V Hatchback (EJ9, EK1/3/4),CIVIC VI (EU),CIVIC VI Hatchback (EU, EP, ES),CR-V II (RD_),INTEGRA Coupe (DC2, DC4)

49506 **Lenker, Radaufhängung, Track Control Arm, Bras de liaison, suspension de roue**

HONDA ACCORD IV Aerodeck (CB8, CB9),ACCORD IV (CB3, CB7),ACCORD IV Coupe (CC1),ROVER 600 (RH)

49507 **Lenker, Radaufhängung, Track Control Arm, Bras de liaison, suspension de roue**

HONDA ACCORD IV Aerodeck (CB8, CB9),ACCORD IV (CB3, CB7),ACCORD IV Coupe (CC1),ROVER 600 (RH)

49508 **Lenker, Radaufhängung, Track Control Arm, Bras de liaison, suspension de roue**

HONDA ACCORD IV Aerodeck (CB8, CB9),ACCORD IV (CB3, CB7),ACCORD IV Coupe (CC1),ACCORD V (CC7, CD),ACCORD V Coupe (CD7, CD9),ROVER 600 (RH)

49509 **Lenker, Radaufhängung, Track Control Arm, Bras de liaison, suspension de roue**

HONDA ACCORD IV Aerodeck (CB8, CB9),ACCORD IV (CB3, CB7),ACCORD IV Coupe (CC1),ROVER 600 (RH)

49510 **Trag-/Führungsgelenk, Ball Joint, Rotule de suspension**

HONDA CIVIC IV Coupe (EJ),CIVIC IV (EG, EH),CIVIC IV Fastback (MA, MB),CIVIC IV Hatchback (EG),ROVER 400 Hatchback (RT),400 (RT),45 (RT),45 Stufenheck (RT)

49511 **Lenker, Radaufhängung, Track Control Arm, Bras de liaison, suspension de roue**

HONDA CIVIC II Shuttle (EE),CIVIC III Hatchback (EC, ED, EE),CIVIC III Stufenheck (ED),CRX II (ED, EE),CRX III (EH, EG)

49512 **Lenker, Radaufhängung, Track Control Arm, Bras de liaison, suspension de roue**

HONDA CIVIC II Shuttle (EE),CIVIC III Hatchback (EC, ED, EE),CIVIC III Stufenheck (ED),CRX II (ED, EE),CRX III (EH, EG)

49513 **Lenker, Radaufhängung, Track Control Arm, Bras de liaison, suspension de roue**

HONDA CIVIC V Aerodeck,CIVIC V Coupe (EJ6, EJ8),CIVIC V (EJ9, EK3/4),CIVIC V Fastback (MB),CIVIC V Hatchback (EJ9, EK1/3/4)

49514 **Lenker, Radaufhängung, Track Control Arm, Bras de liaison, suspension de roue**

HONDA CIVIC V Aerodeck,CIVIC V Coupe (EJ6, EJ8),CIVIC V (EJ9, EK3/4),CIVIC V Fastback (MB),CIVIC V Hatchback (EJ9, EK1/3/4)

49517 **Stange/Strebe, Stabilisator, Link Stabiliser, Entretoise/tige, stabilisateur**

HONDA CIVIC III Hatchback (EC, ED, EE),CIVIC III Stufenheck (ED),CIVIC IV Coupe (EJ),CIVIC IV (EG, EH),CIVIC IV Fastback (MA, MB),CIVIC IV Hatchback (EG),CRX II (ED, EE),CRX III (EH, EG),PRELUDE III (BA)

49518 **Spurstangenkopf, Tie Rod End, Rotule de barre de connexion**

KIA SEPHIA (FA),SEPHIA Stufenheck (FA)

49519	**Stange/Strebe, Stabilisator, Link Stabiliser, Entretoise/tige, stabilisateur**
	SUZUKI SWIFT Cabriolet (SF413),SWIFT II (AH, AJ),SWIFT II Schrägheck (EA, MA)
49520	**Lenker, Radaufhängung, Track Control Arm, Bras de liaison, suspension de roue**
	NISSAN MICRA (K11)
49521	**Lenker, Radaufhängung, Track Control Arm, Bras de liaison, suspension de roue**
	NISSAN MICRA (K11)
49522	**Lenker, Radaufhängung, Track Control Arm, Bras de liaison, suspension de roue**
	NISSAN PRIMERA Hatchback (P10),PRIMERA (P10),PRIMERA Traveller (WP11),PRIMERA Traveller (W10)
49523	**Lenker, Radaufhängung, Track Control Arm, Bras de liaison, suspension de roue**
	NISSAN PRIMERA Hatchback (P10),PRIMERA (P10),PRIMERA Traveller (WP11),PRIMERA Traveller (W10)
49524	**Stange/Strebe, Stabilisator, Link Stabiliser, Entretoise/tige, stabilisateur**
	NISSAN PRIMERA Hatchback (P10),PRIMERA (P10)
49525HPS	**Stange/Strebe, Stabilisator, Link Stabiliser, Entretoise/tige, stabilisateur**
	NISSAN ALMERA I Hatchback (N15),ALMERA I (N15),BLUEBIRD Hatchback (T72, T12),BLUEBIRD Station Wagon (WU11),BLUEBIRD (T72 , T12),BLUEBIRD (U11),MAXIMA (J30),PRIMERA Hatchback (P10),PRIMERA (P10),PRIMERA Traveller (W10),SUNNY II Coupe (B12),SUNNY II Hatchback (N13),SUNNY II (N13),SUNNY II Traveller (B12),SUNNY III Hatchback (N14),SUNNY III Liftback (N14),SUNNY III (N14),SUNNY III Traveller (Y10),SUNNY Kasten (Y10),100 NX (B13)
49526	**Lenker, Radaufhängung, Track Control Arm, Bras de liaison, suspension de roue**
	NISSAN PRIMERA Hatchback (P10),PRIMERA Hatchback (P11),PRIMERA (P10),PRIMERA (P11),PRIMERA Traveller (WP11)
49527	**Lenker, Radaufhängung, Track Control Arm, Bras de liaison, suspension de roue**
	NISSAN PRIMERA Hatchback (P10),PRIMERA Hatchback (P11),PRIMERA (P10),PRIMERA (P11),PRIMERA Traveller (WP11)
49528	**Lenker, Radaufhängung, Track Control Arm, Bras de liaison, suspension de roue**
	NISSAN ALMERA I Hatchback (N15),ALMERA I (N15)
49529	**Lenker, Radaufhängung, Track Control Arm, Bras de liaison, suspension de roue**
	NISSAN ALMERA I Hatchback (N15),ALMERA I (N15)
49530	**Lenker, Radaufhängung, Track Control Arm, Bras de liaison, suspension de roue**
	NISSAN SUNNY III Hatchback (N14),SUNNY III Liftback (N14),SUNNY III (N14),SUNNY III Traveller (Y10),SUNNY Kasten (Y10),100 NX (B13)
49531	**Lenker, Radaufhängung, Track Control Arm, Bras de liaison, suspension de roue**
	NISSAN SUNNY III Hatchback (N14),SUNNY III Liftback (N14),SUNNY III (N14),SUNNY III Traveller (Y10),SUNNY Kasten (Y10),100 NX (B13)
49532	**Spurstange, Rod Assembly, Barre de connexion**
	NISSAN PRIMERA Traveller (W10),SUNNY III Hatchback (N14),SUNNY III Liftback (N14),SUNNY III (N14),SUNNY III Traveller (Y10),SUNNY Kasten (Y10),100 NX (B13)
49534	**Lenker, Radaufhängung, Track Control Arm, Bras de liaison, suspension de roue**
	NISSAN PRIMERA Hatchback (P11),PRIMERA (P10),PRIMERA (P11),PRIMERA Traveller (WP11)
49535	**Lenker, Radaufhängung, Track Control Arm, Bras de liaison, suspension de roue**
	NISSAN PRIMERA Hatchback (P11),PRIMERA (P10),PRIMERA (P11),PRIMERA Traveller (WP11)
49536	**Lenker, Radaufhängung, Track Control Arm, Bras de liaison, suspension de roue**
	NISSAN MICRA (K11)
49537	**Lenker, Radaufhängung, Track Control Arm, Bras de liaison, suspension de roue**
	NISSAN MICRA (K11)
49538	**Lenker, Radaufhängung, Track Control Arm, Bras de liaison, suspension de roue**
	NISSAN MICRA (K10)
49539	**Lenker, Radaufhängung, Track Control Arm, Bras de liaison, suspension de roue**
	NISSAN MICRA (K10)
49540	**Lenker, Radaufhängung, Track Control Arm, Bras de liaison, suspension de roue**
	MITSUBISHI COLT IV (CA_A),LANCER IV (C6_A, C7_A),LANCER V (CB/D_A),LANCER V Station Wagon (CB_W, CD_W),PROTON PERSONA 300 (C9_M),PERSONA 400 (C9_S),PERSONA 400 Hatchback (C9_C, C9_S)
49541	**Lenker, Radaufhängung, Track Control Arm, Bras de liaison, suspension de roue**
	MITSUBISHI COLT IV (CA_A),LANCER IV (C6_A, C7_A),LANCER V (CB/D_A),LANCER V Station Wagon (CB_W, CD_W),PROTON PERSONA 300 (C9_M),PERSONA 400 (C9_S),PERSONA 400 Hatchback (C9_C, C9_S)
49542	**Lenker, Radaufhängung, Track Control Arm, Bras de liaison, suspension de roue**
	MITSUBISHI COLT V (CJ_A),LANCER VI (CK/P_A)
49543	**Lenker, Radaufhängung, Track Control Arm, Bras de liaison, suspension de roue**
	MITSUBISHI COLT V (CJ_A),LANCER VI (CK/P_A)
49544	**Lenker, Radaufhängung, Track Control Arm, Bras de liaison, suspension de roue**
	MITSUBISHI CARISMA (DA_),CARISMA Stufenheck (DA_),VOLVO S40 I (VS),V40 Kombi (VW)
49545	**Lenker, Radaufhängung, Track Control Arm, Bras de liaison, suspension de roue**
	MITSUBISHI CARISMA (DA_),CARISMA Stufenheck (DA_),VOLVO S40 I (VS),V40 Kombi (VW)
49546	**Lenker, Radaufhängung, Track Control Arm, Bras de liaison, suspension de roue**
	MITSUBISHI PAJERO II Canvas Top (V2_W, V4_W),PAJERO II (V2_W, V4_W)
49547	**Lenker, Radaufhängung, Track Control Arm, Bras de liaison, suspension de roue**
	MITSUBISHI PAJERO II Canvas Top (V2_W, V4_W),PAJERO II (V2_W, V4_W)

49548 **Lenker, Radaufhängung, Track Control Arm, Bras de liaison, suspension de roue**

SUZUKI SWIFT II (AH, AJ),SWIFT II Schrägheck (EA, MA)

49549 **Lenker, Radaufhängung, Track Control Arm, Bras de liaison, suspension de roue**

SUZUKI SWIFT II (AH, AJ),SWIFT II Schrägheck (EA, MA)

49550 **Lenker, Radaufhängung, Track Control Arm, Bras de liaison, suspension de roue**

TOYOTA COROLLA Compact (_E10_),COROLLA Compact (_E11_),COROLLA (_E10_),COROLLA (_E11_),COROLLA Liftback (_E10_),COROLLA Liftback (_E11_),COROLLA Wagon (_E10_),COROLLA Wagon (__E11_)

49551 **Lenker, Radaufhängung, Track Control Arm, Bras de liaison, suspension de roue**

TOYOTA COROLLA Compact (_E10_),COROLLA Compact (_E11_),COROLLA (_E10_),COROLLA (_E11_),COROLLA Liftback (_E10_),COROLLA Liftback (_E11_),COROLLA Wagon (_E10_),COROLLA Wagon (__E11_)

49552 **Trag-/Führungsgelenk, Ball Joint, Rotule de suspension**

TOYOTA CELICA (ZZT23_),COROLLA Combi (_E12J_, _E12T_),COROLLA Compact (_E10_),COROLLA Compact (_E11_),COROLLA (_E10_),COROLLA (_E11_),COROLLA (_E12U_, _E12J_),COROLLA Liftback (_E10_),COROLLA Liftback (_E11_),COROLLA Stufenheck (_E12J_, _E12T_),COROLLA Verso (_E12J_),COROLLA Wagon (_E10_),COROLLA Wagon (__E11_),PRIUS Stufenheck (NHW11_),RAV 4 II (XA2)

49554 **Spurstangenkopf, Tie Rod End, Rotule de barre de connexion**

SUBARU JUSTY I (KAD),JUSTY II (JMA, MS)

49555 **Axialgelenk, Spurstange, Inner Tie Rod, Rotule de direction intérieure, barre de connexion**

SUBARU JUSTY I (KAD),JUSTY II (JMA, MS)

49556 **Trag-/Führungsgelenk, Ball Joint, Rotule de suspension**

SUBARU JUSTY I (KAD)

49557 **Spurstangenkopf, Tie Rod End, Rotule de barre de connexion**

SUBARU IMPREZA Coupe (GFC),IMPREZA Station Wagon (GD, GG),IMPREZA Station Wagon (GF),IMPREZA Stufenheck (GC),IMPREZA Stufenheck (GD, GG),LEGACY I (BC),LEGACY I Station Wagon (BC, BJF),LEGACY II (BD, BG),LEGACY II Station Wagon (BD, BG)

49558 **Spurstangenkopf, Tie Rod End, Rotule de barre de connexion**

SUBARU IMPREZA Coupe (GFC),IMPREZA Station Wagon (GD, GG),IMPREZA Station Wagon (GF),IMPREZA Stufenheck (GC),IMPREZA Stufenheck (GD, GG),LEGACY I (BC),LEGACY I Station Wagon (BC, BJF),LEGACY II (BD, BG),LEGACY II Station Wagon (BD, BG)

49559 **Axialgelenk, Spurstange, Inner Tie Rod, Rotule de direction intérieure, barre de connexion**

SUBARU IMPREZA Coupe (GFC),IMPREZA Station Wagon (GD, GG),IMPREZA Station Wagon (GF),IMPREZA Stufenheck (GC),IMPREZA Stufenheck (GD, GG),LEGACY I (BC),LEGACY I Station Wagon (BC, BJF),LEGACY II (BD, BG),LEGACY II Station Wagon (BD, BG),LEGACY III (BE, BH),LEGACY III Station Wagon (BE, BH),OUTBACK (BE, BH)

49560 **Trag-/Führungsgelenk, Ball Joint, Rotule de suspension**

SUBARU IMPREZA Coupe (GFC),IMPREZA Station Wagon (GD, GG),IMPREZA Station Wagon (GF),IMPREZA Stufenheck (GC),IMPREZA Stufenheck (GD, GG),LEGACY I (BC),LEGACY I Station Wagon (BC, BJF),LEGACY II (BD, BG),LEGACY II Station Wagon (BD, BG),LEGACY III (BE, BH),LEGACY III Station Wagon (BE, BH)

49561 **Spurstangenkopf, Tie Rod End, Rotule de barre de connexion**

SUZUKI VITARA Cabrio (ET, TA),VITARA (ET, TA)

49562 **Spurstangenkopf, Tie Rod End, Rotule de barre de connexion**

SUZUKI SAMURAI (SJ),SJ 410,SJ 410 Cabrio,SJ 413,VITARA Cabrio (ET, TA),VITARA (ET, TA)

49563 **Spurstangenkopf, Tie Rod End, Rotule de barre de connexion**

SUZUKI CARRY Kasten (ST90V),SUPER CARRY Bus (ED)

49564 **Spurstangenkopf, Tie Rod End, Rotule de barre de connexion**

SUZUKI CARRY Kasten (ST90V),SAMURAI (SJ),SUPER CARRY Bus (ED)

49565 **Lenker, Radaufhängung, Track Control Arm, Bras de liaison, suspension de roue**

SUZUKI CARRY Kasten (ST90V),SUPER CARRY Bus (ED)

49566 **Spurstangenkopf, Tie Rod End, Rotule de barre de connexion**

TOYOTA AVENSIS Liftback (_T22_),AVENSIS Station Wagon (_T22_),AVENSIS (_T22_)

49567 **Spurstangenkopf, Tie Rod End, Rotule de barre de connexion**

TOYOTA AVENSIS Liftback (_T22_),AVENSIS Station Wagon (_T22_),AVENSIS (_T22_)

49568 **Lenker, Radaufhängung, Track Control Arm, Bras de liaison, suspension de roue**

TOYOTA YARIS (_CP10),YARIS VERSO (NC/LP2_)

49569 **Lenker, Radaufhängung, Track Control Arm, Bras de liaison, suspension de roue**

TOYOTA YARIS (_CP10),YARIS VERSO (NC/LP2_)

49570 **Lenker, Radaufhängung, Track Control Arm, Bras de liaison, suspension de roue**

TOYOTA COROLLA Compact (_E10_),COROLLA (_E10_),COROLLA Liftback (_E10_),COROLLA Wagon (_E10_)

49571 **Lenker, Radaufhängung, Track Control Arm, Bras de liaison, suspension de roue**

TOYOTA COROLLA Compact (_E10_),COROLLA (_E10_),COROLLA Liftback (_E10_),COROLLA Wagon (_E10_)

49572 **Lenker, Radaufhängung, Track Control Arm, Bras de liaison, suspension de roue**

TOYOTA COROLLA (_E10_),COROLLA Wagon (_E10_)

49573 **Lenker, Radaufhängung, Track Control Arm, Bras de liaison, suspension de roue**

TOYOTA COROLLA (_E10_),COROLLA Wagon (_E10_)

49574 **Lenker, Radaufhängung, Track Control Arm, Bras de liaison, suspension de roue**

TOYOTA CARINA E Sportswagon (_T19_),CARINA E Stufenheck (_T19_),CARINA E (_T19_)

49575 **Lenker, Radaufhängung, Track Control Arm, Bras de liaison, suspension de roue**

TOYOTA CARINA E Sportswagon (_T19_),CARINA E Stufenheck (_T19_),CARINA E (_T19_)

49576 **Lenker, Radaufhängung, Track Control Arm, Bras de liaison, suspension de roue**

TOYOTA AVENSIS Liftback (_T22_),AVENSIS Station Wagon (_T22_),AVENSIS (_T22_)

49577 **Lenker, Radaufhängung, Track Control Arm, Bras de liaison, suspension de roue**

TOYOTA AVENSIS Liftback (_T22_),AVENSIS Station Wagon (_T22_),AVENSIS (_T22_)

49578 **Trag-/Führungsgelenk, Ball Joint, Rotule de suspension**

MITSUBISHI CARISMA (DA_),CARISMA Stufenheck (DA_),COLT II (C1_A),COLT III (C5_A),COLT IV (CA_A),CORDIA (A21_A, AB),ECLIPSE I (D2_A),ECLIPSE II (D3_),GALANT II (A16_),GALANT II Station Wagon (A16_V),GALANT III (E1_A),GALANT IV (E3_A),GALANT IV Stufenheck (E3_A),GALANT V (E5_A, E7_A, E8_A),GALANT V Stufenheck (E5_A, E7_A, E8_A),GALANT VI (EA_),GALANT VI Station Wagon (EA_),LANCER III (C1_A, C6_A),LANCER III Station Wagon (C1_V, C3_V),LANCER IV (C6_A, C7_A),LANCER IV Stufenheck (C6_A),LANCER V (CB/D_A),LANCER V Station Wagon (CB_W, CD_W),SAPPORO III (E16A),SIGMA (F16A),SIGMA Station Wagon (F07W),SPACE RUNNER (N1_W, N2_W),SPACE STAR (DG0),SPACE WAGON (D0_V/W),SPACE WAGON (N3_W, N4_W),TREDIA (A21_),VOLVO S40 I (VS),V40 Kombi (VW)

49579HPS **Stange/Strebe, Stabilisator, Link Stabiliser, Entretoise/tige, stabilisateur**

TOYOTA CARINA E Sportswagon (_T19_),CARINA E Stufenheck (_T19_),CARINA E (_T19_),CARINA II Station Wagon (_T17_),CARINA II Stufenheck (_T17_),CARINA II (_T17_),CELICA Cabriolet (_T20_),CELICA (_T20_),COROLLA Compact (_E9_),COROLLA (_E9_),COROLLA Liftback (_E9_),COROLLA Station Wagon (_E9_),RAV 4 I (SXA1_)

49580 **Lenker, Radaufhängung, Track Control Arm, Bras de liaison, suspension de roue**

MAZDA 323 C IV (BG),323 C V (BA),323 F V (BA),323 P V (BA),323 S IV (BG),323 S V (BA)

49581 **Lenker, Radaufhängung, Track Control Arm, Bras de liaison, suspension de roue**

MAZDA 323 C IV (BG),323 F V (BA),323 S IV (BG),323 S V (BA)

49582 **Lenker, Radaufhängung, Track Control Arm, Bras de liaison, suspension de roue**

FORD USA PROBE II (ECP),MAZDA MX-6 (GE),626 III Station Wagon (GV),626 IV (GE),626 IV Hatchback (GE)

49583 **Lenker, Radaufhängung, Track Control Arm, Bras de liaison, suspension de roue**

FORD USA PROBE II (ECP),MAZDA MX-6 (GE),626 III Station Wagon (GV),626 IV (GE),626 IV Hatchback (GE)

49584 **Lenker, Radaufhängung, Track Control Arm, Bras de liaison, suspension de roue**

MAZDA 323 F VI (BJ),323 S VI (BJ)

49585 **Lenker, Radaufhängung, Track Control Arm, Bras de liaison, suspension de roue**

MAZDA 323 F VI (BJ),323 S VI (BJ)

49586 **Axialgelenk, Spurstange, Inner Tie Rod, Rotule de direction intérieure, barre de connexion**

MAZDA MX-3 (EC),323 C V (BA),323 F V (BA),323 S V (BA)

49589 **Trag-/Führungsgelenk, Ball Joint, Rotule de suspension**

MAZDA MX-3 (EC),323 C IV (BG),323 C V (BA),323 F IV (BG),323 F V (BA),323 S IV (BG),323 S V (BA)

49590 **Stange/Strebe, Stabilisator, Link Stabiliser, Entretoise/tige, stabilisateur**

MAZDA PREMACY (CP),323 F VI (BJ),323 S VI (BJ)

49590HPS **Stange/Strebe, Stabilisator, Link Stabiliser, Entretoise/tige, stabilisateur**

MAZDA PREMACY (CP),323 F VI (BJ),323 S VI (BJ)

49591HPS **Stange/Strebe, Stabilisator, Link Stabiliser, Entretoise/tige, stabilisateur**

MAZDA PREMACY (CP),323 F VI (BJ),323 S VI (BJ)

49594 **Stange/Strebe, Radaufhängung, Link, wheel suspension, Biellette de barre stabilisatrice**

SUZUKI SWIFT Cabriolet (SF413),SWIFT I (AA),SWIFT II (AH, AJ),SWIFT II Schrägheck (EA, MA)

49595 **Lenker, Radaufhängung, Track Control Arm, Bras de liaison, suspension de roue**

SUZUKI SWIFT I (AA)

49596 **Axialgelenk, Spurstange, Inner Tie Rod, Rotule de direction intérieure, barre de connexion**

SUZUKI SWIFT I (AA),SWIFT II (AH, AJ)

49597 **Lenker, Radaufhängung, Track Control Arm, Bras de liaison, suspension de roue**

DAEWOO NUBIRA (KLAJ),NUBIRA Stufenheck (KLAJ),NUBIRA Wagon (KLAJ)

49598 **Lenker, Radaufhängung, Track Control Arm, Bras de liaison, suspension de roue**

DAEWOO NUBIRA (KLAJ),NUBIRA Stufenheck (KLAJ),NUBIRA Wagon (KLAJ)

49599 **Stange/Strebe, Stabilisator, Link Stabiliser, Entretoise/tige, stabilisateur**

SUZUKI SWIFT Cabriolet (SF413),SWIFT I (AA),SWIFT II (AH, AJ),SWIFT II Schrägheck (EA, MA)

49600 **Spurstangenkopf, Tie Rod End, Rotule de barre de connexion**

OPEL OMEGA B Caravan (21_, 22_, 23_),OMEGA B (25_, 26_, 27_)

49601 **Spurstangenkopf, Tie Rod End, Rotule de barre de connexion**

OPEL OMEGA B Caravan (21_, 22_, 23_),OMEGA B (25_, 26_, 27_)

49602 **Axialgelenk, Spurstange, Inner Tie Rod, Rotule de direction intérieure, barre de connexion**

OPEL AGILA (H00),VAUXHALL AGILA

49603 **Axialgelenk, Spurstange, Inner Tie Rod, Rotule de direction intérieure, barre de connexion**

OPEL FRONTERA B (6B_),MONTEREY B

49604 **Schraube, Spureinstellung, Bolt, wheel alignment, Boulon, alignement des roues**

OPEL ASTRA F Cabriolet (53_B),ASTRA F Caravan (51_, 52_),ASTRA F CC (53_, 54_, 58_, 59_),ASTRA F CLASSIC Caravan,ASTRA F CLASSIC CC,ASTRA F CLASSIC Stufenheck,ASTRA F Van (55_),ASTRA F (56_, 57_),CALIBRA A (85_),VECTRA A CC (88_, 89_),VECTRA A (86_, 87_),SAAB 900 II,900 II Cabriolet,900 II Coupe,9-3 Cabriolet (YS3D),9-3 (YS3D),VAUXHALL ASTRA Mk II Belmont,ASTRA Mk II CC,ASTRA Mk II Convertible,ASTRA Mk II Estate,CALIBRA,CARLTON Mk III,CAVALIER Mk III CC,CAVALIER Mk III (87)

49605 **Stange/Strebe, Radaufhängung, Link, wheel suspension, Biellette de barre stabilisatrice**

OPEL OMEGA B Caravan (21_, 22_, 23_),OMEGA B (25_, 26_, 27_)

49606 **Axialgelenk, Spurstange, Inner Tie Rod, Rotule de direction intérieure, barre de connexion**

SAAB 9000,9000 Schrägheck

49607 **Axialgelenk, Spurstange, Inner Tie Rod, Rotule de direction intérieure, barre de connexion**

OPEL ASTRA G Cabriolet,ASTRA G Caravan (F35_),ASTRA G CC (F48_, F08_),ASTRA G Coupe (F07_),ASTRA G Kasten (F70),ASTRA G Stufenheck (F69_),ASTRA H,ASTRA H Caravan,ASTRA H GTC,ASTRA H TwinTop,ZAFIRA (F75_),VAUXHALL ASTRA Mk IV,ASTRA Mk IV CC,ASTRA Mk IV Coupe,ASTRA Mk IV Estate,ZAFIRA

49608 **Lenker, Radaufhängung, Track Control Arm, Bras de liaison, suspension de roue**

OPEL COMBO Kasten/Kombi,COMBO Tour,CORSA C (F08, F68),CORSA C Kasten (F08, W5L),TIGRA TwinTop,VAUXHALL COMBO,CORSA Mk II,CORSAVAN MK II,TIGRA TwinTop

49609 **Lenker, Radaufhängung, Track Control Arm, Bras de liaison, suspension de roue**

OPEL COMBO Kasten/Kombi,COMBO Tour,CORSA C (F08, F68),CORSA C Kasten (F08, W5L),TIGRA TwinTop,VAUXHALL COMBO,CORSA Mk II,CORSAVAN MK II,TIGRA TwinTop

49610 **Trag-/Führungsgelenk, Ball Joint, Rotule de suspension**

OPEL COMBO Kasten/Kombi,COMBO Tour,CORSA C (F08, F68),CORSA C Kasten (F08, W5L),TIGRA TwinTop,VAUXHALL COMBO,CORSA Mk II,CORSAVAN MK II,TIGRA TwinTop

49611 **Spurstangenkopf, Tie Rod End, Rotule de barre de connexion**

OPEL AGILA (H00)

49612 **Lenker, Radaufhängung, Track Control Arm, Bras de liaison, suspension de roue**

OPEL ASTRA H,ASTRA H Caravan

49613 **Lenker, Radaufhängung, Track Control Arm, Bras de liaison, suspension de roue**

OPEL ASTRA H,ASTRA H Caravan

49614 **Lenker, Radaufhängung, Track Control Arm, Bras de liaison, suspension de roue**

OPEL MERIVA

49615 **Lenker, Radaufhängung, Track Control Arm, Bras de liaison, suspension de roue**

OPEL MERIVA

49616 **Trag-/Führungsgelenk, Ball Joint, Rotule de suspension**

ISUZU CAMPO (KB),TROOPER Soft Top (UBS),TROOPER (UBS),OPEL CAMPO (TF_)

49618 **Spurstangenkopf, Tie Rod End, Rotule de barre de connexion**

OPEL ASTRA H,ASTRA H Caravan,VAUXHALL ASTRA MK V CC

49619 **Spurstangenkopf, Tie Rod End, Rotule de barre de connexion**

OPEL ASTRA H,ASTRA H Caravan,VAUXHALL ASTRA MK V CC

49620 **Spurstangenkopf, Tie Rod End, Rotule de barre de connexion**

FIAT CROMA (194),OPEL SIGNUM,VECTRA C,VECTRA C Caravan,VECTRA C GTS,SAAB 9-3 Cabriolet (YS3F),9-3 Kombi,9-3 (YS3F),9-5 Kombi (YS3E),9-5 (YS3E)

49621 **Spurstangenkopf, Tie Rod End, Rotule de barre de connexion**

FIAT CROMA (194),OPEL SIGNUM,VECTRA C,VECTRA C Caravan,VECTRA C GTS,SAAB 9-3 Cabriolet (YS3F),9-3 Kombi,9-3 (YS3F),9-5 Kombi (YS3E),9-5 (YS3E)

49622 **Axialgelenk, Spurstange, Inner Tie Rod, Rotule de direction intérieure, barre de connexion**

FIAT CROMA (194),OPEL VECTRA C,VECTRA C GTS

49623 **Lenker, Radaufhängung, Track Control Arm, Bras de liaison, suspension de roue**

FIAT CROMA (194),OPEL SIGNUM,VECTRA C,VECTRA C Caravan,VECTRA C GTS,SAAB 9-3 Cabriolet (YS3D),9-3 (YS3F)

49624 **Lenker, Radaufhängung, Track Control Arm, Bras de liaison, suspension de roue**

FIAT CROMA (194),OPEL SIGNUM,VECTRA C,VECTRA C Caravan,VECTRA C GTS,SAAB 9-3 Cabriolet (YS3D),9-3 (YS3F)

49626 **Spurstangenkopf, Tie Rod End, Rotule de barre de connexion**

OPEL FRONTERA B (6B_),MONTEREY B,VAUXHALL FRONTERA Mk II,MONTEREY Mk II

49627 **Spurstangenkopf, Tie Rod End, Rotule de barre de connexion**

OPEL AGILA (H00),VAUXHALL AGILA

49628 **Lenker, Radaufhängung, Track Control Arm, Bras de liaison, suspension de roue**

OPEL VECTRA B Caravan (31_),VECTRA B CC (38_),VECTRA B (36_),VAUXHALL VECTRA,VECTRA CC,VECTRA Estate

49640 **Spurstangenkopf, Tie Rod End, Rotule de barre de connexion**

FORD COUGAR (EC_),MONDEO II (BAP),MONDEO II Kombi (BNP),MONDEO II Stufenheck (BFP)

49641 **Spurstangenkopf, Tie Rod End, Rotule de barre de connexion**

FORD COUGAR (EC_),MONDEO II (BAP),MONDEO II Kombi (BNP),MONDEO II Stufenheck (BFP)

49642 **Axialgelenk, Spurstange, Inner Tie Rod, Rotule de direction intérieure, barre de connexion**

FORD MONDEO II (BAP),MONDEO II Kombi (BNP),MONDEO II Stufenheck (BFP)

49643 **Axialgelenk, Spurstange, Inner Tie Rod, Rotule de direction intérieure, barre de connexion**

FORD MONDEO II (BAP),MONDEO II Kombi (BNP),MONDEO II Stufenheck (BFP)

49644 **Axialgelenk, Spurstange, Inner Tie Rod, Rotule de direction intérieure, barre de connexion**

FORD TRANSIT Bus (E_ _),TRANSIT Kasten (E_ _),TRANSIT Pritsche/Fahrgestell (E_ _)

49645 **Spurstangenkopf, Tie Rod End, Rotule de barre de connexion**

FORD TRANSIT Bus (T_ _),TRANSIT Kasten (T_ _),TRANSIT Pritsche/Fahrgestell (T_ _)

49646	**Spurstangenkopf, Tie Rod End, Rotule de barre de connexion**
	FORD TRANSIT Bus (T_ _),TRANSIT Kasten (T_ _),TRANSIT Pritsche/Fahrgestell (T_ _)
49648	**Trag-/Führungsgelenk, Ball Joint, Rotule de suspension**
	DAIMLER DAIMLER (X300),XJ 40, 81,2.8 - 5.3,JAGUAR XJ,XJ (NAW, NBW),XJ (XJ 40, 81),XJ (X300),XJS Coupe,XJSC Convertible
49649	**Trag-/Führungsgelenk, Ball Joint, Rotule de suspension**
	DAIMLER DAIMLER (X300),XJ 40, 81,2.8 - 5.3,JAGUAR XJ,XJ (NAW, NBW),XJ (XJ 40, 81),XJ (X300),XJS Coupe,XJSC Convertible
49650	**Lenker, Radaufhängung, Track Control Arm, Bras de liaison, suspension de roue**
	BMW 7 (E38)
49651	**Lenker, Radaufhängung, Track Control Arm, Bras de liaison, suspension de roue**
	BMW 7 (E38)
49652	**Lenker, Radaufhängung, Track Control Arm, Bras de liaison, suspension de roue**
	BMW 5 (E39),5 Touring (E39),7 (E38)
49653	**Spurstangenkopf, Tie Rod End, Rotule de barre de connexion**
	BMW 3 Cabriolet (E46),3 Coupe (E46),3 (E46),3 Touring (E46)
49654	**Spurstangenkopf, Tie Rod End, Rotule de barre de connexion**
	BMW 3 Cabriolet (E46),3 Coupe (E46),3 (E46),3 Touring (E46)
49655	**Lenker, Radaufhängung, Track Control Arm, Bras de liaison, suspension de roue**
	BMW 7 (E38)
49656	**Lenker, Radaufhängung, Track Control Arm, Bras de liaison, suspension de roue**
	BMW 7 (E38)
49657	**Lenkhebel, Steering Lever, Levier de commande de direction**
	BMW 5 (E28)
49658	**Spurstange, Rod Assembly, Barre de connexion**
	BMW 7 (E32)
49660	**Spurstange, Rod Assembly, Barre de connexion**
	BMW 5 (E34),5 Touring (E34)
49661	**Lenker, Radaufhängung, Track Control Arm, Bras de liaison, suspension de roue**
	ALPINA B10 (E34),B10 Kombi (E34),B11 (E32),B12 (E32),BMW 5 (E28),5 (E34),5 Touring (E34),6 (E24),7 (E32)
49662	**Lenker, Radaufhängung, Track Control Arm, Bras de liaison, suspension de roue**
	ALPINA B10 (E34),B10 Kombi (E34),B11 (E32),B12 (E32),BMW 5 (E28),5 (E34),5 Touring (E34),6 (E24),7 (E32)
49663HPS	**Stange/Strebe, Stabilisator, Link Stabiliser, Entretoise/tige, stabilisateur**
	ALPINA B10 (E39),B10 Kombi (E39),D10 (E39),D10 Kombi (E39),BMW 5 (E39),5 Touring (E39)
49664	**Lenker, Radaufhängung, Track Control Arm, Bras de liaison, suspension de roue**
	SEAT TOLEDO I (1L),VW CORRADO (53I),GOLF III Variant (1H5),GOLF III (1H1),VENTO (1H2)
49665	**Lenker, Radaufhängung, Track Control Arm, Bras de liaison, suspension de roue**
	SEAT TOLEDO I (1L),VW CORRADO (53I),GOLF III Variant (1H5),GOLF III (1H1),VENTO (1H2)
49666	**Lenker, Radaufhängung, Track Control Arm, Bras de liaison, suspension de roue**
	SEAT TOLEDO I (1L),VW CORRADO (53I),GOLF III Variant (1H5),GOLF III (1H1),VENTO (1H2)
49666/7	**Lenker, Radaufhängung, Track Control Arm, Bras de liaison, suspension de roue**
	SEAT TOLEDO I (1L),VW CORRADO (53I),GOLF III Variant (1H5),GOLF III (1H1),VENTO (1H2)
49667	**Lenker, Radaufhängung, Track Control Arm, Bras de liaison, suspension de roue**
	SEAT TOLEDO I (1L),VW CORRADO (53I),GOLF III Variant (1H5),GOLF III (1H1),VENTO (1H2)
49667/7	**Lenker, Radaufhängung, Track Control Arm, Bras de liaison, suspension de roue**
	SEAT TOLEDO I (1L),VW CORRADO (53I),GOLF III Variant (1H5),GOLF III (1H1),VENTO (1H2)
49672	**Spurstange, Rod Assembly, Barre de connexion**
	VW CORRADO (53I),GOLF III Cabriolet (1E7),GOLF III Variant (1H5),GOLF III (1H1),GOLF IV Cabriolet (1E7),VENTO (1H2)
49672/1	**Axialgelenk, Spurstange, Inner Tie Rod, Rotule de direction intérieure, barre de connexion**
	VW CORRADO (53I),GOLF III Cabriolet (1E7),GOLF III Variant (1H5),GOLF III (1H1),GOLF IV Cabriolet (1E7),VENTO (1H2)
49673	**Spurstange, Rod Assembly, Barre de connexion**
	VW CORRADO (53I),GOLF III Cabriolet (1E7),GOLF III Variant (1H5),GOLF III (1H1),GOLF IV Cabriolet (1E7),VENTO (1H2)
49674	**Spurstange, Rod Assembly, Barre de connexion**
	VW PASSAT Variant (3A5, 35I),PASSAT (3A2, 35I)
49674/1	**Axialgelenk, Spurstange, Inner Tie Rod, Rotule de direction intérieure, barre de connexion**
	VW PASSAT Variant (3A5, 35I),PASSAT (3A2, 35I)
49675	**Spurstange, Rod Assembly, Barre de connexion**
	VW PASSAT Variant (3A5, 35I),PASSAT (3A2, 35I)
49676/1	**Lenker, Radaufhängung, Track Control Arm, Bras de liaison, suspension de roue**
	ALPINA B3 Coupe (E46),B3 (E46),B3 Kombi (E46),BMW Z4 Coupe,Z4 (E85),3 Cabriolet (E46),3 Compact (E46),3 Coupe (E46),3 (E46),3 Touring (E46),BRILLIANCE BMW 3 SERIES (E46)

49677/1 — **Lenker, Radaufhängung, Track Control Arm, Bras de liaison, suspension de roue**

ALPINA B3 Coupe (E46),B3 (E46),B3 Kombi (E46),BMW Z4 Coupe,Z4 (E85),3 Cabriolet (E46),3 Compact (E46),3 Coupe (E46),3 (E46),3 Touring (E46),BRILLIANCE BMW 3 SERIES (E46)

49678 — **Lenker, Radaufhängung, Track Control Arm, Bras de liaison, suspension de roue**

ALPINA B11 (E32),B12 Coupe (E31),B12 (E32),BMW 7 (E32),8 (E31)

49679 — **Lenker, Radaufhängung, Track Control Arm, Bras de liaison, suspension de roue**

ALPINA B11 (E32),B12 Coupe (E31),B12 (E32),BMW 7 (E32),8 (E31)

49680OES — **Lenker, Radaufhängung, Track Control Arm, Bras de liaison, suspension de roue**

AUDI ALLROAD (4BH),A4 Avant (8D5, B5),A4 Avant (8ED),A4 Avant (8E5, B6),A4 Cabriolet (8H7, 8HE),A4 (8D2, B5),A4 (8EC),A4 (8E2, B6),A6 Avant (4B, C5),A6 (4B, C5),FAW-AUDI A4 Stufenheck (B6),A4 Stufenheck (B7),A6 Stufenheck (C5),A6 Stufenheck (4A2, 4B2),SEAT EXEO ST (3R5),EXEO (3R2),SKODA SUPERB (3U4),SVW PASSAT Stufenheck,VW PASSAT Variant (3B5),PASSAT Variant (3B6),PASSAT (3B2),PASSAT (3B3)

49681OES — **Lenker, Radaufhängung, Track Control Arm, Bras de liaison, suspension de roue**

AUDI ALLROAD (4BH),A4 Avant (8D5, B5),A4 Avant (8ED),A4 Avant (8E5, B6),A4 Cabriolet (8H7, 8HE),A4 (8D2, B5),A4 (8EC),A4 (8E2, B6),A6 Avant (4B, C5),A6 (4B, C5),FAW-AUDI A4 Stufenheck (B6),A4 Stufenheck (B7),A6 Stufenheck (C5),A6 Stufenheck (4A2, 4B2),SEAT EXEO ST (3R5),EXEO (3R2),SKODA SUPERB (3U4),SVW PASSAT Stufenheck,VW PASSAT Variant (3B5),PASSAT Variant (3B6),PASSAT (3B2),PASSAT (3B3)

49682 — **Stange/Strebe, Stabilisator, Link Stabiliser, Entretoise/tige, stabilisateur**

AUDI A4 Avant (8D5, B5),A4 (8D2, B5)

49683OES — **Stange/Strebe, Stabilisator, Link Stabiliser, Entretoise/tige, stabilisateur**

AUDI A4 Avant (8D5, B5),A4 (8D2, B5),A6 Avant (4B, C5),A6 (4B, C5),FAW-AUDI A4 Stufenheck (8D2),A6 Stufenheck (C5),A6 Stufenheck (4A2, 4B2),SKODA SUPERB (3U4),SVW PASSAT Stufenheck,VW PASSAT Variant (3B5),PASSAT Variant (3B6),PASSAT (3B2),PASSAT (3B3)

49683/1OES — **Stange/Strebe, Stabilisator, Link Stabiliser, Entretoise/tige, stabilisateur**

AUDI ALLROAD (4BH),A4 Avant (8D5, B5),A4 (8D2, B5),A4 (8E2, B6),A6 Avant (4A, C4),A6 Avant (4B, C5),A6 (4A, C4),A6 (4B, C5),FAW-AUDI A6 Stufenheck (C5),A6 Stufenheck (4A2, 4B2),SKODA SUPERB (3U4),SVW PASSAT Stufenheck,VW PASSAT Variant (3B5),PASSAT Variant (3B6),PASSAT (3B2),PASSAT (3B3)

49684OES — **Stange/Strebe, Stabilisator, Link Stabiliser, Entretoise/tige, stabilisateur**

AUDI A4 Avant (8D5, B5),A4 (8D2, B5),A6 Avant (4B, C5),A6 (4B, C5),FAW-AUDI A6 Stufenheck (C5),A6 Stufenheck (4A2, 4B2),SKODA SUPERB (3U4),SVW PASSAT Stufenheck,VW PASSAT Variant (3B5),PASSAT Variant (3B6),PASSAT (3B2),PASSAT (3B3)

49684/1OES — **Stange/Strebe, Stabilisator, Link Stabiliser, Entretoise/tige, stabilisateur**

AUDI ALLROAD (4BH),A4 Avant (8D5, B5),A4 (8D2, B5),A6 Avant (4B, C5),A6 (4B, C5),FAW-AUDI A6 Stufenheck (C5),A6 Stufenheck (4A2, 4B2),SKODA SUPERB (3U4),SVW PASSAT Stufenheck,VW PASSAT Variant (3B5),PASSAT Variant (3B6),PASSAT (3B2),PASSAT (3B3)

49685OES — **Stange/Strebe, Stabilisator, Link Stabiliser, Entretoise/tige, stabilisateur**

AUDI ALLROAD (4BH),A8 (4D2, 4D8)

49686 — **Stange/Strebe, Stabilisator, Link Stabiliser, Entretoise/tige, stabilisateur**

AUDI A6 Avant (4A, C4),A6 (4A, C4),100 Avant (4A, C4),100 (4A, C4)

49688 — **Stange/Strebe, Stabilisator, Link Stabiliser, Entretoise/tige, stabilisateur**

AUDI A4 Avant (8D5, B5),A4 (8D2, B5),80 Avant (8C, B4),80 (8C, B4)

49689 — **Stange/Strebe, Stabilisator, Link Stabiliser, Entretoise/tige, stabilisateur**

AUDI A4 Avant (8D5, B5),A4 (8D2, B5),80 Avant (8C, B4),80 (8C, B4)

49690 — **Spurstange, Rod Assembly, Barre de connexion**

AUDI A3 (8L1),SEAT LEON (1M1),TOLEDO II (1M2),SKODA OCTAVIA Combi (1U5),OCTAVIA (1U2),VW BORA Kombi (1J6),BORA (1J2),GOLF IV Variant (1J5),GOLF IV (1J1),NEW BEETLE (9C1, 1C1)

49690/1 — **Axialgelenk, Spurstange, Inner Tie Rod, Rotule de direction intérieure, barre de connexion**

AUDI A3 (8L1),SEAT TOLEDO II (1M2),SKODA OCTAVIA Combi (1U5),OCTAVIA (1U2),VW BORA Kombi (1J6),BORA (1J2),GOLF IV Variant (1J5),GOLF IV (1J1),NEW BEETLE (9C1, 1C1)

49691 — **Spurstange, Rod Assembly, Barre de connexion**

AUDI A3 (8L1),SEAT LEON (1M1),TOLEDO II (1M2),SKODA OCTAVIA Combi (1U5),OCTAVIA (1U2),VW BORA Kombi (1J6),BORA (1J2),GOLF IV Variant (1J5),GOLF IV (1J1),NEW BEETLE (9C1, 1C1)

49692 — **Spurstange, Rod Assembly, Barre de connexion**

VW PASSAT Variant (3A5, 35I),PASSAT (3A2, 35I)

49693 — **Spurstange, Rod Assembly, Barre de connexion**

VW PASSAT Variant (3A5, 35I),PASSAT (3A2, 35I)

49694 — **Lenker, Radaufhängung, Track Control Arm, Bras de liaison, suspension de roue**

ALPINA B12 (E38),BMW 7 (E38)

49695 — **Lenker, Radaufhängung, Track Control Arm, Bras de liaison, suspension de roue**

ALPINA B12 (E38),BMW 7 (E38)

49696/1 — **Lenker, Radaufhängung, Track Control Arm, Bras de liaison, suspension de roue**

AUDI 100 Avant (44, 44Q, C3),100 (44, 44Q, C3),200 Avant (44, 44Q),200 (43),200 (44, 44Q)

49697/1 — **Lenker, Radaufhängung, Track Control Arm, Bras de liaison, suspension de roue**

AUDI 100 Avant (44, 44Q, C3),100 (44, 44Q, C3),200 Avant (44, 44Q),200 (43),200 (44, 44Q)

49698 — **Lenker, Radaufhängung, Track Control Arm, Bras de liaison, suspension de roue**

AUDI 100 Avant (44, 44Q, C3),100 (44, 44Q, C3)

49699 — **Lenker, Radaufhängung, Track Control Arm, Bras de liaison, suspension de roue**

AUDI 100 Avant (44, 44Q, C3),100 (44, 44Q, C3)

49700 — **Spurstangenkopf, Tie Rod End, Rotule de barre de connexion**

AUDI A3 (8L1),SEAT LEON (1M1),TOLEDO II (1M2),SKODA OCTAVIA Combi (1U5),OCTAVIA (1U2),VW BORA Kombi (1J6),BORA (1J2),GOLF IV Variant (1J5),GOLF IV (1J1),NEW BEETLE (9C1, 1C1)

49701 **Spurstangenkopf, Tie Rod End, Rotule de barre de connexion**

AUDI A3 (8L1),SEAT LEON (1M1),TOLEDO II (1M2),SKODA OCTAVIA Combi (1U5),OCTAVIA (1U2),VW BORA Kombi (1J6),BORA (1J2),GOLF IV Variant (1J5),GOLF IV (1J1),NEW BEETLE (9C1, 1C1)

49702 **Trag-/Führungsgelenk, Ball Joint, Rotule de suspension**

AUDI A3 (8L1),SEAT LEON (1M1),TOLEDO II (1M2),SKODA OCTAVIA (1U2),VW BORA Kombi (1J6),BORA (1J2),GOLF IV Variant (1J5),GOLF IV (1J1),NEW BEETLE (9C1, 1C1)

49702/1 **Trag-/Führungsgelenk, Ball Joint, Rotule de suspension**

AUDI A2 (8Z0),A3 (8L1),SEAT LEON (1M1),LEON (1P1),TOLEDO II (1M2),SKODA OCTAVIA Combi (1U5),OCTAVIA Combi (1Z5),OCTAVIA (1U2),OCTAVIA (1Z3),VW BORA Kombi (1J6),BORA (1J2),GOLF IV Variant (1J5),GOLF IV (1J1),NEW BEETLE Cabriolet (1Y7),NEW BEETLE (9C1, 1C1)

49703 **Trag-/Führungsgelenk, Ball Joint, Rotule de suspension**

AUDI A3 (8L1),SEAT LEON (1M1),TOLEDO II (1M2),SKODA OCTAVIA (1U2),VW BORA Kombi (1J6),BORA (1J2),GOLF IV Variant (1J5),GOLF IV (1J1),NEW BEETLE (9C1, 1C1)

49703/1 **Trag-/Führungsgelenk, Ball Joint, Rotule de suspension**

AUDI A2 (8Z0),A3 (8L1),SEAT LEON (1M1),LEON (1P1),TOLEDO II (1M2),SKODA OCTAVIA Combi (1U5),OCTAVIA Combi (1Z5),OCTAVIA (1U2),OCTAVIA (1Z3),VW BORA Kombi (1J6),BORA (1J2),GOLF IV Variant (1J5),GOLF IV (1J1),NEW BEETLE Cabriolet (1Y7),NEW BEETLE (9C1, 1C1)

49704 **Lenker, Radaufhängung, Track Control Arm, Bras de liaison, suspension de roue**

AUDI A3 (8L1),SEAT LEON (1M1),TOLEDO II (1M2),SKODA OCTAVIA Combi (1U5),OCTAVIA (1U2),VW BORA Kombi (1J6),BORA (1J2),GOLF III Variant (1H5),GOLF III (1H1),GOLF IV Variant (1J5),GOLF IV (1J1),NEW BEETLE (9C1, 1C1)

49704/1 **Lenker, Radaufhängung, Track Control Arm, Bras de liaison, suspension de roue**

AUDI A3 (8L1),SEAT LEON (1M1),TOLEDO II (1M2),SKODA OCTAVIA Combi (1U5),OCTAVIA (1U2),VW BORA Kombi (1J6),BORA (1J2),GOLF III Variant (1H5),GOLF III (1H1),GOLF IV Variant (1J5),GOLF IV (1J1),NEW BEETLE (9C1, 1C1)

49704/2 **Lenker, Radaufhängung, Track Control Arm, Bras de liaison, suspension de roue**

AUDI A3 (8L1),SEAT LEON (1M1),TOLEDO II (1M2),SKODA OCTAVIA Combi (1U5),OCTAVIA (1U2),VW BORA Kombi (1J6),BORA (1J2),GOLF III Variant (1H5),GOLF III (1H1),GOLF IV Variant (1J5),GOLF IV (1J1),NEW BEETLE (9C1, 1C1)

49705 **Lenker, Radaufhängung, Track Control Arm, Bras de liaison, suspension de roue**

AUDI CABRIOLET (8G7, B4),COUPE (89, 8B),80 Avant (8C, B4),80 (8C, B4)

49705/1 **Lenker, Radaufhängung, Track Control Arm, Bras de liaison, suspension de roue**

AUDI CABRIOLET (8G7, B4),COUPE (89, 8B),80 Avant (8C, B4),80 (8C, B4)

49706 **Lenker, Radaufhängung, Track Control Arm, Bras de liaison, suspension de roue**

ALPINE A310,AUDI CABRIOLET (8G7, B4),COUPE (89, 8B),80 Avant (8C, B4),80 (8C, B4)

49706/1 **Lenker, Radaufhängung, Track Control Arm, Bras de liaison, suspension de roue**

AUDI CABRIOLET (8G7, B4),COUPE (89, 8B),80 Avant (8C, B4),80 (8C, B4)

49707HPS **Spurstangenkopf, Tie Rod End, Rotule de barre de connexion**

AUDI ALLROAD (4BH),A4 Avant (8D5, B5),A4 (8D2, B5),A4 (8E2, B6),A6 Avant (4A, C4),A6 Avant (4B, C5),A6 (4A, C4),A6 (4B, C5),A8 (4D2, 4D8),FAW-AUDI A4 Stufenheck (B6),A6 Stufenheck (C5),A6 Stufenheck (4A2, 4B2),SKODA SUPERB (3U4),SVW PASSAT Stufenheck,VW PASSAT Variant (3B5),PASSAT Variant (3B6),PASSAT (3B2),PASSAT (3B3)

49707OES **Spurstangenkopf, Tie Rod End, Rotule de barre de connexion**

AUDI ALLROAD (4BH),A4 Avant (8D5, B5),A4 (8D2, B5),A4 (8E2, B6),A6 Avant (4A, C4),A6 Avant (4B, C5),A6 (4A, C4),A6 (4B, C5),A8 (4D2, 4D8),FAW-AUDI A4 Stufenheck (B6),A6 Stufenheck (C5),A6 Stufenheck (4A2, 4B2),SKODA SUPERB (3U4),SVW PASSAT Stufenheck,VW PASSAT Variant (3A5, 35I),PASSAT Variant (3B5),PASSAT Variant (3B6),PASSAT (3A2, 35I),PASSAT (3B2),PASSAT (3B3)

49708OES **Lenker, Radaufhängung, Track Control Arm, Bras de liaison, suspension de roue**

AUDI ALLROAD (4BH),A4 Avant (8D5, B5),A4 Avant (8E5, B6),A4 Cabriolet (8H7, 8HE),A4 (8D2, B5),A4 (8E2, B6),A6 Avant (4B, C5),A6 (4B, C5),A8 (4D2, 4D8),FAW-AUDI A4 Stufenheck (B6),A4 Stufenheck (8D2),A6 Stufenheck (C5),A6 Stufenheck (4A2, 4B2),SKODA SUPERB (3U4),SVW PASSAT Stufenheck,VW PASSAT Variant (3B5),PASSAT Variant (3B6),PASSAT (3B2),PASSAT (3B3)

49709OES **Lenker, Radaufhängung, Track Control Arm, Bras de liaison, suspension de roue**

AUDI ALLROAD (4BH),A4 Avant (8D5, B5),A4 Avant (8E5, B6),A4 Cabriolet (8H7, 8HE),A4 (8D2, B5),A4 (8E2, B6),A6 Avant (4B, C5),A6 (4B, C5),A8 (4D2, 4D8),FAW-AUDI A4 Stufenheck (B6),A4 Stufenheck (8D2),A6 Stufenheck (C5),A6 Stufenheck (4A2, 4B2),SKODA SUPERB (3U4),VW PASSAT Variant (3B5),PASSAT Variant (3B6),PASSAT (3B2),PASSAT (3B3)

49710OES **Lenker, Radaufhängung, Track Control Arm, Bras de liaison, suspension de roue**

AUDI A4 Avant (8D5, B5),A4 (8D2, B5),A6 Avant (4B, C5),A6 (4B, C5),A8 (4D2, 4D8),FAW-AUDI A6 Stufenheck (C5),A6 Stufenheck (4A2, 4B2),SKODA SUPERB (3U4),SVW PASSAT Stufenheck,VW PASSAT Variant (3B5),PASSAT Variant (3B6),PASSAT (3B2),PASSAT (3B3)

49713OES **Lenker, Radaufhängung, Track Control Arm, Bras de liaison, suspension de roue**

AUDI A8 (4D2, 4D8)

49714 **Stange/Strebe, Stabilisator, Link Stabiliser, Entretoise/tige, stabilisateur**

AUDI A8 (4D2, 4D8)

49715 **Stange/Strebe, Stabilisator, Link Stabiliser, Entretoise/tige, stabilisateur**

AUDI A8 (4D2, 4D8)

49716 **Stange/Strebe, Stabilisator, Link Stabiliser, Entretoise/tige, stabilisateur**

AUDI A4 Avant (8D5, B5),A4 (8D2, B5),A8 (4D2, 4D8)

49717 **Spurstangenkopf, Tie Rod End, Rotule de barre de connexion**

AUDI A6 Avant (4A, C4),A6 (4A, C4),V8 (44_, 4C_),100 Avant (4A, C4),100 Avant (43, C2),100 Avant (44, 44Q, C3),100 (4A, C4),100 (44, 44Q, C3),200 Avant (44, 44Q),200 (43),200 (44, 44Q)

49718 **Spurstangenkopf, Tie Rod End, Rotule de barre de connexion**

AUDI A6 Avant (4A, C4),A6 Avant (4B, C5),A6 (4A, C4),A6 (4B, C5),V8 (44_, 4C_),100 Avant (4A, C4),100 Avant (43, C2),100 Avant (44, 44Q, C3),100 (4A, C4),100 (44, 44Q, C3),200 Avant (44, 44Q),200 (43),200 (44, 44Q)

49721 **Spurstange, Rod Assembly, Barre de connexion**

ALPINA B10 (E39),B10 Kombi (E39),D10 (E39),D10 Kombi (E39),BMW 5 (E39),5 Touring (E39)

49722 — **Spurstange, Rod Assembly, Barre de connexion**

ALPINA B10 (E39),B10 Kombi (E39),D10 (E39),D10 Kombi (E39),BMW 5 (E39),5 Touring (E39)

49723 — **Lenker, Radaufhängung, Track Control Arm, Bras de liaison, suspension de roue**

ALPINA B10 (E39),B10 Kombi (E39),D10 (E39),D10 Kombi (E39),BMW 5 (E39),5 Touring (E39)

49724 — **Lenker, Radaufhängung, Track Control Arm, Bras de liaison, suspension de roue**

ALPINA B10 (E39),B10 Kombi (E39),D10 (E39),D10 Kombi (E39),BMW 5 (E39),5 Touring (E39)

49725 — **Stange/Strebe, Stabilisator, Link Stabiliser, Entretoise/tige, stabilisateur**

ALPINA B10 Kombi (E39),D10 (E39),D10 Kombi (E39),BMW 5 (E39),5 Touring (E39)

49725HPS — **Stange/Strebe, Stabilisator, Link Stabiliser, Entretoise/tige, stabilisateur**

ALPINA B10 Kombi (E39),D10 (E39),D10 Kombi (E39),BMW 5 (E39),5 Touring (E39)

49726 — **Stange/Strebe, Stabilisator, Link Stabiliser, Entretoise/tige, stabilisateur**

ALPINA B10 Kombi (E39),D10 (E39),D10 Kombi (E39),BMW 5 (E39),5 Touring (E39)

49726HPS — **Stange/Strebe, Stabilisator, Link Stabiliser, Entretoise/tige, stabilisateur**

ALPINA B10 Kombi (E39),D10 (E39),D10 Kombi (E39),BMW 5 (E39),5 Touring (E39)

49727 — **Lenker, Radaufhängung, Track Control Arm, Bras de liaison, suspension de roue**

ALPINA B10 (E39),B10 Kombi (E39),D10 (E39),D10 Kombi (E39),BMW Z8,5 (E39),5 Touring (E39)

49728 — **Lenker, Radaufhängung, Track Control Arm, Bras de liaison, suspension de roue**

ALPINA B10 (E39),B10 Kombi (E39),D10 (E39),D10 Kombi (E39),BMW Z8,5 (E39),5 Touring (E39)

49729 — **Stange/Strebe, Stabilisator, Link Stabiliser, Entretoise/tige, stabilisateur**

AUDI A8 (4D2, 4D8)

49730 — **Spurstange, Rod Assembly, Barre de connexion**

ALPINA B7 Coupe (E24),B7 (E28),B9 Coupe (E24),B9 (E28),BMW 5 (E28),6 (E24)

49731 — **Spurstange, Rod Assembly, Barre de connexion**

ALPINA B7 Coupe (E24),B7 (E28),B9 Coupe (E24),B9 (E28),BMW 5 (E28),6 (E24)

49732 — **Spurstange, Rod Assembly, Barre de connexion**

AUDI A4 Avant (8D5, B5),A4 (8D2, B5),A4 (8E2, B6),A6 Avant (4B, C5),A6 (4B, C5),A8 (4D2, 4D8),SKODA SUPERB (3U4),VW PASSAT Variant (3B5),PASSAT Variant (3B6),PASSAT (3B2),PASSAT (3B3)

49733 — **Lenker, Radaufhängung, Track Control Arm, Bras de liaison, suspension de roue**

ALPINA B3 Cabriolet (E30),B3 (E30),B3 Kombi (E30),C1 (E30),C2 Cabriolet (E30),C2 (E30),BMW Z1,3 Cabriolet (E30),3 (E30),3 Touring (E30)

49734 — **Lenker, Radaufhängung, Track Control Arm, Bras de liaison, suspension de roue**

ALPINA B3 Cabriolet (E30),B3 (E30),B3 Kombi (E30),C1 (E30),C2 Cabriolet (E30),C2 (E30),BMW Z1,3 Cabriolet (E30),3 (E30),3 Touring (E30)

49735 — **Spurstangenkopf, Tie Rod End, Rotule de barre de connexion**

BMW 5 (E39),5 Touring (E39)

49736 — **Spurstangenkopf, Tie Rod End, Rotule de barre de connexion**

BMW 5 (E39),5 Touring (E39)

49737 — **Axialgelenk, Spurstange, Inner Tie Rod, Rotule de direction intérieure, barre de connexion**

FORD ESCORT CLASSIC (AAL, ABL),ESCORT CLASSIC Turnier (ANL),ESCORT V Cabriolet (ALL),ESCORT V (GAL),ESCORT V Kombi (GAL, AVL),ESCORT VI Cabriolet (ALL),ESCORT VI (GAL),ESCORT VI Kombi (GAL),ESCORT VI Stufenheck (GAL),ESCORT VII Cabriolet (ALL),ESCORT VII (GAL, AAL, ABL),ESCORT VII Kombi (GAL, ANL),ESCORT VII Stufenheck (GAL, AFL),ESCORT ´91 Express (AVL),ESCORT ´95 Express (AVL),ORION III (GAL)

49738 — **Axialgelenk, Spurstange, Inner Tie Rod, Rotule de direction intérieure, barre de connexion**

AUDI ALLROAD (4BH),A4 Avant (8D5, B5),A4 Avant (8ED),A4 Avant (8E5, B6),A4 Cabriolet (8H7, 8HE),A4 (8D2, B5),A4 (8EC),A4 (8E2, B6),A6 Avant (4B, C5),A6 (4B, C5),A8 (4D2, 4D8),FAW-AUDI A4 Stufenheck (B6),A4 Stufenheck (B7),A4 Stufenheck (8D2),A6 Stufenheck (C5),A6 Stufenheck (4A2, 4B2),SEAT EXEO ST (3R5),EXEO (3R2),SKODA SUPERB (3U4),SVW PASSAT Stufenheck,VW PASSAT Variant (3B5),PASSAT Variant (3B6),PASSAT (3B2),PASSAT (3B3)

49739 — **Spurstangenkopf, Tie Rod End, Rotule de barre de connexion**

ALPINA B12 (E38),BMW 7 (E38)

49740 — **Spurstangenkopf, Tie Rod End, Rotule de barre de connexion**

ALPINA B12 (E38),BMW 7 (E38)

49741 — **Spurstange, Rod Assembly, Barre de connexion**

ALPINA B12 (E38),BMW 7 (E38)

49742 — **Spurstangenkopf, Tie Rod End, Rotule de barre de connexion**

ISUZU CAMPO (KB),TROOPER Soft Top (UBS),TROOPER (UBS),OPEL CAMPO (TF_),FRONTERA A Sport (5_SUD2),FRONTERA A (5_MWL4),MONTEREY A (UBS_),VAUXHALL BRAVA Pick-up,MONTEREY,MONTEREY Mk II

49743 — **Spurstangenkopf, Tie Rod End, Rotule de barre de connexion**

ISUZU CAMPO (KB),TROOPER Soft Top (UBS),TROOPER (UBS),OPEL CAMPO (TF_),FRONTERA A Sport (5_SUD2),FRONTERA A (5_MWL4),MONTEREY A (UBS_),MONTEREY B,VAUXHALL BRAVA Pick-up,MONTEREY,MONTEREY Mk II

49744 — **Trag-/Führungsgelenk, Ball Joint, Rotule de suspension**

ISUZU CAMPO (KB),TROOPER Soft Top (UBS),TROOPER (UBS),OPEL CAMPO (TF_),FRONTERA A Sport (5_SUD2),FRONTERA A (5_MWL4),FRONTERA B (6B_),MONTEREY A (UBS_),MONTEREY B,VAUXHALL BRAVA Pick-up,FRONTERA,FRONTERA Sport,MONTEREY,MONTEREY Mk II

49745 — **Trag-/Führungsgelenk, Ball Joint, Rotule de suspension**

ISUZU CAMPO (KB),TROOPER Soft Top (UBS),TROOPER (UBS),OPEL CAMPO (TF_),FRONTERA A Sport (5_SUD2),FRONTERA A (5_MWL4),FRONTERA B (6B_),MONTEREY A (UBS_),MONTEREY B,VAUXHALL BRAVA Pick-up,FRONTERA,FRONTERA Mk II,FRONTERA Sport,MONTEREY,MONTEREY Mk II

49746 **Axialgelenk, Spurstange, Inner Tie Rod, Rotule de direction intérieure, barre de connexion**

BMW 5 (E39),5 Touring (E39)

49749HPS **Stange/Strebe, Stabilisator, Link Stabiliser, Entretoise/tige, stabilisateur**

FIAT CROMA (194),OPEL SIGNUM,VECTRA C,VECTRA C Caravan,VECTRA C GTS,SAAB 9-3 Cabriolet (YS3F),9-3 (YS3F)

49750 **Spurstange, Rod Assembly, Barre de connexion**

OPEL ASTRA F Cabriolet (53_B),ASTRA F Caravan (51_, 52_),ASTRA F CC (53_, 54_, 58_, 59_),ASTRA F Van (55_),ASTRA F (56_, 57_),CALIBRA A (85_),VECTRA A CC (88_, 89_),VECTRA A (86_, 87_),SAAB 900 II,900 II Cabriolet,900 II Coupe,9-3 Cabriolet (YS3D),9-3 (YS3D),VAUXHALL ASTRA Mk III,ASTRA Mk III CC,ASTRA Mk III Estate,ASTRAVAN Mk III,CALIBRA,CAVALIER Mk III CC,CAVALIER Mk III (87)

49751 **Spurstange, Rod Assembly, Barre de connexion**

OPEL ASTRA F Cabriolet (53_B),ASTRA F Caravan (51_, 52_),ASTRA F CC (53_, 54_, 58_, 59_),ASTRA F Van (55_),ASTRA F (56_, 57_),CALIBRA A (85_),VECTRA A CC (88_, 89_),VECTRA A (86_, 87_),SAAB 900 II,900 II Cabriolet,900 II Coupe,9-3 Cabriolet (YS3D),9-3 (YS3D),VAUXHALL ASTRA Mk III,ASTRA Mk III CC,ASTRA Mk III Estate,ASTRAVAN Mk III,CALIBRA,CAVALIER Mk III CC,CAVALIER Mk III (87)

49752 **Axialgelenk, Spurstange, Inner Tie Rod, Rotule de direction intérieure, barre de connexion**

OPEL ASTRA F Cabriolet (53_B),ASTRA F Caravan (51_, 52_),ASTRA F CC (53_, 54_, 58_, 59_),ASTRA F Van (55_),ASTRA F (56_, 57_),CALIBRA A (85_),VECTRA A CC (88_, 89_),VECTRA A (86_, 87_),SAAB 900 II,900 II Cabriolet,900 II Coupe,9-3 Cabriolet (YS3D),VAUXHALL ASTRA Mk III,ASTRA Mk III CC,ASTRA Mk III Convertible,ASTRA Mk III Estate,ASTRAVAN Mk III,CALIBRA,CAVALIER Mk III CC,CAVALIER Mk III (87)

49753 **Axialgelenk, Spurstange, Inner Tie Rod, Rotule de direction intérieure, barre de connexion**

OPEL ASTRA F Cabriolet (53_B),ASTRA F Caravan (51_, 52_),ASTRA F CC (53_, 54_, 58_, 59_),ASTRA F Van (55_),ASTRA F (56_, 57_),CALIBRA A (85_),VECTRA A CC (88_, 89_),VECTRA A (86_, 87_),SAAB 900 II,900 II Cabriolet,900 II Coupe,9-3 Cabriolet (YS3D),VAUXHALL ASTRA Mk III,ASTRA Mk III CC,ASTRA Mk III Convertible,ASTRA Mk III Estate,ASTRAVAN Mk III,CALIBRA,CAVALIER Mk III CC,CAVALIER Mk III (87)

49754 **Axialgelenk, Spurstange, Inner Tie Rod, Rotule de direction intérieure, barre de connexion**

OPEL COMBO (71_),CORSA B Kasten (73_),CORSA B (73_, 78_, 79_),TIGRA (95_),VAUXHALL COMBO,CORSA Mk II,CORSAVAN,NOVA,NOVA CC,NOVAVAN,TIGRA

49755 **Axialgelenk, Spurstange, Inner Tie Rod, Rotule de direction intérieure, barre de connexion**

OPEL COMBO (71_),CORSA B Kasten (73_),CORSA B (73_, 78_, 79_),TIGRA (95_),VAUXHALL COMBO,CORSA Mk II,CORSAVAN,NOVA,NOVA CC,NOVAVAN,TIGRA

49756 **Lenker, Radaufhängung, Track Control Arm, Bras de liaison, suspension de roue**

DAEWOO ESPERO (KLEJ),LANOS (KLAT),LANOS Stufenheck (KLAT),NEXIA (KLETN),NEXIA Stufenheck (KLETN),OPEL KADETT D Caravan (35_, 36_, 45_, 46_),KADETT D (31_-34_, 41_-44_),KADETT E Cabriolet (43B_),KADETT E Caravan (35_, 36_, 45_, 46_),KADETT E CC (33_, 34_, 43_, 44_),KADETT E Combo (38_, 48_),KADETT E Kasten (37_, 47_),KADETT E (39_, 49_),VAUXHALL ASTRA Mk II Belmont,ASTRA Mk II CC,ASTRA Mk II Convertible,ASTRA Mk II Estate

49757 **Lenker, Radaufhängung, Track Control Arm, Bras de liaison, suspension de roue**

DAEWOO ESPERO (KLEJ),LANOS (KLAT),LANOS Stufenheck (KLAT),NEXIA (KLETN),NEXIA Stufenheck (KLETN),OPEL KADETT D Caravan (35_, 36_, 45_, 46_),KADETT D (31_-34_, 41_-44_),KADETT E Cabriolet (43B_),KADETT E Caravan (35_, 36_, 45_, 46_),KADETT E CC (33_, 34_, 43_, 44_),KADETT E Combo (38_, 48_),KADETT E Kasten (37_, 47_),KADETT E (39_, 49_),VAUXHALL ASTRA Mk II Belmont,ASTRA Mk II CC,ASTRA Mk II Convertible,ASTRA Mk II Estate

49758 **Spurstangenkopf, Tie Rod End, Rotule de barre de connexion**

OPEL OMEGA B Caravan (21_, 22_, 23_),OMEGA B (25_, 26_, 27_)

49759 **Spurstangenkopf, Tie Rod End, Rotule de barre de connexion**

OPEL OMEGA B Caravan (21_, 22_, 23_),OMEGA B (25_, 26_, 27_)

49760 **Spurstange, Rod Assembly, Barre de connexion**

OPEL OMEGA A Caravan (66_, 67_),OMEGA A (16_, 17_, 19_),SENATOR B (29_),VAUXHALL CARLTON Mk II,CARLTON Mk II Estate,CARLTON Mk III,CARLTON Mk III Estate,SENATOR Mk II

49761 **Spurstange, Rod Assembly, Barre de connexion**

AUDI CABRIOLET (8G7, B4),COUPE (81, 85),COUPE (89, 8B),80 Avant (8C, B4),80 (8C, B4),80 (81, 85, B2),80 (89, 89Q, 8A, B3),90 (81, 85, B2),90 (89, 89Q, 8A, B3),VW PASSAT Stufenheck (32B),PASSAT Variant (32B),PASSAT (32B),SANTANA (32B)

49762 **Spurstange, Rod Assembly, Barre de connexion**

AUDI COUPE (81, 85),80 (81, 85, B2),90 (81, 85, B2),VW PASSAT Stufenheck (32B),PASSAT Variant (32B),PASSAT (32B),SANTANA (32B)

49763 **Spurstange, Rod Assembly, Barre de connexion**

AUDI CABRIOLET (8G7, B4),COUPE (89, 8B),80 Avant (8C, B4),80 (8C, B4),80 (89, 89Q, 8A, B3),90 (89, 89Q, 8A, B3)

49764 **Axialgelenk, Spurstange, Inner Tie Rod, Rotule de direction intérieure, barre de connexion**

VW TRANSPORTER T4 Bus (70XB, 70XC, 7DB, 7DW),TRANSPORTER T4 Kasten (70XA),TRANSPORTER T4 Pritsche/Fahrgestell (70XD)

49766 **Spurstange, Rod Assembly, Barre de connexion**

VW TRANSPORTER T4 Bus (70XB, 70XC, 7DB, 7DW),TRANSPORTER T4 Kasten (70XA),TRANSPORTER T4 Pritsche/Fahrgestell (70XD)

49767 **Spurstange, Rod Assembly, Barre de connexion**

VW TRANSPORTER T4 Bus (70XB, 70XC, 7DB, 7DW),TRANSPORTER T4 Kasten (70XA),TRANSPORTER T4 Pritsche/Fahrgestell (70XD)

49768 **Lenker, Radaufhängung, Track Control Arm, Bras de liaison, suspension de roue**

AUDI COUPE (81, 85),COUPE (89, 8B),80 (8C, B4),80 (80, 82, B1),80 (81, 85, B2),80 (89, 89Q, 8A, B3),90 (81, 85, B2),90 (89, 89Q, 8A, B3),VW PASSAT Stufenheck (32B),PASSAT Variant (32B),PASSAT (32B),SANTANA (32B)

49769 **Lenker, Radaufhängung, Track Control Arm, Bras de liaison, suspension de roue**

AUDI COUPE (81, 85),COUPE (89, 8B),QUATTRO (85),80 (81, 85, B2),80 (89, 89Q, 8A, B3),90 (81, 85, B2),90 (89, 89Q, 8A, B3),VW PASSAT Stufenheck (32B),PASSAT Variant (32B),PASSAT (32B),SANTANA (32B)

49769/1 **Lenker, Radaufhängung, Track Control Arm, Bras de liaison, suspension de roue**

AUDI COUPE (89, 8B),80 (89, 89Q, 8A, B3),90 (89, 89Q, 8A, B3)

49770 **Lenker, Radaufhängung, Track Control Arm, Bras de liaison, suspension de roue**

AUDI CABRIOLET (8G7, B4),COUPE (81, 85),COUPE (89, 8B),QUATTRO (85),80 Avant (8C, B4),80 (8C, B4),80 (81, 85, B2),80 (89, 89Q, 8A, B3),90 (81, 85, B2),90 (89, 89Q, 8A, B3),VW PASSAT Stufenheck (32B),PASSAT Variant (32B),PASSAT (32B),SANTANA (32B)

49770/1 **Lenker, Radaufhängung, Track Control Arm, Bras de liaison, suspension de roue**

AUDI COUPE (89, 8B),80 (89, 89Q, 8A, B3),90 (89, 89Q, 8A, B3)

49773 **Spurstange, Rod Assembly, Barre de connexion**

VW TRANSPORTER T4 Bus (70XB, 70XC, 7DB, 7DW),TRANSPORTER T4 Kasten (70XA),TRANSPORTER T4 Pritsche/Fahrgestell (70XD)

49774 **Spurstange, Rod Assembly, Barre de connexion**

VW TRANSPORTER T4 Bus (70XB, 70XC, 7DB, 7DW),TRANSPORTER T4 Kasten (70XA),TRANSPORTER T4 Pritsche/Fahrgestell (70XD)

49775 **Lenker, Radaufhängung, Track Control Arm, Bras de liaison, suspension de roue**

AUDI COUPE (89, 8B),80 (89, 89Q, 8A, B3),90 (89, 89Q, 8A, B3)

49776 **Lenker, Radaufhängung, Track Control Arm, Bras de liaison, suspension de roue**

AUDI COUPE (89, 8B),80 (89, 89Q, 8A, B3),90 (89, 89Q, 8A, B3)

49777 **Stange/Strebe, Stabilisator, Link Stabiliser, Entretoise/tige, stabilisateur**

OPEL INSIGNIA,INSIGNIA Sports Tourer,INSIGNIA Stufenheck

49778 **Stange/Strebe, Stabilisator, Link Stabiliser, Entretoise/tige, stabilisateur**

OPEL INSIGNIA,INSIGNIA Sports Tourer,INSIGNIA Stufenheck,VAUXHALL INSIGNIA,INSIGNIA Estate,INSIGNIA Sedan

49779 **Stange/Strebe, Stabilisator, Link Stabiliser, Entretoise/tige, stabilisateur**

OPEL INSIGNIA,INSIGNIA Sports Tourer,INSIGNIA Stufenheck

49780 **Spurstange, Rod Assembly, Barre de connexion**

ALPINA B3 Cabriolet (E30),B3 (E30),B3 Kombi (E30),B6 (E30),C1 (E30),C2 Cabriolet (E30),C2 (E30),BMW 3 Cabriolet (E30),3 (E30),3 Touring (E30)

49781 **Spurstange, Rod Assembly, Barre de connexion**

ALPINA B3 Cabriolet (E30),B3 (E30),B3 Kombi (E30),B6 (E30),C1 (E30),C2 Cabriolet (E30),C2 (E30),BMW 3 Cabriolet (E30),3 (E30),3 Touring (E30)

49782 **Spurstange, Rod Assembly, Barre de connexion**

ALPINA B3 Cabriolet (E36),B3 Coupe (E36),B3 (E36),B3 Kombi (E36),B6 (E36),B7 Coupe (E24),B8 Cabriolet (E36),B8 Coupe (E36),B8 (E36),B8 Kombi (E36),B9 Coupe (E24),BMW Z3,Z3 Coupe,3 Cabriolet (E36),3 Compact (E36),3 Coupe (E36),3 (E36),3 Touring (E36)

49783 **Spurstange, Rod Assembly, Barre de connexion**

ALPINA B3 Cabriolet (E36),B3 Coupe (E36),B3 (E36),B3 Kombi (E36),B6 (E36),B7 Coupe (E24),B8 Cabriolet (E36),B8 Coupe (E36),B8 (E36),B8 Kombi (E36),B9 Coupe (E24),BMW Z3,Z3 Coupe,3 Cabriolet (E36),3 Compact (E36),3 Coupe (E36),3 (E36),3 Touring (E36)

49785 **Spurstange, Rod Assembly, Barre de connexion**

BMW Z3,Z3 Coupe,3 Cabriolet (E36),3 Compact (E36),3 Coupe (E36),3 (E36),3 Touring (E36)

49786 **Stange/Strebe, Stabilisator, Link Stabiliser, Entretoise/tige, stabilisateur**

ALPINA B6 (E36),BMW Z1,Z3,Z3 Coupe,3 Cabriolet (E30),3 Cabriolet (E36),3 Compact (E36),3 Coupe (E36),3 (E30),3 (E36),3 Touring (E30),3 Touring (E36),5 (E28),5 (E34),5 (E39),5 Touring (E34),5 Touring (E39),6 (E24),7 (E23),7 (E32)

49787 **Stange/Strebe, Stabilisator, Link Stabiliser, Entretoise/tige, stabilisateur**

BMW Z3,Z3 Coupe,3 Cabriolet (E36),3 Compact (E36),3 Coupe (E36),3 (E36),3 Touring (E36),5 (E34),5 Touring (E34),7 (E32)

49788 **Stange/Strebe, Stabilisator, Link Stabiliser, Entretoise/tige, stabilisateur**

ALPINA B10 (E34),B10 Kombi (E34),B11 (E32),B12 (E32),B7 Coupe (E24),B7 (E28),B9 Coupe (E24),B9 (E28),BMW 5 (E28),5 (E34),5 Touring (E34),6 (E24),7 (E23),7 (E32)

49789 **Spurstange, Rod Assembly, Barre de connexion**

AUDI A6 Avant (4A, C4),A6 (4A, C4),100 Avant (4A, C4),100 (4A, C4)

49790 **Spurstange, Rod Assembly, Barre de connexion**

AUDI A6 Avant (4A, C4),A6 Avant (4B, C5),A6 (4A, C4),100 Avant (4A, C4),100 (4A, C4)

49791OES **Lenker, Radaufhängung, Track Control Arm, Bras de liaison, suspension de roue**

AUDI ALLROAD (4BH),A4 Avant (8D5, B5),A4 Avant (8ED),A4 Avant (8E5, B6),A4 Cabriolet (8H7, 8HE),A4 (8D2, B5),A4 (8EC),A4 (8E2, B6),A6 Avant (4B, C5),A6 (4B, C5),A8 (4D2, 4D8),FAW-AUDI A4 Stufenheck (B7),A6 Stufenheck (C5),A6 Stufenheck (4A2, 4B2),SEAT EXEO ST (3R5),EXEO (3R2),SKODA SUPERB (3U4),SVW PASSAT Stufenheck,VW PASSAT Variant (3B5),PASSAT Variant (3B6),PASSAT (3B2),PASSAT (3B3)

49792OES **Lenker, Radaufhängung, Track Control Arm, Bras de liaison, suspension de roue**

AUDI ALLROAD (4BH),A4 Avant (8D5, B5),A4 Avant (8ED),A4 Avant (8E5, B6),A4 Cabriolet (8H7, 8HE),A4 (8D2, B5),A4 (8EC),A4 (8E2, B6),A6 Avant (4B, C5),A6 (4B, C5),A8 (4D2, 4D8),FAW-AUDI A4 Stufenheck (B6),A4 Stufenheck (B7),A4 Stufenheck (8D2),A6 Stufenheck (C5),A6 Stufenheck (4A2, 4B2),SEAT EXEO ST (3R5),EXEO (3R2),SKODA SUPERB (3U4),SVW PASSAT Stufenheck,VW PASSAT Variant (3B5),PASSAT Variant (3B6),PASSAT (3B2),PASSAT (3B3)

49793 **Stange/Strebe, Stabilisator, Link Stabiliser, Entretoise/tige, stabilisateur**

AUDI TT Roadster (8N9),TT (8N3)

49794 **Stange/Strebe, Stabilisator, Link Stabiliser, Entretoise/tige, stabilisateur**

AUDI TT Roadster (8N9),TT (8N3)

49795HPS **Stange/Strebe, Stabilisator, Link Stabiliser, Entretoise/tige, stabilisateur**

BMW Z8,7 (E38)

49796 **Stange/Strebe, Stabilisator, Link Stabiliser, Entretoise/tige, stabilisateur**

BMW 7 (E38)

49799 **Stange/Strebe, Stabilisator, Link Stabiliser, Entretoise/tige, stabilisateur**

BMW 3 Cabriolet (E46),3 Coupe (E46),3 (E46),3 Touring (E46)

49800 **Spurstangenkopf, Tie Rod End, Rotule de barre de connexion**

MERCEDES-BENZ C-KLASSE Kombi (S202),C-KLASSE (W202),CLK Cabriolet (A208),CLK (C208),SLK (R170)

49801 **Spurstange, Rod Assembly, Barre de connexion**

MERCEDES-BENZ C-KLASSE Kombi (S202),C-KLASSE (W202),CLK Cabriolet (A208),CLK (C208)

49802 **Trag-/Führungsgelenk, Ball Joint, Rotule de suspension**

MERCEDES-BENZ C-KLASSE Kombi (S202),C-KLASSE (W202),CLK Cabriolet (A208),CLK (C208),E-KLASSE Cabriolet (A124),E-KLASSE Kombi (S210),E-KLASSE (W210),SLK (R170)

49803	**Lenker, Radaufhängung, Track Control Arm, Bras de liaison, suspension de roue**
	MERCEDES-BENZ C-KLASSE Kombi (S202),C-KLASSE (W202),CLK Cabriolet (A208),CLK (C208),E-KLASSE Kombi (S210),E-KLASSE (W210),SLK (R170)
49804	**Lenker, Radaufhängung, Track Control Arm, Bras de liaison, suspension de roue**
	MERCEDES-BENZ C-KLASSE Kombi (S202),C-KLASSE (W202),CLK Cabriolet (A208),CLK (C208),E-KLASSE Kombi (S210),E-KLASSE (W210),SLK (R170)
49805	**Spurstangenkopf, Tie Rod End, Rotule de barre de connexion**
	MERCEDES-BENZ E-KLASSE Kombi (S210),E-KLASSE (W210)
49806	**Spurstangenkopf, Tie Rod End, Rotule de barre de connexion**
	MERCEDES-BENZ E-KLASSE Kombi (S210),E-KLASSE (W210)
49807	**Axialgelenk, Spurstange, Inner Tie Rod, Rotule de direction intérieure, barre de connexion**
	MERCEDES-BENZ E-KLASSE Kombi (S210),E-KLASSE (W210)
49808	**Lenker, Radaufhängung, Track Control Arm, Bras de liaison, suspension de roue**
	MERCEDES-BENZ E-KLASSE Kombi (S210),E-KLASSE (W210)
49809	**Lenker, Radaufhängung, Track Control Arm, Bras de liaison, suspension de roue**
	MERCEDES-BENZ E-KLASSE Kombi (S210),E-KLASSE (W210)
49811HPS	**Stange/Strebe, Stabilisator, Link Stabiliser, Entretoise/tige, stabilisateur**
	MERCEDES-BENZ E-KLASSE Kombi (S210),E-KLASSE (W210)
49812HPS	**Stange/Strebe, Stabilisator, Link Stabiliser, Entretoise/tige, stabilisateur**
	MERCEDES-BENZ E-KLASSE Kombi (S210),E-KLASSE (W210)
49813	**Spurstange, Rod Assembly, Barre de connexion**
	MERCEDES-BENZ CABRIOLET (A124),COUPE (C124),E-KLASSE Cabriolet (A124),E-KLASSE Coupe (C124),E-KLASSE Kombi (S124),E-KLASSE (W124),KOMBI Kombi (S124),Stufenheck (W124)
49814/1	**Lenker, Radaufhängung, Track Control Arm, Bras de liaison, suspension de roue**
	MERCEDES-BENZ A-KLASSE (W168)
49814/2	**Lenker, Radaufhängung, Track Control Arm, Bras de liaison, suspension de roue**
	MERCEDES-BENZ A-KLASSE (W168)
49815	**Lenker, Radaufhängung, Track Control Arm, Bras de liaison, suspension de roue**
	MERCEDES-BENZ CABRIOLET (A124),COUPE (C124),E-KLASSE Coupe (C124),E-KLASSE Kombi (S124),E-KLASSE (W124),KOMBI Kombi (S124),Stufenheck (W124),190 (W201)
49816	**Lenker, Radaufhängung, Track Control Arm, Bras de liaison, suspension de roue**
	MERCEDES-BENZ CABRIOLET (A124),COUPE (C124),E-KLASSE Coupe (C124),E-KLASSE Kombi (S124),E-KLASSE (W124),KOMBI Kombi (S124),Stufenheck (W124),190 (W201)
49817	**Lenker, Radaufhängung, Track Control Arm, Bras de liaison, suspension de roue**
	MERCEDES-BENZ CABRIOLET (A124),COUPE (C124),E-KLASSE Cabriolet (A124),E-KLASSE Coupe (C124),E-KLASSE Kombi (S124),E-KLASSE (W124),KOMBI Kombi (S123),KOMBI Kombi (S124),SL (R129),Stufenheck (W124),190 (W201)
49818	**Lenker, Radaufhängung, Track Control Arm, Bras de liaison, suspension de roue**
	MERCEDES-BENZ CABRIOLET (A124),COUPE (C124),E-KLASSE Cabriolet (A124),E-KLASSE Coupe (C124),E-KLASSE Kombi (S124),E-KLASSE (W124),KOMBI Kombi (S123),KOMBI Kombi (S124),SL (R129),Stufenheck (W124),190 (W201)
49819	**Lenker, Radaufhängung, Track Control Arm, Bras de liaison, suspension de roue**
	MERCEDES-BENZ S-KLASSE Coupe (C140),S-KLASSE (W140)
49820	**Lenker, Radaufhängung, Track Control Arm, Bras de liaison, suspension de roue**
	MERCEDES-BENZ S-KLASSE Coupe (C140),S-KLASSE (W140)
49821	**Lenker, Radaufhängung, Track Control Arm, Bras de liaison, suspension de roue**
	MERCEDES-BENZ C-KLASSE Kombi (S202),C-KLASSE (W202),C-KLASSE (W203),E-KLASSE Kombi (S210),E-KLASSE (W210),SLK (R170)
49822	**Lenker, Radaufhängung, Track Control Arm, Bras de liaison, suspension de roue**
	MERCEDES-BENZ C-KLASSE Kombi (S202),C-KLASSE (W202),C-KLASSE (W203),SLK (R170)
49823	**Spurstangenkopf, Tie Rod End, Rotule de barre de connexion**
	MERCEDES-BENZ A-KLASSE (W168)
49824	**Spurstangenkopf, Tie Rod End, Rotule de barre de connexion**
	MERCEDES-BENZ A-KLASSE (W168)
49825	**Trag-/Führungsgelenk, Ball Joint, Rotule de suspension**
	MERCEDES-BENZ A-KLASSE (W168)
49826	**Stange/Strebe, Stabilisator, Link Stabiliser, Entretoise/tige, stabilisateur**
	MERCEDES-BENZ S-KLASSE Coupe (C140),S-KLASSE (W140)
49827	**Stange/Strebe, Stabilisator, Link Stabiliser, Entretoise/tige, stabilisateur**
	MERCEDES-BENZ S-KLASSE Coupe (C140),S-KLASSE (W140)
49828	**Lenker, Radaufhängung, Track Control Arm, Bras de liaison, suspension de roue**
	MERCEDES-BENZ CABRIOLET (A124),COUPE (C124),E-KLASSE Coupe (C124),E-KLASSE Kombi (S124),E-KLASSE (W124),KOMBI Kombi (S124),SL (R129),Stufenheck (W124)
49829	**Lenker, Radaufhängung, Track Control Arm, Bras de liaison, suspension de roue**
	MERCEDES-BENZ CABRIOLET (A124),COUPE (C124),E-KLASSE Coupe (C124),E-KLASSE Kombi (S124),E-KLASSE (W124),KOMBI Kombi (S124),SL (R129),Stufenheck (W124)

49830 — **Spurstangenkopf, Tie Rod End, Rotule de barre de connexion**

MERCEDES-BENZ SPRINTER 2-t Bus (901, 902),SPRINTER 2-t Kasten (901, 902),SPRINTER 2-t Pritsche/Fahrgestell (901, 902),SPRINTER 3-t Bus (903),SPRINTER 3-t Kasten (903),SPRINTER 3-t Pritsche/Fahrgestell (903),SPRINTER 4-t Bus (904),SPRINTER 4-t Kasten (904),SPRINTER 4-t Pritsche/Fahrgestell (904),VW LT 28-35 II Bus (2DM),LT 28-46 II Kasten (2DX0AE),LT 28-46 II Pritsche/Fahrgestell (2DX0FE)

49831 — **Trag-/Führungsgelenk, Ball Joint, Rotule de suspension**

MERCEDES-BENZ SPRINTER 2-t Bus (901, 902),SPRINTER 2-t Kasten (901, 902),SPRINTER 2-t Pritsche/Fahrgestell (901, 902),SPRINTER 3-t Bus (903),SPRINTER 3-t Kasten (903),SPRINTER 3-t Pritsche/Fahrgestell (903),SPRINTER 4-t Bus (904),SPRINTER 4-t Kasten (904),SPRINTER 4-t Pritsche/Fahrgestell (904),VW LT 28-35 II Bus (2DM),LT 28-46 II Kasten (2DX0AE),LT 28-46 II Pritsche/Fahrgestell (2DX0FE)

49833 — **Axialgelenk, Spurstange, Inner Tie Rod, Rotule de direction intérieure, barre de connexion**

MERCEDES-BENZ SPRINTER 2-t Bus (901, 902),SPRINTER 2-t Kasten (901, 902),SPRINTER 2-t Pritsche/Fahrgestell (901, 902),SPRINTER 3-t Bus (903),SPRINTER 3-t Kasten (903),SPRINTER 3-t Pritsche/Fahrgestell (903),SPRINTER 4-t Bus (904),SPRINTER 4-t Kasten (904),SPRINTER 4-t Pritsche/Fahrgestell (904),VW LT 28-35 II Bus (2DM),LT 28-46 II Kasten (2DX0AE),LT 28-46 II Pritsche/Fahrgestell (2DX0FE)

49834HPS — **Stange/Strebe, Stabilisator, Link Stabiliser, Entretoise/tige, stabilisateur**

MERCEDES-BENZ A-KLASSE (W168)

49836 — **Spurstangenkopf, Tie Rod End, Rotule de barre de connexion**

MERCEDES-BENZ VITO Bus (638),VITO Kasten (638),V-KLASSE (638/2)

49837 — **Axialgelenk, Spurstange, Inner Tie Rod, Rotule de direction intérieure, barre de connexion**

MERCEDES-BENZ VITO Bus (638),VITO Kasten (638),V-KLASSE (638/2)

49838 — **Spurstange, Rod Assembly, Barre de connexion**

MERCEDES-BENZ VITO Bus (638),VITO Kasten (638)

49839 — **Trag-/Führungsgelenk, Ball Joint, Rotule de suspension**

MERCEDES-BENZ VITO Bus (638),VITO Kasten (638)

49840HPS — **Stange/Strebe, Stabilisator, Link Stabiliser, Entretoise/tige, stabilisateur**

MERCEDES-BENZ VITO Bus (638),VITO Kasten (638),V-KLASSE (638/2)

49841HPS — **Stange/Strebe, Stabilisator, Link Stabiliser, Entretoise/tige, stabilisateur**

MERCEDES-BENZ VITO Bus (638),VITO Kasten (638),V-KLASSE (638/2)

49843 — **Stange/Strebe, Stabilisator, Link Stabiliser, Entretoise/tige, stabilisateur**

MERCEDES-BENZ VITO Bus (638),VITO Kasten (638),V-KLASSE (638/2)

49844 — **Lenkstange, Centre Rod Assembly, Barre de direction**

MERCEDES-BENZ T1 Kasten (601),T1 Kasten (602),T1 Pritsche/Fahrgestell (601),T1 Pritsche/Fahrgestell (602),T2/L

49845 — **Lenkstange, Centre Rod Assembly, Barre de direction**

MERCEDES-BENZ T1 Kasten (601),T1 Pritsche/Fahrgestell (601),T1/TN

49846 — **Spurstange, Rod Assembly, Barre de connexion**

MERCEDES-BENZ T1 Kasten (601),T1 Kasten (602),T1 Pritsche/Fahrgestell (601),T1 Pritsche/Fahrgestell (602)

49847 — **Spurstangenkopf, Tie Rod End, Rotule de barre de connexion**

MERCEDES-BENZ T1 Kasten (601),T1 Kasten (602),T1 Pritsche/Fahrgestell (601),T1 Pritsche/Fahrgestell (602),T1/TN

49848 — **Spurstangenkopf, Tie Rod End, Rotule de barre de connexion**

MERCEDES-BENZ T1 Kasten (601),T1 Kasten (602),T1 Pritsche/Fahrgestell (601),T1 Pritsche/Fahrgestell (602),T1/TN

49849 — **Spurstangenkopf, Tie Rod End, Rotule de barre de connexion**

MERCEDES-BENZ T1 Kasten (601),T1 Pritsche/Fahrgestell (601)

49850 — **Stange/Strebe, Stabilisator, Link Stabiliser, Entretoise/tige, stabilisateur**

SEAT CORDOBA Vario (6K5),CORDOBA (6K2/C2),IBIZA II (6K1),TOLEDO I (1L),VW CORRADO (53I),GOLF I Cabriolet (155),GOLF I (17),GOLF II (19E, 1G1),GOLF III Cabriolet (1E7),GOLF III Variant (1H5),GOLF III (1H1),GOLF IV Cabriolet (1E7),JETTA I (16),JETTA II (19E, 1G2),VENTO (1H2)

49851 — **Stange/Strebe, Stabilisator, Link Stabiliser, Entretoise/tige, stabilisateur**

VW TRANSPORTER T4 Bus (70XB, 70XC, 7DB, 7DW),TRANSPORTER T4 Kasten (70XA),TRANSPORTER T4 Pritsche/Fahrgestell (70XD)

49852 — **Lenker, Radaufhängung, Track Control Arm, Bras de liaison, suspension de roue**

VW TRANSPORTER T4 Bus (70XB, 70XC, 7DB, 7DW),TRANSPORTER T4 Kasten (70XA),TRANSPORTER T4 Pritsche/Fahrgestell (70XD)

49853 — **Lenker, Radaufhängung, Track Control Arm, Bras de liaison, suspension de roue**

VW TRANSPORTER T4 Bus (70XB, 70XC, 7DB, 7DW),TRANSPORTER T4 Kasten (70XA),TRANSPORTER T4 Pritsche/Fahrgestell (70XD)

49854 — **Lenker, Radaufhängung, Track Control Arm, Bras de liaison, suspension de roue**

VW TRANSPORTER T4 Bus (70XB, 70XC, 7DB, 7DW),TRANSPORTER T4 Kasten (70XA),TRANSPORTER T4 Pritsche/Fahrgestell (70XD)

49855 — **Lenker, Radaufhängung, Track Control Arm, Bras de liaison, suspension de roue**

VW TRANSPORTER T4 Bus (70XB, 70XC, 7DB, 7DW),TRANSPORTER T4 Kasten (70XA),TRANSPORTER T4 Pritsche/Fahrgestell (70XD)

49856HPS — **Stange/Strebe, Stabilisator, Link Stabiliser, Entretoise/tige, stabilisateur**

FORD GALAXY (WGR),SEAT ALHAMBRA (7V8, 7V9),VW SHARAN (7M8, 7M9, 7M6)

49857 — **Spurstangenkopf, Tie Rod End, Rotule de barre de connexion**

FORD GALAXY (WGR),SEAT ALHAMBRA (7V8, 7V9),VW SHARAN (7M8, 7M9, 7M6)

49858 — **Spurstangenkopf, Tie Rod End, Rotule de barre de connexion**

FORD GALAXY (WGR),SEAT ALHAMBRA (7V8, 7V9),VW SHARAN (7M8, 7M9, 7M6)

49859 — **Trag-/Führungsgelenk, Ball Joint, Rotule de suspension**

VW TRANSPORTER T4 Bus (70XB, 70XC, 7DB, 7DW),TRANSPORTER T4 Kasten (70XA),TRANSPORTER T4 Pritsche/Fahrgestell (70XD)

49860 **Stange/Strebe, Stabilisator, Link Stabiliser, Entretoise/tige, stabilisateur**

VW PASSAT Variant (3A5, 35I),PASSAT (3A2, 35I)

49860/1 **Stange/Strebe, Stabilisator, Link Stabiliser, Entretoise/tige, stabilisateur**

VW PASSAT Variant (3A5, 35I),PASSAT (3A2, 35I)

49860/9 **Lagerung, Stabilisator, Anti-roll Bar Bush Kit, Suspension, stabilisateur**

VW PASSAT Variant (3A5, 35I),PASSAT (3A2, 35I)

49861 **Trag-/Führungsgelenk, Ball Joint, Rotule de suspension**

FORD GALAXY (WGR),SEAT ALHAMBRA (7V8, 7V9),VW SHARAN (7M8, 7M9, 7M6)

49862 **Stange/Strebe, Stabilisator, Link Stabiliser, Entretoise/tige, stabilisateur**

SEAT AROSA (6H),VW LUPO (6X1, 6E1),POLO Kasten (6NF),POLO (6N1),POLO (6N2)

49862/1 **Stange/Strebe, Stabilisator, Link Stabiliser, Entretoise/tige, stabilisateur**

SEAT AROSA (6H),VW LUPO (6X1, 6E1),POLO Kasten (6NF),POLO (6N1),POLO (6N2)

49862/9 **Lagerung, Stabilisator, Anti-roll Bar Bush Kit, Suspension, stabilisateur**

SEAT AROSA (6H),CORDOBA Schrägheck (6K2),CORDOBA Vario (6K5),CORDOBA (6K2/C2),IBIZA II (6K1),IBIZA III (6K1),INCA (6K9),TOLEDO I (1L),VW CADDY II Kasten (9K9A),CADDY II Kombi (9K9B),CADDY II Pick-up (9U7),CORRADO (53I),GOLF II (19E, 1G1),GOLF III Cabriolet (1E7),GOLF III Variant (1H5),GOLF III (1H1),GOLF IV Cabriolet (1E7),JETTA II (19E, 1G2),LUPO (6X1, 6E1),PASSAT Variant (3A5, 35I),PASSAT (3A2, 35I),POLO CLASSIC (6KV2),POLO Coupe (86C, 80),POLO Kasten (6NF),POLO Variant (6KV5),POLO (6N1),POLO (6N2),POLO (9N_),VENTO (1H2)

49863 **Stange/Strebe, Stabilisator, Link Stabiliser, Entretoise/tige, stabilisateur**

VW TRANSPORTER T4 Bus (70XB, 70XC, 7DB, 7DW),TRANSPORTER T4 Kasten (70XA),TRANSPORTER T4 Pritsche/Fahrgestell (70XD)

49865 **Stange/Strebe, Stabilisator, Link Stabiliser, Entretoise/tige, stabilisateur**

VW PASSAT (3A2, 35I)

49865/1 **Stange/Strebe, Stabilisator, Link Stabiliser, Entretoise/tige, stabilisateur**

VW PASSAT (3A2, 35I)

49866 **Axialgelenk, Spurstange, Inner Tie Rod, Rotule de direction intérieure, barre de connexion**

FORD GALAXY (WGR),SEAT ALHAMBRA (7V8, 7V9),VW SHARAN (7M8, 7M9, 7M6)

49866/1 **Spurstange, Rod Assembly, Barre de connexion**

FORD GALAXY (WGR),SEAT ALHAMBRA (7V8, 7V9),VW SHARAN (7M8, 7M9, 7M6)

49866/2 **Spurstange, Rod Assembly, Barre de connexion**

FORD GALAXY (WGR),SEAT ALHAMBRA (7V8, 7V9),VW SHARAN (7M8, 7M9, 7M6)

49867 **Stange/Strebe, Stabilisator, Link Stabiliser, Entretoise/tige, stabilisateur**

AUDI A3 (8L1),SKODA OCTAVIA Combi (1U5),OCTAVIA (1U2),VW BORA Kombi (1J6),BORA (1J2),GOLF IV Variant (1J5),GOLF IV (1J1),NEW BEETLE Cabriolet (1Y7),NEW BEETLE (9C1, 1C1)

49868 **Stange/Strebe, Stabilisator, Link Stabiliser, Entretoise/tige, stabilisateur**

AUDI A3 (8L1),SEAT LEON (1M1),TOLEDO II (1M2),SKODA OCTAVIA Combi (1U5),OCTAVIA (1U2),VW BORA Kombi (1J6),BORA (1J2),GOLF IV Cabriolet (1E7),GOLF IV Variant (1J5),GOLF IV (1J1),NEW BEETLE Cabriolet (1Y7),NEW BEETLE (9C1, 1C1)

49869 **Spurstange, Rod Assembly, Barre de connexion**

AUDI A3 (8L1),SKODA OCTAVIA (1U2),VW GOLF III Variant (1H5),GOLF III (1H1),GOLF IV Variant (1J5),GOLF IV (1J1),NEW BEETLE (9C1, 1C1),VENTO (1H2)

49870 **Spurstange, Rod Assembly, Barre de connexion**

AUDI A3 (8L1),SKODA OCTAVIA (1U2),VW GOLF III Variant (1H5),GOLF III (1H1),GOLF IV Variant (1J5),GOLF IV (1J1),NEW BEETLE (9C1, 1C1),VENTO (1H2)

49871 **Spurstangenkopf, Tie Rod End, Rotule de barre de connexion**

SEAT AROSA (6H),VW LUPO (6X1, 6E1),POLO Kasten (6NF),POLO (6N1),POLO (6N2)

49872 **Spurstangenkopf, Tie Rod End, Rotule de barre de connexion**

SEAT AROSA (6H),VW POLO (6N1),POLO (6N2)

49873 **Spurstange, Rod Assembly, Barre de connexion**

SEAT TOLEDO I (1L),VW CORRADO (53I),GOLF III (1H1),VENTO (1H2)

49874 **Spurstange, Rod Assembly, Barre de connexion**

SEAT TOLEDO I (1L),VW CORRADO (53I),GOLF III (1H1),VENTO (1H2)

49876 **Lenker, Radaufhängung, Track Control Arm, Bras de liaison, suspension de roue**

FORD GALAXY (WGR),SEAT ALHAMBRA (7V8, 7V9),VW SHARAN (7M8, 7M9, 7M6)

49877 **Lenker, Radaufhängung, Track Control Arm, Bras de liaison, suspension de roue**

FORD GALAXY (WGR),SEAT ALHAMBRA (7V8, 7V9),VW SHARAN (7M8, 7M9, 7M6)

49878 **Spurstange, Rod Assembly, Barre de connexion**

VW DERBY (86C, 80),POLO (86C, 80)

49880 **Spurstangenkopf, Tie Rod End, Rotule de barre de connexion**

MERCEDES-BENZ T1 Kasten (601),T1 Pritsche/Fahrgestell (601)

49881 **Spurstangenkopf, Tie Rod End, Rotule de barre de connexion**

MERCEDES-BENZ O 100,100 Bus (631),100 Kasten (631),100 Pritsche/Fahrgestell (631)

49882 **Spurstangenkopf, Tie Rod End, Rotule de barre de connexion**

MERCEDES-BENZ 100 Bus (631),100 Kasten (631),100 Pritsche/Fahrgestell (631)

49883	**Spurstangenkopf, Tie Rod End, Rotule de barre de connexion**
	MERCEDES-BENZ 100 Bus (631),100 Kasten (631),100 Pritsche/Fahrgestell (631)
49884	**Spurstangenkopf, Tie Rod End, Rotule de barre de connexion**
	MERCEDES-BENZ 100 Bus (631),100 Kasten (631),100 Pritsche/Fahrgestell (631)
49886	**Spurstange, Rod Assembly, Barre de connexion**
	MERCEDES-BENZ O 100,100 Bus (631),100 Kasten (631),100 Pritsche/Fahrgestell (631)
49888	**Stange/Strebe, Radaufhängung, Link, wheel suspension, Biellette de barre stabilisatrice**
	MERCEDES-BENZ S-KLASSE Coupe (C140),S-KLASSE (W140)
49889	**Stange/Strebe, Radaufhängung, Link, wheel suspension, Biellette de barre stabilisatrice**
	MERCEDES-BENZ S-KLASSE Coupe (C140),S-KLASSE (W140)
49890	**Stange/Strebe, Radaufhängung, Link, wheel suspension, Biellette de barre stabilisatrice**
	MERCEDES-BENZ S-KLASSE Coupe (C140),S-KLASSE (W140)
49891	**Trag-/Führungsgelenk, Ball Joint, Rotule de suspension**
	MERCEDES-BENZ S-KLASSE Coupe (C140),S-KLASSE (W140)
49892	**Spurstange, Rod Assembly, Barre de connexion**
	MERCEDES-BENZ S-KLASSE Coupe (C140),S-KLASSE (W140)
49893	**Stange/Strebe, Radaufhängung, Link, wheel suspension, Biellette de barre stabilisatrice**
	MERCEDES-BENZ S-KLASSE Coupe (C140),S-KLASSE (W140)
49894	**Axialgelenk, Spurstange, Inner Tie Rod, Rotule de direction intérieure, barre de connexion**
	MERCEDES-BENZ A-KLASSE (W168),VANEO (414)
49895	**Stange/Strebe, Stabilisator, Link Stabiliser, Entretoise/tige, stabilisateur**
	MERCEDES-BENZ C-KLASSE Kombi (S203),C-KLASSE Sportcoupe (CL203),C-KLASSE (W203),CLK (C209)
49895HPS	**Stange/Strebe, Stabilisator, Link Stabiliser, Entretoise/tige, stabilisateur**
	MERCEDES-BENZ C-KLASSE Kombi (S203),C-KLASSE Sportcoupe (CL203),C-KLASSE (W203),CLK Cabriolet (A209),CLK (C209)
49896	**Lenker, Radaufhängung, Track Control Arm, Bras de liaison, suspension de roue**
	MERCEDES-BENZ S-KLASSE Coupe (C126),S-KLASSE (W126)
49897	**Lenker, Radaufhängung, Track Control Arm, Bras de liaison, suspension de roue**
	MERCEDES-BENZ S-KLASSE Coupe (C126),S-KLASSE (W126)
49898	**Spurstange, Rod Assembly, Barre de connexion**
	MERCEDES-BENZ S-KLASSE Coupe (C126),S-KLASSE (W116),S-KLASSE (W126)
49899	**Spurstange, Rod Assembly, Barre de connexion**
	MERCEDES-BENZ S-KLASSE Coupe (C126),S-KLASSE (W116),S-KLASSE (W126)
49900	**Axialgelenk, Spurstange, Inner Tie Rod, Rotule de direction intérieure, barre de connexion**
	VOLVO S90,V90 Kombi,740 Kombi (745),740 (744),760 Kombi (704, 765),760 (704, 764),780,940 II Kombi (945),940 II (944),940 Kombi (945),940 (944),960 II Kombi (965),960 II (964),960 Kombi (965),960 (964)
49901HPS	**Stange/Strebe, Stabilisator, Link Stabiliser, Entretoise/tige, stabilisateur**
	VOLVO 440 K (445),460 L (464),480 E
49902HPS	**Stange/Strebe, Stabilisator, Link Stabiliser, Entretoise/tige, stabilisateur**
	VOLVO 440 K (445),460 L (464),480 E
49903	**Lenker, Radaufhängung, Track Control Arm, Bras de liaison, suspension de roue**
	ROVER 100 Cabriolet (XP),100 (METRO) (XP)
49904	**Lenker, Radaufhängung, Track Control Arm, Bras de liaison, suspension de roue**
	ROVER 100 Cabriolet (XP),100 (METRO) (XP)
49905HPS	**Stange/Strebe, Stabilisator, Link Stabiliser, Entretoise/tige, stabilisateur**
	MITSUBISHI CARISMA (DA_),CARISMA Stufenheck (DA_),VOLVO S40 I (VS),V40 Kombi (VW)
49906HPS	**Stange/Strebe, Stabilisator, Link Stabiliser, Entretoise/tige, stabilisateur**
	VOLVO S60,S80 (TS, XY),V70 II Kombi (P80_),XC 90,XC70 CROSS COUNTRY
49907	**Lenker, Radaufhängung, Track Control Arm, Bras de liaison, suspension de roue**
	VOLVO S40 I (VS),V40 Kombi (VW)
49908	**Lenker, Radaufhängung, Track Control Arm, Bras de liaison, suspension de roue**
	VOLVO S40 I (VS),V40 Kombi (VW)
49909	**Stange/Strebe, Stabilisator, Link Stabiliser, Entretoise/tige, stabilisateur**
	VOLVO S40 I (VS),V40 Kombi (VW)
49910	**Axialgelenk, Spurstange, Inner Tie Rod, Rotule de direction intérieure, barre de connexion**
	VOLVO S40 I (VS),V40 Kombi (VW)
49911	**Axialgelenk, Spurstange, Inner Tie Rod, Rotule de direction intérieure, barre de connexion**
	HONDA CONCERTO (HW),ROVER 200 Coupe (XW),200 Hatchback (XW),200 (RF),400 Tourer (XW),400 (XW)
49912	**Lenker, Radaufhängung, Track Control Arm, Bras de liaison, suspension de roue**
	VOLVO S70 (P80_),V70 I Kombi (P80_),850 Kombi (LW),850 (LS)

49913	**Lenker, Radaufhängung, Track Control Arm, Bras de liaison, suspension de roue**
	VOLVO S70 (P80_),V70 I Kombi (P80_),850 Kombi (LW),850 (LS)
49914	**Lenker, Radaufhängung, Track Control Arm, Bras de liaison, suspension de roue**
	VOLVO S70 (P80_),V70 I Kombi (P80_),850 Kombi (LW),850 (LS)
49915	**Lenker, Radaufhängung, Track Control Arm, Bras de liaison, suspension de roue**
	VOLVO S70 (P80_),V70 I Kombi (P80_),850 Kombi (LW),850 (LS)
49916HPS	**Stange/Strebe, Stabilisator, Link Stabiliser, Entretoise/tige, stabilisateur**
	VOLVO S60,S80 (TS, XY),V70 II Kombi (P80_)
49917	**Axialgelenk, Spurstange, Inner Tie Rod, Rotule de direction intérieure, barre de connexion**
	VOLVO C70 I Cabriolet,C70 I Coupe,S60,S70 (P80_),850 Kombi (LW),850 (LS)
49918	**Axialgelenk, Spurstange, Inner Tie Rod, Rotule de direction intérieure, barre de connexion**
	VOLVO S90,V90 Kombi,940 II Kombi (945),940 II (944),960 II Kombi (965),960 II (964)
49919	**Lenker, Radaufhängung, Track Control Arm, Bras de liaison, suspension de roue**
	VOLVO S40 I (VS),V40 Kombi (VW)
49920	**Lenker, Radaufhängung, Track Control Arm, Bras de liaison, suspension de roue**
	VOLVO S40 I (VS),V40 Kombi (VW)
49921	**Spurstangenkopf, Tie Rod End, Rotule de barre de connexion**
	VOLVO S60,S80 (TS, XY)
49922	**Spurstangenkopf, Tie Rod End, Rotule de barre de connexion**
	VOLVO S60,S80 (TS, XY)
49923	**Axialgelenk, Spurstange, Inner Tie Rod, Rotule de direction intérieure, barre de connexion**
	VOLVO S60,S80 (TS, XY)
49924	**Trag-/Führungsgelenk, Ball Joint, Rotule de suspension**
	VOLVO S60,S80 (TS, XY),V70 II Kombi (P80_),XC70 CROSS COUNTRY
49925	**Lenker, Radaufhängung, Track Control Arm, Bras de liaison, suspension de roue**
	VOLVO 440 K (445),460 L (464),480 E
49926	**Lenker, Radaufhängung, Track Control Arm, Bras de liaison, suspension de roue**
	VOLVO 440 K (445),460 L (464),480 E
49927	**Axialgelenk, Spurstange, Inner Tie Rod, Rotule de direction intérieure, barre de connexion**
	VOLVO S60,S80 (TS, XY),V70 II Kombi (P80_),XC70 CROSS COUNTRY
49928	**Axialgelenk, Spurstange, Inner Tie Rod, Rotule de direction intérieure, barre de connexion**
	VOLVO 440 K (445),460 L (464)
49930	**Lenker, Radaufhängung, Track Control Arm, Bras de liaison, suspension de roue**
	CHRYSLER NEON II
49931	**Lenker, Radaufhängung, Track Control Arm, Bras de liaison, suspension de roue**
	CHRYSLER NEON II
49932	**Stange/Strebe, Radaufhängung, Link, wheel suspension, Biellette de barre stabilisatrice**
	JEEP CHEROKEE (XJ),GRAND CHEROKEE I (Z)
49933	**Stange/Strebe, Radaufhängung, Link, wheel suspension, Biellette de barre stabilisatrice**
	JEEP CHEROKEE (XJ),GRAND CHEROKEE I (Z)
49934	**Stange/Strebe, Radaufhängung, Link, wheel suspension, Biellette de barre stabilisatrice**
	JEEP GRAND CHEROKEE I (Z),WRANGLER II (TJ)
49935	**Stange/Strebe, Radaufhängung, Link, wheel suspension, Biellette de barre stabilisatrice**
	JEEP GRAND CHEROKEE I (Z)
49936	**Lenker, Radaufhängung, Track Control Arm, Bras de liaison, suspension de roue**
	CHRYSLER NEON (PL)
49937	**Lenker, Radaufhängung, Track Control Arm, Bras de liaison, suspension de roue**
	CHRYSLER NEON (PL)
49938HPS	**Stange/Strebe, Stabilisator, Link Stabiliser, Entretoise/tige, stabilisateur**
	CHRYSLER VOYAGER II (GS),VOYAGER III,DODGE CARAVAN II,CARAVAN III (RG_)
49940	**Lenker, Radaufhängung, Track Control Arm, Bras de liaison, suspension de roue**
	HYUNDAI H100 Bus (P),H100 Kasten,MITSUBISHI L 300 Bus (LO3_P/G, L0_2P),L 300 Bus (P0_W, P1_W, P2_W),L 300 Kasten (P0_W, P1_W)
49941	**Lenker, Radaufhängung, Track Control Arm, Bras de liaison, suspension de roue**
	HYUNDAI H100 Bus (P),H100 Kasten,MITSUBISHI L 300 Bus (LO3_P/G, L0_2P),L 300 Bus (P0_W, P1_W, P2_W),L 300 Kasten (P0_W, P1_W)
49942	**Axialgelenk, Spurstange, Inner Tie Rod, Rotule de direction intérieure, barre de connexion**
	VOLVO S90,V90 Kombi,740 Kombi (745),740 (744),760 Kombi (704, 765),760 (704, 764),940 II Kombi (945),940 II (944),940 Kombi (945),940 (944),960 II Kombi (965),960 II (964),960 Kombi (965),960 (964)
49943	**Axialgelenk, Spurstange, Inner Tie Rod, Rotule de direction intérieure, barre de connexion**
	VOLVO 740 Kombi (745),740 (744),760 Kombi (704, 765),760 (704, 764),940 Kombi (945),940 (944),960 Kombi (965),960 (964)

49944	**Axialgelenk, Spurstange, Inner Tie Rod, Rotule de direction intérieure, barre de connexion**
	VOLVO 440 K (445),460 L (464),480 E
49947	**Stange/Strebe, Stabilisator, Link Stabiliser, Entretoise/tige, stabilisateur**
	VOLVO S40 I (VS),V40 Kombi (VW)
49947HPS	**Stange/Strebe, Stabilisator, Link Stabiliser, Entretoise/tige, stabilisateur**
	VOLVO S40 I (VS),V40 Kombi (VW)
49950	**Lenker, Radaufhängung, Track Control Arm, Bras de liaison, suspension de roue**
	LEXUS GS (JZS160)
49951	**Lenker, Radaufhängung, Track Control Arm, Bras de liaison, suspension de roue**
	LEXUS GS (JZS160)
49952	**Axialgelenk, Spurstange, Inner Tie Rod, Rotule de direction intérieure, barre de connexion**
	VOLVO 240 Kombi (P245),240 (P242, P244),260 Kombi (P265),260 (P262, P264)
49954	**Axialgelenk, Spurstange, Inner Tie Rod, Rotule de direction intérieure, barre de connexion**
	VOLVO S70 (P80_),V70 I Kombi (P80_),850 Kombi (LW),850 (LS)
49955	**Trag-/Führungsgelenk, Ball Joint, Rotule de suspension**
	VOLVO XC 90
49956	**Stange/Strebe, Radaufhängung, Link, wheel suspension, Biellette de barre stabilisatrice**
	VOLVO S40 I (VS),V40 Kombi (VW)
49958	**Lenker, Radaufhängung, Track Control Arm, Bras de liaison, suspension de roue**
	VOLVO S80 (TS, XY)
49959	**Lenker, Radaufhängung, Track Control Arm, Bras de liaison, suspension de roue**
	VOLVO S80 (TS, XY)
49960	**Lenker, Radaufhängung, Track Control Arm, Bras de liaison, suspension de roue**
	VOLVO XC70 CROSS COUNTRY
49961	**Lenker, Radaufhängung, Track Control Arm, Bras de liaison, suspension de roue**
	VOLVO XC70 CROSS COUNTRY
49962	**Lenker, Radaufhängung, Track Control Arm, Bras de liaison, suspension de roue**
	VOLVO S60,V70 II Kombi (P80_)
49963	**Lenker, Radaufhängung, Track Control Arm, Bras de liaison, suspension de roue**
	VOLVO S60,V70 II Kombi (P80_)
49964	**Axialgelenk, Spurstange, Inner Tie Rod, Rotule de direction intérieure, barre de connexion**
	VOLVO S60,S80 (TS, XY),V70 II Kombi (P80_),XC 90,XC70 CROSS COUNTRY
49965	**Spurstangenkopf, Tie Rod End, Rotule de barre de connexion**
	VOLVO XC 90,XC70 CROSS COUNTRY
49966	**Spurstangenkopf, Tie Rod End, Rotule de barre de connexion**
	VOLVO XC 90,XC70 CROSS COUNTRY
49980	**Stange/Strebe, Stabilisator, Link Stabiliser, Entretoise/tige, stabilisateur**
	SAAB 9000,9000 Schrägheck
49981	**Lenker, Radaufhängung, Track Control Arm, Bras de liaison, suspension de roue**
	SAAB 9000,9000 Schrägheck
49982	**Lenker, Radaufhängung, Track Control Arm, Bras de liaison, suspension de roue**
	SAAB 9000,9000 Schrägheck
49983	**Lenker, Radaufhängung, Track Control Arm, Bras de liaison, suspension de roue**
	SAAB 900 II,900 II Cabriolet,900 II Coupe
49984	**Lenker, Radaufhängung, Track Control Arm, Bras de liaison, suspension de roue**
	SAAB 900 II,900 II Cabriolet,900 II Coupe
51117/1	**Axialgelenk, Spurstange, Inner Tie Rod, Rotule de direction intérieure, barre de connexion**
	NISSAN KUBISTAR (X76),RENAULT CLIO I (B/C57_, 5/357_),CLIO II (BB0/1/2_, CB0/1/2_),CLIO II Kasten (SB0/1/2_),KANGOO (KC0/1_),KANGOO Rapid (FC0/1_),THALIA (LB0/1/2_)
51201	**Stange/Strebe, Stabilisator, Link Stabiliser, Entretoise/tige, stabilisateur**
	HYUNDAI SANTAMO,KIA JOICE
51202	**Stange/Strebe, Stabilisator, Link Stabiliser, Entretoise/tige, stabilisateur**
	HYUNDAI SANTAMO,KIA JOICE
51203	**Stange/Strebe, Stabilisator, Link Stabiliser, Entretoise/tige, stabilisateur**
	HYUNDAI HIGHWAY VAN,TRAJET (FO)
51204	**Stange/Strebe, Stabilisator, Link Stabiliser, Entretoise/tige, stabilisateur**
	HYUNDAI HIGHWAY VAN,TRAJET (FO)
51205HPS	**Stange/Strebe, Stabilisator, Link Stabiliser, Entretoise/tige, stabilisateur**
	HYUNDAI SANTA FÉ (SM)

51206HPS	**Stange/Strebe, Stabilisator, Link Stabiliser, Entretoise/tige, stabilisateur**
	HYUNDAI SANTA FÉ (SM)
51207	**Stange/Strebe, Stabilisator, Link Stabiliser, Entretoise/tige, stabilisateur**
	HYUNDAI SANTA FÉ (SM)
51208	**Stange/Strebe, Stabilisator, Link Stabiliser, Entretoise/tige, stabilisateur**
	HYUNDAI SANTA FÉ (SM)
51209	**Stange/Strebe, Stabilisator, Link Stabiliser, Entretoise/tige, stabilisateur**
	HYUNDAI ATOS (MX),ATOS PRIME (MX)
51210	**Axialgelenk, Spurstange, Inner Tie Rod, Rotule de direction intérieure, barre de connexion**
	HYUNDAI H-1 Kasten,H-1 Starex (KMF),STAREX (H1)
51211	**Lenker, Radaufhängung, Track Control Arm, Bras de liaison, suspension de roue**
	HYUNDAI ATOS (MX),ATOS PRIME (MX)
51212	**Lenker, Radaufhängung, Track Control Arm, Bras de liaison, suspension de roue**
	HYUNDAI ATOS (MX),ATOS PRIME (MX)
51215	**Lenker, Radaufhängung, Track Control Arm, Bras de liaison, suspension de roue**
	HYUNDAI SONATA IV (EU4),KIA MAGENTIS (GD)
51216	**Lenker, Radaufhängung, Track Control Arm, Bras de liaison, suspension de roue**
	HYUNDAI H-1 Kasten,H-1 Starex (KMF),STAREX (H1)
51217	**Lenker, Radaufhängung, Track Control Arm, Bras de liaison, suspension de roue**
	HYUNDAI H-1 Kasten,H-1 Starex (KMF),STAREX (H1)
51218	**Lenker, Radaufhängung, Track Control Arm, Bras de liaison, suspension de roue**
	HYUNDAI MATRIX (FC)
51219	**Lenker, Radaufhängung, Track Control Arm, Bras de liaison, suspension de roue**
	HYUNDAI MATRIX (FC)
51220	**Lenker, Radaufhängung, Track Control Arm, Bras de liaison, suspension de roue**
	HYUNDAI ELANTRA Stufenheck (XD),ELANTRA (XD)
51221	**Lenker, Radaufhängung, Track Control Arm, Bras de liaison, suspension de roue**
	HYUNDAI ELANTRA Stufenheck (XD),ELANTRA (XD)
51222	**Spurstangenkopf, Tie Rod End, Rotule de barre de connexion**
	HYUNDAI H-1 Travel
51223	**Spurstangenkopf, Tie Rod End, Rotule de barre de connexion**
	HYUNDAI H-1 Travel
51224	**Lenker, Radaufhängung, Track Control Arm, Bras de liaison, suspension de roue**
	HYUNDAI SONATA V (NF)
51225	**Lenker, Radaufhängung, Track Control Arm, Bras de liaison, suspension de roue**
	HYUNDAI SONATA V (NF)
51226	**Stange/Strebe, Stabilisator, Link Stabiliser, Entretoise/tige, stabilisateur**
	HYUNDAI SANTA FÉ (CM)
51227	**Stange/Strebe, Stabilisator, Link Stabiliser, Entretoise/tige, stabilisateur**
	HYUNDAI SANTA FÉ (CM)
51228	**Trag-/Führungsgelenk, Ball Joint, Rotule de suspension**
	HYUNDAI H-1 Travel
51230	**Stange/Strebe, Stabilisator, Link Stabiliser, Entretoise/tige, stabilisateur**
	KIA CARNIVAL II (GQ),CARNIVAL (UP)
51231	**Stange/Strebe, Stabilisator, Link Stabiliser, Entretoise/tige, stabilisateur**
	KIA CLARUS Kombi (GC),CLARUS (K9A)
51232	**Lenker, Radaufhängung, Track Control Arm, Bras de liaison, suspension de roue**
	HYUNDAI i30,i30 CW Kombi,KIA CEE´D Kombi (ED),CEE´D Schrägheck (ED),PRO CEE´D (ED)
51233	**Lenker, Radaufhängung, Track Control Arm, Bras de liaison, suspension de roue**
	HYUNDAI i30,i30 CW Kombi,KIA CEE´D Kombi (ED),CEE´D Schrägheck (ED),PRO CEE´D (ED)
51234	**Lenker, Radaufhängung, Track Control Arm, Bras de liaison, suspension de roue**
	HYUNDAI COUPE (GK),COUPE (RD),LANTRA II (J-2),LANTRA II Wagon (J2)
51235	**Lenker, Radaufhängung, Track Control Arm, Bras de liaison, suspension de roue**
	HYUNDAI COUPE (GK),COUPE (RD),LANTRA II (J-2),LANTRA II Wagon (J2)
51236	**Spurstangenkopf, Tie Rod End, Rotule de barre de connexion**
	HYUNDAI i30,i30 CW Kombi,KIA CEE´D Kombi (ED),CEE´D Schrägheck (ED),PRO CEE´D (ED)
51237	**Spurstangenkopf, Tie Rod End, Rotule de barre de connexion**
	HYUNDAI i30,i30 CW Kombi,KIA CEE´D Kombi (ED),CEE´D Schrägheck (ED),PRO CEE´D (ED)

51238	**Axialgelenk, Spurstange, Inner Tie Rod, Rotule de direction intérieure, barre de connexion**
	HYUNDAI i30,i30 CW Kombi,KIA CEE´D Kombi (ED),CEE´D Schrägheck (ED),PRO CEE´D (ED)
51239	**Trag-/Führungsgelenk, Ball Joint, Rotule de suspension**
	HYUNDAI i30,i30 CW Kombi,KIA CEE´D Kombi (ED),CEE´D Schrägheck (ED),PRO CEE´D (ED)
51240	**Stange/Strebe, Stabilisator, Link Stabiliser, Entretoise/tige, stabilisateur**
	MITSUBISHI SPACE RUNNER (N1_W, N2_W),SPACE WAGON (N3_W, N4_W)
51241	**Stange/Strebe, Stabilisator, Link Stabiliser, Entretoise/tige, stabilisateur**
	HYUNDAI ELANTRA Stufenheck (XD),ELANTRA (XD),i30,i30 CW Kombi,KIA CEE´D Kombi (ED),CEE´D Schrägheck (ED),PRO CEE´D (ED)
51242	**Stange/Strebe, Stabilisator, Link Stabiliser, Entretoise/tige, stabilisateur**
	HYUNDAI i30,i30 CW Kombi,KIA CEE´D Kombi (ED),CEE´D Schrägheck (ED),PRO CEE´D (ED)
51250	**Spurstangenkopf, Tie Rod End, Rotule de barre de connexion**
	OPEL AGILA,SUZUKI IGNIS (FH),IGNIS II,SPLASH,SWIFT III (SG),VAUXHALL AGILA
51251	**Axialgelenk, Spurstange, Inner Tie Rod, Rotule de direction intérieure, barre de connexion**
	OPEL AGILA,SUZUKI SPLASH,SWIFT III (SG),VAUXHALL AGILA
51252	**Lenker, Radaufhängung, Track Control Arm, Bras de liaison, suspension de roue**
	OPEL AGILA,SUZUKI SPLASH,SWIFT III (SG),VAUXHALL AGILA
51253	**Lenker, Radaufhängung, Track Control Arm, Bras de liaison, suspension de roue**
	OPEL AGILA,SUZUKI SPLASH,SWIFT III (SG),VAUXHALL AGILA
51254	**Trag-/Führungsgelenk, Ball Joint, Rotule de suspension**
	OPEL AGILA,SUZUKI SPLASH,SWIFT III (SG),VAUXHALL AGILA
51255	**Stange/Strebe, Stabilisator, Link Stabiliser, Entretoise/tige, stabilisateur**
	OPEL AGILA,SUZUKI SPLASH,SWIFT III (SG),VAUXHALL AGILA
51281	**Stange/Strebe, Stabilisator, Link Stabiliser, Entretoise/tige, stabilisateur**
	NISSAN ALMERA TINO (V10)
51282	**Stange/Strebe, Stabilisator, Link Stabiliser, Entretoise/tige, stabilisateur**
	NISSAN ALMERA TINO (V10)
51283	**Trag-/Führungsgelenk, Ball Joint, Rotule de suspension**
	NISSAN MICRA (K12),NOTE (E11)
51284	**Lenker, Radaufhängung, Track Control Arm, Bras de liaison, suspension de roue**
	NISSAN X-TRAIL (T30)
51285	**Lenker, Radaufhängung, Track Control Arm, Bras de liaison, suspension de roue**
	NISSAN X-TRAIL (T30)
51286	**Lenker, Radaufhängung, Track Control Arm, Bras de liaison, suspension de roue**
	NISSAN MAXIMA QX (A33)
51287	**Lenker, Radaufhängung, Track Control Arm, Bras de liaison, suspension de roue**
	NISSAN MAXIMA QX (A33)
51290HPS	**Stange/Strebe, Stabilisator, Link Stabiliser, Entretoise/tige, stabilisateur**
	CHEVROLET LACETTI,NUBIRA Kombi,NUBIRA Stufenheck,DAEWOO LACETTI Schrägheck (KLAN),NUBIRA Stufenheck (KLAN),NUBIRA Wagon (KLAN)
51291HPS	**Stange/Strebe, Stabilisator, Link Stabiliser, Entretoise/tige, stabilisateur**
	CHEVROLET LACETTI,NUBIRA Kombi,NUBIRA Stufenheck,DAEWOO LACETTI Schrägheck (KLAN),NUBIRA Stufenheck (KLAN),NUBIRA Wagon (KLAN)
51292	**Axialgelenk, Spurstange, Inner Tie Rod, Rotule de direction intérieure, barre de connexion**
	DAEWOO MATIZ (KLYA)
51293HPS	**Stange/Strebe, Stabilisator, Link Stabiliser, Entretoise/tige, stabilisateur**
	CHEVROLET LACETTI,NUBIRA Kombi,NUBIRA Stufenheck,DAEWOO LACETTI Schrägheck (KLAN),NUBIRA Stufenheck (KLAN),NUBIRA Wagon (KLAN)
51294	**Lenker, Radaufhängung, Track Control Arm, Bras de liaison, suspension de roue**
	CHEVROLET LACETTI,NUBIRA Kombi,NUBIRA Stufenheck,DAEWOO LACETTI Schrägheck (KLAN),NUBIRA Stufenheck (KLAN)
51295	**Lenker, Radaufhängung, Track Control Arm, Bras de liaison, suspension de roue**
	CHEVROLET LACETTI,NUBIRA Kombi,NUBIRA Stufenheck,DAEWOO LACETTI Schrägheck (KLAN),NUBIRA Stufenheck (KLAN)
51296	**Lenker, Radaufhängung, Track Control Arm, Bras de liaison, suspension de roue**
	CHEVROLET AVEO Stufenheck,KALOS,KALOS Stufenheck,DAEWOO KALOS (KLAS)
51297	**Lenker, Radaufhängung, Track Control Arm, Bras de liaison, suspension de roue**
	CHEVROLET AVEO Stufenheck,KALOS,KALOS Stufenheck,DAEWOO KALOS (KLAS)
51298	**Spurstangenkopf, Tie Rod End, Rotule de barre de connexion**
	CHEVROLET AVEO Schrägheck,AVEO Stufenheck,KALOS,KALOS Stufenheck,DAEWOO KALOS (KLAS),KALOS Stufenheck (KLAS)
51299	**Spurstangenkopf, Tie Rod End, Rotule de barre de connexion**
	CHEVROLET AVEO Schrägheck,AVEO Stufenheck,KALOS,KALOS Stufenheck,DAEWOO KALOS (KLAS),KALOS Stufenheck (KLAS)
51300	**Trag-/Führungsgelenk, Ball Joint, Rotule de suspension**
	CHEVROLET AVEO Schrägheck,AVEO Stufenheck,KALOS,KALOS Stufenheck,DAEWOO KALOS (KLAS),KALOS Stufenheck (KLAS)

51301	**Axialgelenk, Spurstange, Inner Tie Rod, Rotule de direction intérieure, barre de connexion**
	CHEVROLET CAPTIVA,OPEL ANTARA,VAUXHALL ANTARA
51302	**Stange/Strebe, Stabilisator, Link Stabiliser, Entretoise/tige, stabilisateur**
	CHEVROLET CAPTIVA,OPEL ANTARA,VAUXHALL ANTARA
51303	**Stange/Strebe, Stabilisator, Link Stabiliser, Entretoise/tige, stabilisateur**
	CHEVROLET CAPTIVA,OPEL ANTARA,VAUXHALL ANTARA
51330	**Lenker, Radaufhängung, Track Control Arm, Bras de liaison, suspension de roue**
	MAZDA 3 (BK),3 Stufenheck (BK)
51331	**Lenker, Radaufhängung, Track Control Arm, Bras de liaison, suspension de roue**
	MAZDA 3 (BK),3 Stufenheck (BK)
51332HPS	**Stange/Strebe, Stabilisator, Link Stabiliser, Entretoise/tige, stabilisateur**
	MAZDA PREMACY (CP),323 F VI (BJ),323 S VI (BJ)
51334HPS	**Stange/Strebe, Stabilisator, Link Stabiliser, Entretoise/tige, stabilisateur**
	MAZDA 6 (GG),6 Hatchback (GG),6 Station Wagon (GY)
51335HPS	**Stange/Strebe, Stabilisator, Link Stabiliser, Entretoise/tige, stabilisateur**
	MAZDA 6 (GG),6 Hatchback (GG),6 Station Wagon (GY)
51336	**Stange/Strebe, Stabilisator, Link Stabiliser, Entretoise/tige, stabilisateur**
	MAZDA 6 (GG),6 Hatchback (GG),6 Station Wagon (GY)
51337	**Stange/Strebe, Stabilisator, Link Stabiliser, Entretoise/tige, stabilisateur**
	MAZDA XEDOS 9 (TA)
51338	**Stange/Strebe, Stabilisator, Link Stabiliser, Entretoise/tige, stabilisateur**
	MAZDA XEDOS 9 (TA)
51339HPS	**Stange/Strebe, Stabilisator, Link Stabiliser, Entretoise/tige, stabilisateur**
	MAZDA XEDOS 9 (TA)
51340	**Spurstangenkopf, Tie Rod End, Rotule de barre de connexion**
	MAZDA 6 (GG),6 (GH),6 Hatchback (GG),6 Sport (GH),6 Sport Kombi (GH),6 Station Wagon (GY)
51341	**Spurstangenkopf, Tie Rod End, Rotule de barre de connexion**
	MAZDA 6 (GG),6 (GH),6 Hatchback (GG),6 Sport (GH),6 Sport Kombi (GH),6 Station Wagon (GY)
51342	**Spurstangenkopf, Tie Rod End, Rotule de barre de connexion**
	MAZDA 3 (BK),3 Stufenheck (BK),5 (CR19)
51343	**Spurstangenkopf, Tie Rod End, Rotule de barre de connexion**
	MAZDA 3 (BK),3 Stufenheck (BK),5 (CR19)
51344	**Axialgelenk, Spurstange, Inner Tie Rod, Rotule de direction intérieure, barre de connexion**
	CHANGAN FORD FOCUS Schrägheck (CD5),FOCUS Stufenheck (CD4),MAZDA 3 (BK),3 Stufenheck (BK),5 (CR19)
51371	**Stange/Strebe, Stabilisator, Link Stabiliser, Entretoise/tige, stabilisateur**
	TOYOTA AVENSIS Combi (T25),AVENSIS Stufenheck (T25),AVENSIS (T25)
51372	**Stange/Strebe, Stabilisator, Link Stabiliser, Entretoise/tige, stabilisateur**
	TOYOTA AVENSIS Combi (T25),AVENSIS Stufenheck (T25),AVENSIS (T25)
51373HPS	**Stange/Strebe, Stabilisator, Link Stabiliser, Entretoise/tige, stabilisateur**
	TOYOTA AVENSIS VERSO (AC_),PICNIC (_XM10)
51374HPS	**Stange/Strebe, Stabilisator, Link Stabiliser, Entretoise/tige, stabilisateur**
	TOYOTA LAND CRUISER (J12)
51377HPS	**Stange/Strebe, Stabilisator, Link Stabiliser, Entretoise/tige, stabilisateur**
	TOYOTA AVENSIS Liftback (_T22_),AVENSIS Station Wagon (_T22_),AVENSIS (_T22_)
51378HPS	**Stange/Strebe, Stabilisator, Link Stabiliser, Entretoise/tige, stabilisateur**
	TOYOTA LAND CRUISER (J12),LAND CRUISER (_J6_)
51379HPS	**Stange/Strebe, Stabilisator, Link Stabiliser, Entretoise/tige, stabilisateur**
	TOYOTA LAND CRUISER (J12),LAND CRUISER (_J6_)
51380	**Spurstangenkopf, Tie Rod End, Rotule de barre de connexion**
	TOYOTA COROLLA Combi (_E12J_, _E12T_),COROLLA (_E12U_, _E12J_),COROLLA Stufenheck (_E12J_, _E12T_),COROLLA Verso (_E12J_),PRIUS Liftback,PRIUS Stufenheck (NHW11_)
51381	**Spurstangenkopf, Tie Rod End, Rotule de barre de connexion**
	TOYOTA COROLLA Combi (_E12J_, _E12T_),COROLLA (_E12U_, _E12J_),COROLLA Stufenheck (_E12J_, _E12T_),COROLLA Verso (_E12J_),PRIUS Liftback,PRIUS Stufenheck (NHW11_)
51382	**Axialgelenk, Spurstange, Inner Tie Rod, Rotule de direction intérieure, barre de connexion**
	TOYOTA COROLLA Combi (_E12J_, _E12T_),COROLLA Compact (_E11_),COROLLA (_E12U_, _E12J_),COROLLA Liftback (_E11_),COROLLA Stufenheck (_E12J_, _E12T_),COROLLA Verso (_E12J_)
51383	**Trag-/Führungsgelenk, Ball Joint, Rotule de suspension**
	TOYOTA LITEACE Bus (CM30_G, KM30_G),LITEACE Kasten (CM3_V, KM3_V),LITEACE Kasten (M2_V),MODELL F Bus (_R2_, 31)
51384	**Lenker, Radaufhängung, Track Control Arm, Bras de liaison, suspension de roue**
	TOYOTA LAND CRUISER (J12)

51385	**Lenker, Radaufhängung, Track Control Arm, Bras de liaison, suspension de roue**
	TOYOTA LAND CRUISER (J12)
51386	**Lenker, Radaufhängung, Track Control Arm, Bras de liaison, suspension de roue**
	TOYOTA LAND CRUISER (J12)
51387	**Lenker, Radaufhängung, Track Control Arm, Bras de liaison, suspension de roue**
	TOYOTA LAND CRUISER (J12)
51388	**Trag-/Führungsgelenk, Ball Joint, Rotule de suspension**
	LEXUS RX (MCU_),RX (XU1),TOYOTA CAMRY (_V20),CAMRY (_V30),PREVIA (ACR3_)
51389	**Trag-/Führungsgelenk, Ball Joint, Rotule de suspension**
	LEXUS RX (MCU_),RX (XU1),TOYOTA CAMRY SOLARA Cabriolet,CAMRY SOLARA Coupe,CAMRY (_V30),PREVIA (ACR3_)
51390	**Axialgelenk, Spurstange, Inner Tie Rod, Rotule de direction intérieure, barre de connexion**
	TOYOTA CAMRY (_V30)
51391	**Stange/Strebe, Stabilisator, Link Stabiliser, Entretoise/tige, stabilisateur**
	TOYOTA YARIS,YARIS (_CP10),YARIS VERSO (NC/LP2_)
51392	**Stange/Strebe, Stabilisator, Link Stabiliser, Entretoise/tige, stabilisateur**
	TOYOTA AURIS,RAV 4 III (ACA_, ACE_, ALA_)
51500	**Lenker, Radaufhängung, Track Control Arm, Bras de liaison, suspension de roue**
	HONDA ACCORD VIII (CL_, CM_),ACCORD VIII Tourer (CM_)
51501	**Lenker, Radaufhängung, Track Control Arm, Bras de liaison, suspension de roue**
	HONDA ACCORD VIII (CL_, CM_),ACCORD VIII Tourer (CM_)
51502	**Lenker, Radaufhängung, Track Control Arm, Bras de liaison, suspension de roue**
	HONDA JAZZ II (GD)
51503	**Lenker, Radaufhängung, Track Control Arm, Bras de liaison, suspension de roue**
	HONDA JAZZ II (GD)
51504	**Trag-/Führungsgelenk, Ball Joint, Rotule de suspension**
	HONDA ACCORD VI (CE, CF),CIVIC IV Coupe (EJ),CIVIC IV (EG, EH),CIVIC IV Hatchback (EG),CIVIC V Aerodeck,CIVIC V Coupe (EJ6, EJ8),CIVIC V (EJ9, EK3/4),CIVIC V Fastback (MB),CIVIC V Hatchback (EJ9, EK1/3/4),CR-V I (RD),CR-V II (RD_)
51505	**Stange/Strebe, Stabilisator, Link Stabiliser, Entretoise/tige, stabilisateur**
	HONDA CIVIC V Aerodeck,CIVIC V Coupe (EJ6, EJ8),CIVIC V (EJ9, EK3/4),CIVIC V Fastback (MB),CIVIC V Hatchback (EJ9, EK1/3/4),CIVIC VI (EU),CIVIC VI Hatchback (EU, EP, ES),INTEGRA Coupe (DC2, DC4)
51506	**Stange/Strebe, Stabilisator, Link Stabiliser, Entretoise/tige, stabilisateur**
	HONDA LEGEND I Coupe (KA3),LEGEND I (HS, KA),SHUTTLE (RA)
51507HPS	**Stange/Strebe, Stabilisator, Link Stabiliser, Entretoise/tige, stabilisateur**
	HONDA HR-V (GH)
51508HPS	**Stange/Strebe, Stabilisator, Link Stabiliser, Entretoise/tige, stabilisateur**
	HONDA HR-V (GH)
51520	**Stange/Strebe, Stabilisator, Link Stabiliser, Entretoise/tige, stabilisateur**
	NISSAN X-TRAIL (T30)
51521	**Stange/Strebe, Stabilisator, Link Stabiliser, Entretoise/tige, stabilisateur**
	NISSAN X-TRAIL (T30)
51522	**Stange/Strebe, Stabilisator, Link Stabiliser, Entretoise/tige, stabilisateur**
	NISSAN PATROL GR II (Y61)
51525HPS	**Stange/Strebe, Stabilisator, Link Stabiliser, Entretoise/tige, stabilisateur**
	NISSAN PRIMERA Hatchback (P12),PRIMERA (P12),PRIMERA Traveller (WP12)
51526	**Stange/Strebe, Stabilisator, Link Stabiliser, Entretoise/tige, stabilisateur**
	NISSAN PATROL GR I (Y60),PATROL GR II (Y61)
51527	**Lenker, Radaufhängung, Track Control Arm, Bras de liaison, suspension de roue**
	NISSAN ALMERA II Hatchback (N16),ALMERA II (N16)
51528	**Lenker, Radaufhängung, Track Control Arm, Bras de liaison, suspension de roue**
	NISSAN ALMERA II Hatchback (N16),ALMERA II (N16)
51529	**Lenker, Radaufhängung, Track Control Arm, Bras de liaison, suspension de roue**
	NISSAN PRIMERA Hatchback (P12),PRIMERA (P12),PRIMERA Traveller (WP12)
51530	**Lenker, Radaufhängung, Track Control Arm, Bras de liaison, suspension de roue**
	NISSAN PRIMERA Hatchback (P12),PRIMERA (P12),PRIMERA Traveller (WP12)
51531	**Lenker, Radaufhängung, Track Control Arm, Bras de liaison, suspension de roue**
	KIA PRIDE (DA),MAZDA 121 I (DA)
51532	**Stange/Strebe, Stabilisator, Link Stabiliser, Entretoise/tige, stabilisateur**
	KIA SORENTO (JC)
51533	**Axialgelenk, Spurstange, Inner Tie Rod, Rotule de direction intérieure, barre de connexion**
	KIA PRIDE (DA),PRIDE Kombi,MAZDA 121 I (DA)

51534	**Trag-/Führungsgelenk, Ball Joint, Rotule de suspension**
	MAZDA B-SERIE (UF)
51535	**Trag-/Führungsgelenk, Ball Joint, Rotule de suspension**
	MAZDA B-SERIE (UF)
51536	**Trag-/Führungsgelenk, Ball Joint, Rotule de suspension**
	MAZDA B-SERIE (UF),B-SERIE (UN)
51537	**Trag-/Führungsgelenk, Ball Joint, Rotule de suspension**
	FORD ECONOVAN Kasten (KAA),ECONOVAN (KBA, KCA),MAZDA E-SERIE Bus (SR1),E-SERIE Kasten (SR2)
51538	**Lenker, Radaufhängung, Track Control Arm, Bras de liaison, suspension de roue**
	MAZDA 626 III Coupe (GD),626 III (GD),626 III Hatchback (GD),626 III Station Wagon (GV)
51539	**Lenker, Radaufhängung, Track Control Arm, Bras de liaison, suspension de roue**
	MAZDA 626 III Coupe (GD),626 III (GD),626 III Hatchback (GD),626 III Station Wagon (GV)
51540	**Trag-/Führungsgelenk, Ball Joint, Rotule de suspension**
	FORD ECONOVAN Kasten (KAA),ECONOVAN (KBA, KCA),MAZDA E-SERIE Bus (SR1),E-SERIE Kasten (SR2)
51541HPS	**Stange/Strebe, Stabilisator, Link Stabiliser, Entretoise/tige, stabilisateur**
	HONDA CR-V II (RD_)
51542HPS	**Stange/Strebe, Stabilisator, Link Stabiliser, Entretoise/tige, stabilisateur**
	HONDA CR-V II (RD_)
51543	**Stange/Strebe, Stabilisator, Link Stabiliser, Entretoise/tige, stabilisateur**
	MITSUBISHI PAJERO III (V60, V70),PAJERO SPORT (K90)
51544	**Stange/Strebe, Stabilisator, Link Stabiliser, Entretoise/tige, stabilisateur**
	MITSUBISHI PAJERO III (V60, V70),PAJERO SPORT (K90)
51545HPS	**Stange/Strebe, Stabilisator, Link Stabiliser, Entretoise/tige, stabilisateur**
	MITSUBISHI PAJERO CLASSIC (V2_W),PAJERO III (V60, V70),PAJERO SPORT (K90)
51546	**Stange/Strebe, Stabilisator, Link Stabiliser, Entretoise/tige, stabilisateur**
	MITSUBISHI PAJERO CLASSIC (V2_W),PAJERO III (V60, V70),PAJERO SPORT (K90)
51549	**Stange/Strebe, Stabilisator, Link Stabiliser, Entretoise/tige, stabilisateur**
	MITSUBISHI PAJERO II Canvas Top (V2_W, V4_W),PAJERO II (V2_W, V4_W)
51550	**Lenker, Radaufhängung, Track Control Arm, Bras de liaison, suspension de roue**
	MITSUBISHI COLT V (CJ_A),SPACE STAR (DG0)
51551	**Lenker, Radaufhängung, Track Control Arm, Bras de liaison, suspension de roue**
	MITSUBISHI COLT V (CJ_A),SPACE STAR (DG0)
51552	**Lenker, Radaufhängung, Track Control Arm, Bras de liaison, suspension de roue**
	LEXUS ES (F1, F2),TOYOTA CAMRY (_V20),CAMRY (_V30),PREVIA (ACR3_)
51553	**Lenker, Radaufhängung, Track Control Arm, Bras de liaison, suspension de roue**
	LEXUS ES (F1, F2),TOYOTA CAMRY (_V20),CAMRY (_V30),PREVIA (ACR3_)
51554	**Lenker, Radaufhängung, Track Control Arm, Bras de liaison, suspension de roue**
	TOYOTA CAMRY (_V20)
51555	**Lenker, Radaufhängung, Track Control Arm, Bras de liaison, suspension de roue**
	TOYOTA CAMRY (_V20)
51560	**Lenker, Radaufhängung, Track Control Arm, Bras de liaison, suspension de roue**
	TOYOTA COROLLA Combi (_E12J_, _E12T_),COROLLA (_E12U_, _E12J_),COROLLA Stufenheck (_E12J_, _E12T_),COROLLA Verso (_E12J_)
51561	**Lenker, Radaufhängung, Track Control Arm, Bras de liaison, suspension de roue**
	TOYOTA COROLLA Combi (_E12J_, _E12T_),COROLLA (_E12U_, _E12J_),COROLLA Stufenheck (_E12J_, _E12T_),COROLLA Verso (_E12J_)
51564	**Trag-/Führungsgelenk, Ball Joint, Rotule de suspension**
	TOYOTA LAND CRUISER 90 (_J9_)
51565	**Trag-/Führungsgelenk, Ball Joint, Rotule de suspension**
	TOYOTA YARIS (_CP10),YARIS VERSO (NC/LP2_)
51567	**Spurstangenkopf, Tie Rod End, Rotule de barre de connexion**
	TOYOTA HILUX Pick-up (_N_),4 RUNNER (_N130)
51568	**Stange/Strebe, Stabilisator, Link Stabiliser, Entretoise/tige, stabilisateur**
	TOYOTA LAND CRUISER Hardtop (_J7_),LAND CRUISER (_J7_)
51569	**Stange/Strebe, Stabilisator, Link Stabiliser, Entretoise/tige, stabilisateur**
	TOYOTA LAND CRUISER 90 (_J9_)
51570	**Stange/Strebe, Stabilisator, Link Stabiliser, Entretoise/tige, stabilisateur**
	TOYOTA LAND CRUISER 90 (_J9_)
51571	**Lenker, Radaufhängung, Track Control Arm, Bras de liaison, suspension de roue**
	TOYOTA LAND CRUISER 90 (_J9_)

51572	**Lenker, Radaufhängung, Track Control Arm, Bras de liaison, suspension de roue**
	TOYOTA LAND CRUISER 90 (_J9_)
51573	**Stange/Strebe, Stabilisator, Link Stabiliser, Entretoise/tige, stabilisateur**
	TOYOTA LAND CRUISER Hardtop (_J7_),LAND CRUISER (_J7_)
51574	**Stange/Strebe, Stabilisator, Link Stabiliser, Entretoise/tige, stabilisateur**
	TOYOTA LAND CRUISER 100 (_J10_)
51575	**Stange/Strebe, Stabilisator, Link Stabiliser, Entretoise/tige, stabilisateur**
	TOYOTA CAMRY (_V30)
51576	**Stange/Strebe, Stabilisator, Link Stabiliser, Entretoise/tige, stabilisateur**
	TOYOTA LAND CRUISER Hardtop (_J7_),LAND CRUISER (J12),LAND CRUISER (_J7_)
51577HPS	**Stange/Strebe, Stabilisator, Link Stabiliser, Entretoise/tige, stabilisateur**
	TOYOTA AVENSIS Combi (T25),AVENSIS Stufenheck (T25),AVENSIS (T25),COROLLA Combi (_E12J_, _E12T_),COROLLA (_E12U_, _E12J_),COROLLA Liftback (_E11_),COROLLA Stufenheck (_E12J_, _E12T_),COROLLA Verso (_E12J_),COROLLA Verso (ZER_, ZZE_),PRIUS Liftback,PRIUS Stufenheck (NHW11_)
51581	**Spurstangenkopf, Tie Rod End, Rotule de barre de connexion**
	FORD ECONOVAN Kasten (KAA),ECONOVAN (KBA, KCA),MAZDA E-SERIE Bus (SR1),E-SERIE Kasten (SR2)
51582	**Lenker, Radaufhängung, Track Control Arm, Bras de liaison, suspension de roue**
	KIA SEPHIA (FA),SHUMA (FB)
51583	**Lenker, Radaufhängung, Track Control Arm, Bras de liaison, suspension de roue**
	KIA SEPHIA (FA),SHUMA (FB)
51584	**Stange/Strebe, Stabilisator, Link Stabiliser, Entretoise/tige, stabilisateur**
	TOYOTA LAND CRUISER 100 (_J10_)
51584HPS	**Stange/Strebe, Stabilisator, Link Stabiliser, Entretoise/tige, stabilisateur**
	TOYOTA LAND CRUISER 100 (_J10_)
51585	**Stange/Strebe, Stabilisator, Link Stabiliser, Entretoise/tige, stabilisateur**
	TOYOTA LAND CRUISER 100 (_J10_)
51585HPS	**Stange/Strebe, Stabilisator, Link Stabiliser, Entretoise/tige, stabilisateur**
	TOYOTA LAND CRUISER 100 (_J10_)
51586	**Stange/Strebe, Stabilisator, Link Stabiliser, Entretoise/tige, stabilisateur**
	TOYOTA 4 RUNNER (_N130)
51587	**Stange/Strebe, Stabilisator, Link Stabiliser, Entretoise/tige, stabilisateur**
	TOYOTA 4 RUNNER (_N130)
51588	**Stange/Strebe, Stabilisator, Link Stabiliser, Entretoise/tige, stabilisateur**
	TOYOTA HIACE IV Kasten,HIACE IV Wagon
51589	**Stange/Strebe, Stabilisator, Link Stabiliser, Entretoise/tige, stabilisateur**
	TOYOTA HIACE IV Kasten,HIACE IV Wagon
51590	**Lenker, Radaufhängung, Track Control Arm, Bras de liaison, suspension de roue**
	SUZUKI BALENO (EG),BALENO Kombi (EG),BALENO Schrägheck (EG)
51591	**Lenker, Radaufhängung, Track Control Arm, Bras de liaison, suspension de roue**
	SUZUKI BALENO (EG),BALENO Kombi (EG),BALENO Schrägheck (EG)
51592	**Stange/Strebe, Stabilisator, Link Stabiliser, Entretoise/tige, stabilisateur**
	SUZUKI SWIFT Cabriolet (SF413),SWIFT II (AH, AJ),SWIFT II Schrägheck (EA, MA)
51593	**Stange/Strebe, Stabilisator, Link Stabiliser, Entretoise/tige, stabilisateur**
	SUZUKI SWIFT Cabriolet (SF413),SWIFT I (AA),SWIFT II (AH, AJ),SWIFT II Schrägheck (EA, MA)
51594	**Stange/Strebe, Stabilisator, Link Stabiliser, Entretoise/tige, stabilisateur**
	ISUZU TROOPER,TROOPER Soft Top,TROOPER Soft Top (UB),TROOPER (UB),OPEL FRONTERA A Sport (5_SUD2),FRONTERA A (5_MWL4),MONTEREY A (UBS_),MONTEREY B
51594HPS	**Stange/Strebe, Stabilisator, Link Stabiliser, Entretoise/tige, stabilisateur**
	ISUZU TROOPER,TROOPER Soft Top,TROOPER Soft Top (UB),TROOPER (UB),OPEL FRONTERA A Sport (5_SUD2),FRONTERA A (5_MWL4),MONTEREY A (UBS_),MONTEREY B
51595	**Lenker, Radaufhängung, Track Control Arm, Bras de liaison, suspension de roue**
	SUZUKI GRAND VITARA (FT, GT)
51596	**Lenker, Radaufhängung, Track Control Arm, Bras de liaison, suspension de roue**
	SUZUKI GRAND VITARA (FT, GT)
51597	**Stange/Strebe, Stabilisator, Link Stabiliser, Entretoise/tige, stabilisateur**
	TOYOTA CELICA (ZZT23_),COROLLA Combi (_E12J_, _E12T_),COROLLA (_E12U_, _E12J_),COROLLA Liftback (_E11_),COROLLA Stufenheck (_E12J_, _E12T_),COROLLA Verso (_E12J_)
51597HPS	**Stange/Strebe, Stabilisator, Link Stabiliser, Entretoise/tige, stabilisateur**
	TOYOTA CELICA (ZZT23_),COROLLA Combi (_E12J_, _E12T_),COROLLA (_E12U_, _E12J_),COROLLA Liftback (_E11_),COROLLA Stufenheck (_E12J_, _E12T_),COROLLA Verso (_E12J_)
51598	**Stange/Strebe, Stabilisator, Link Stabiliser, Entretoise/tige, stabilisateur**
	MITSUBISHI COLT IV (CA_A),LANCER V (CB/D_A),PROTON PERSONA 300 (C9_M),PERSONA 400 (C9_S),PERSONA 400 Hatchback (C9_C, C9_S)

51600HPS	**Stange/Strebe, Stabilisator, Link Stabiliser, Entretoise/tige, stabilisateur**
	FORD TOURNEO CONNECT,TRANSIT CONNECT (P65_, P70_, P80_)
51601	**Stange/Strebe, Stabilisator, Link Stabiliser, Entretoise/tige, stabilisateur**
	FORD TOURNEO CONNECT,TRANSIT CONNECT (P65_, P70_, P80_)
51602	**Lenker, Radaufhängung, Track Control Arm, Bras de liaison, suspension de roue**
	CHANGAN FORD FOCUS Schrägheck (CD5),FOCUS Stufenheck (CD4),FORD C-MAX,FOCUS C-MAX,FOCUS II Cabriolet,FOCUS II (DA_),FOCUS II Stufenheck (DA_),FOCUS II Turnier (DAW_),VOLVO C70 II Cabriolet,S40 II (MS),V50 (MW)
51603	**Lenker, Radaufhängung, Track Control Arm, Bras de liaison, suspension de roue**
	CHANGAN FORD FOCUS Schrägheck (CD5),FOCUS Stufenheck (CD4),FORD C-MAX,FOCUS C-MAX,FOCUS II Cabriolet,FOCUS II (DA_),FOCUS II Stufenheck (DA_),FOCUS II Turnier (DAW_),VOLVO C70 II Cabriolet,S40 II (MS),V50 (MW)
51604	**Stange/Strebe, Stabilisator, Link Stabiliser, Entretoise/tige, stabilisateur**
	FORD FIESTA III (GFJ)
51605	**Lenker, Radaufhängung, Track Control Arm, Bras de liaison, suspension de roue**
	FORD FOCUS (DAW, DBW),FOCUS Stufenheck (DFW)
51606	**Lenker, Radaufhängung, Track Control Arm, Bras de liaison, suspension de roue**
	FORD FOCUS (DAW, DBW),FOCUS Stufenheck (DFW)
51607	**Lenker, Radaufhängung, Track Control Arm, Bras de liaison, suspension de roue**
	FORD FOCUS Kombi (DNW)
51608	**Lenker, Radaufhängung, Track Control Arm, Bras de liaison, suspension de roue**
	FORD FOCUS Kombi (DNW)
51609	**Lenker, Radaufhängung, Track Control Arm, Bras de liaison, suspension de roue**
	FORD FOCUS Kombi (DNW)
51610	**Stange/Strebe, Stabilisator, Link Stabiliser, Entretoise/tige, stabilisateur**
	FORD FOCUS C-MAX,FOCUS II Cabriolet,FOCUS II (DA_),FOCUS II Stufenheck (DA_),FOCUS II Turnier (DAW_),MAZDA 3 (BK),3 Stufenheck (BK),5 (CR19),VOLVO C70 II Cabriolet,S40 II (MS),V50 (MW)
51612	**Reparatursatz, Querlenker, Suspension Kit, Kit de réparation, bras triangulaire**
	FORD FOCUS (DAW, DBW),FOCUS Stufenheck (DFW)
51613	**Stange/Strebe, Radaufhängung, Link, wheel suspension, Biellette de barre stabilisatrice**
	FORD MONDEO III (B5Y),MONDEO III Stufenheck (B4Y)
51614	**Stange/Strebe, Radaufhängung, Link, wheel suspension, Biellette de barre stabilisatrice**
	FORD MONDEO III (B5Y),MONDEO III Stufenheck (B4Y)
51615	**Stange/Strebe, Radaufhängung, Link, wheel suspension, Biellette de barre stabilisatrice**
	FORD MONDEO III (B5Y),MONDEO III Stufenheck (B4Y)
51616	**Lenker, Radaufhängung, Track Control Arm, Bras de liaison, suspension de roue**
	FORD MONDEO III Kombi (BWY)
51617	**Lenker, Radaufhängung, Track Control Arm, Bras de liaison, suspension de roue**
	FORD MONDEO I Kombi (BNP),MONDEO II Kombi (BNP),MONDEO III Kombi (BWY)
51618	**Lenker, Radaufhängung, Track Control Arm, Bras de liaison, suspension de roue**
	FORD MONDEO III Kombi (BWY)
51619	**Spurstangenkopf, Tie Rod End, Rotule de barre de connexion**
	FORD GALAXY,MONDEO IV,MONDEO IV Stufenheck,MONDEO IV Turnier,S-MAX,LAND ROVER FREELANDER 2 (FA_),VOLVO S80 II,V70 III Kombi,XC60,XC70 II
51620	**Spurstangenkopf, Tie Rod End, Rotule de barre de connexion**
	FORD GALAXY,MONDEO IV,MONDEO IV Stufenheck,MONDEO IV Turnier,S-MAX,LAND ROVER FREELANDER 2 (FA_),VOLVO S80 II,V70 III Kombi,XC60,XC70 II
51621	**Stange/Strebe, Stabilisator, Link Stabiliser, Entretoise/tige, stabilisateur**
	FORD GALAXY,MONDEO IV,MONDEO IV Stufenheck,MONDEO IV Turnier,S-MAX,VOLVO S80 II,V70 III Kombi,XC60,XC70 II
51622	**Lenker, Radaufhängung, Track Control Arm, Bras de liaison, suspension de roue**
	FORD GALAXY,MONDEO IV,MONDEO IV Stufenheck,MONDEO IV Turnier,S-MAX,VOLVO S80 II,V70 III Kombi
51623	**Lenker, Radaufhängung, Track Control Arm, Bras de liaison, suspension de roue**
	FORD GALAXY,MONDEO IV,MONDEO IV Stufenheck,MONDEO IV Turnier,S-MAX,VOLVO S80 II,V70 III Kombi
51624	**Trag-/Führungsgelenk, Ball Joint, Rotule de suspension**
	FORD GALAXY,MONDEO IV,MONDEO IV Stufenheck,MONDEO IV Turnier,S-MAX,VOLVO S80 II,V70 III Kombi
51625	**Stange/Strebe, Stabilisator, Link Stabiliser, Entretoise/tige, stabilisateur**
	FORD GALAXY,MONDEO IV,MONDEO IV Stufenheck,MONDEO IV Turnier,S-MAX,VOLVO S80 II,V70 III Kombi,XC60,XC70 II
51630	**Lenker, Radaufhängung, Track Control Arm, Bras de liaison, suspension de roue**
	BMW X3 (E83)
51631	**Lenker, Radaufhängung, Track Control Arm, Bras de liaison, suspension de roue**
	BMW X3 (E83)
51632	**Lenker, Radaufhängung, Track Control Arm, Bras de liaison, suspension de roue**
	BMW 5 (E60),5 Touring (E61),BRILLIANCE BMW 5 SERIES (E60)

51633	**Lenker, Radaufhängung, Track Control Arm, Bras de liaison, suspension de roue**
	BMW 5 (E60),5 Touring (E61),BRILLIANCE BMW 5 SERIES (E60)
51634	**Lenker, Radaufhängung, Track Control Arm, Bras de liaison, suspension de roue**
	BMW 1 Cabriolet (E88),1 Coupe (E82),1 (E81, E87),3 Cabriolet (E93),3 Coupe (E92),3 (E90),3 Touring (E91),BRILLIANCE BMW 3 SERIES (E90)
51635	**Lenker, Radaufhängung, Track Control Arm, Bras de liaison, suspension de roue**
	BMW 1 Cabriolet (E88),1 Coupe (E82),1 (E81, E87),3 Cabriolet (E93),3 Coupe (E92),3 (E90),3 Touring (E91),BRILLIANCE BMW 3 SERIES (E90)
51636	**Lenker, Radaufhängung, Track Control Arm, Bras de liaison, suspension de roue**
	BMW 5 (E60),5 Touring (E61)
51637	**Lenker, Radaufhängung, Track Control Arm, Bras de liaison, suspension de roue**
	BMW 5 (E60),5 Touring (E61)
51638	**Spurstange, Rod Assembly, Barre de connexion**
	BMW 5 (E60),5 Touring (E61),6 Cabriolet (E64),6 (E63)
51639	**Stange/Strebe, Stabilisator, Link Stabiliser, Entretoise/tige, stabilisateur**
	BMW X3 (E83)
51639HPS	**Stange/Strebe, Stabilisator, Link Stabiliser, Entretoise/tige, stabilisateur**
	BMW X3 (E83),3 Coupe (E92)
51640HPS	**Stange/Strebe, Stabilisator, Link Stabiliser, Entretoise/tige, stabilisateur**
	BMW X3 (E83)
51641HPS	**Stange/Strebe, Stabilisator, Link Stabiliser, Entretoise/tige, stabilisateur**
	BMW X3 (E83)
51642HPS	**Stange/Strebe, Stabilisator, Link Stabiliser, Entretoise/tige, stabilisateur**
	BMW 3 (E46),3 Touring (E46)
51643HPS	**Stange/Strebe, Stabilisator, Link Stabiliser, Entretoise/tige, stabilisateur**
	BMW 3 (E46),3 Touring (E46)
51644	**Stange/Strebe, Stabilisator, Link Stabiliser, Entretoise/tige, stabilisateur**
	BMW 5 (E60),5 Touring (E61),BRILLIANCE BMW 5 SERIES (E60)
51645	**Stange/Strebe, Stabilisator, Link Stabiliser, Entretoise/tige, stabilisateur**
	BMW 5 (E60),5 Touring (E61),BRILLIANCE BMW 5 SERIES (E60)
51646	**Stange/Strebe, Stabilisator, Link Stabiliser, Entretoise/tige, stabilisateur**
	BMW 5 (E60),5 Touring (E61),6 Cabriolet (E64),6 (E63)
51647	**Lenker, Radaufhängung, Track Control Arm, Bras de liaison, suspension de roue**
	BMW X5 (E53),Z8,5 (E39),5 (E60),5 Touring (E39),5 Touring (E61),6 Cabriolet (E64),6 (E63),7 (E38),7 (E65, E66)
51648	**Lenker, Radaufhängung, Track Control Arm, Bras de liaison, suspension de roue**
	BMW 1 Cabriolet (E88),1 Coupe (E82),1 (E81, E87),3 Cabriolet (E93),3 Coupe (E92),3 (E90),3 Touring (E91),BRILLIANCE BMW 3 SERIES (E90)
51649	**Lenker, Radaufhängung, Track Control Arm, Bras de liaison, suspension de roue**
	BMW 1 Cabriolet (E88),1 Coupe (E82),1 (E81, E87),3 Cabriolet (E93),3 Coupe (E92),3 (E90),3 Touring (E91),BRILLIANCE BMW 3 SERIES (E90)
51650	**Lenker, Radaufhängung, Track Control Arm, Bras de liaison, suspension de roue**
	BMW 1 Cabriolet (E88),1 Coupe (E82),1 (E81, E87),3 Cabriolet (E93),3 Coupe (E92),3 (E90),3 Touring (E91),BRILLIANCE BMW 3 SERIES (E90)
51651	**Stange/Strebe, Radaufhängung, Link, wheel suspension, Biellette de barre stabilisatrice**
	BMW 1 Cabriolet (E88),1 Coupe (E82),1 (E81, E87),3 (E90),3 Touring (E91)
51652	**Stange/Strebe, Radaufhängung, Link, wheel suspension, Biellette de barre stabilisatrice**
	BMW 1 Cabriolet (E88),1 Coupe (E82),1 (E81, E87),3 Coupe (E92),3 (E90),3 Touring (E91)
51653	**Axialgelenk, Spurstange, Inner Tie Rod, Rotule de direction intérieure, barre de connexion**
	BMW 1 Cabriolet (E88),1 Coupe (E82),1 (E81, E87),3 Cabriolet (E93),3 Coupe (E92),3 (E90),3 Touring (E91)
51654	**Axialgelenk, Spurstange, Inner Tie Rod, Rotule de direction intérieure, barre de connexion**
	BMW 1 (E81, E87),3 Cabriolet (E93),3 Coupe (E92),3 (E90),3 Touring (E91)
51655	**Spurstange, Rod Assembly, Barre de connexion**
	BMW 1 Cabriolet (E88),1 Coupe (E82),1 (E81, E87),3 Cabriolet (E93),3 Coupe (E92),3 (E90),3 Touring (E91)
51656	**Spurstange, Rod Assembly, Barre de connexion**
	BMW 1 Cabriolet (E88),1 Coupe (E82),1 (E81, E87),3 Cabriolet (E93),3 Coupe (E92),3 (E90),3 Touring (E91)
51657	**Stange/Strebe, Stabilisator, Link Stabiliser, Entretoise/tige, stabilisateur**
	BMW 1 (E81, E87),3 Cabriolet (E93),3 Coupe (E92),3 (E90),3 Touring (E91)
51658	**Stange/Strebe, Stabilisator, Link Stabiliser, Entretoise/tige, stabilisateur**
	BMW 1 (E81, E87),3 Cabriolet (E93),3 Coupe (E92),3 (E90),3 Touring (E91)
51659	**Stange/Strebe, Stabilisator, Link Stabiliser, Entretoise/tige, stabilisateur**
	BMW 1 Cabriolet (E88),1 Coupe (E82),1 (E81, E87),3 Cabriolet (E93),3 Coupe (E92),3 (E90),3 Touring (E91)
51660	**Trag-/Führungsgelenk, Ball Joint, Rotule de suspension**
	MINI MINI Cabriolet (R52),MINI (R50, R53)

51661	**Trag-/Führungsgelenk, Ball Joint, Rotule de suspension**
	MINI MINI (R50, R53)
51662	**Trag-/Führungsgelenk, Ball Joint, Rotule de suspension**
	MINI MINI (R50, R53)
51663	**Lenker, Radaufhängung, Track Control Arm, Bras de liaison, suspension de roue**
	MINI MINI Cabriolet (R52),MINI (R50, R53)
51664	**Lenker, Radaufhängung, Track Control Arm, Bras de liaison, suspension de roue**
	MINI MINI Cabriolet (R52),MINI (R50, R53)
51665	**Spurstange, Rod Assembly, Barre de connexion**
	BMW 1 (E81, E87),3 Cabriolet (E93),3 Coupe (E92),3 (E90),3 Touring (E91),6 Cabriolet (E64),6 (E63)
51666	**Spurstange, Rod Assembly, Barre de connexion**
	BMW 1 (E81, E87),3 Cabriolet (E93),3 Coupe (E92),3 (E90),3 Touring (E91)
51667	**Spurstangenkopf, Tie Rod End, Rotule de barre de connexion**
	BMW 1 (E81, E87),3 Cabriolet (E93),3 Coupe (E92),3 (E90),3 Touring (E91)
51668	**Spurstangenkopf, Tie Rod End, Rotule de barre de connexion**
	BMW 1 (E81, E87),3 Cabriolet (E93),3 Coupe (E92),3 (E90),3 Touring (E91)
51681	**Stange/Strebe, Stabilisator, Link Stabiliser, Entretoise/tige, stabilisateur**
	LAND ROVER DISCOVERY III (TAA)
51682	**Stange/Strebe, Stabilisator, Link Stabiliser, Entretoise/tige, stabilisateur**
	LAND ROVER DISCOVERY III (TAA),RANGE ROVER SPORT (LS)
51683	**Spurstangenkopf, Tie Rod End, Rotule de barre de connexion**
	LAND ROVER RANGE ROVER III (LM)
51684	**Spurstangenkopf, Tie Rod End, Rotule de barre de connexion**
	LAND ROVER DISCOVERY III (TAA)
51685	**Trag-/Führungsgelenk, Ball Joint, Rotule de suspension**
	LAND ROVER DISCOVERY III (TAA),RANGE ROVER SPORT (LS)
51686	**Stange/Strebe, Stabilisator, Link Stabiliser, Entretoise/tige, stabilisateur**
	LAND ROVER RANGE ROVER III (LM)
51687	**Lenker, Radaufhängung, Track Control Arm, Bras de liaison, suspension de roue**
	LAND ROVER RANGE ROVER III (LM)
51688	**Trag-/Führungsgelenk, Ball Joint, Rotule de suspension**
	LAND ROVER RANGE ROVER III (LM)
51689	**Spurstangenkopf, Tie Rod End, Rotule de barre de connexion**
	LAND ROVER RANGE ROVER SPORT (LS)
51690	**Lenker, Radaufhängung, Track Control Arm, Bras de liaison, suspension de roue**
	MG MG ZT,MG ZT- T,ROVER 75 (RJ),75 Tourer (RJ)
51691	**Lenker, Radaufhängung, Track Control Arm, Bras de liaison, suspension de roue**
	MG MG ZT,MG ZT- T,ROVER 75 (RJ),75 Tourer (RJ)
51692	**Axialgelenk, Spurstange, Inner Tie Rod, Rotule de direction intérieure, barre de connexion**
	LAND ROVER RANGE ROVER SPORT (LS)
51693	**Stange/Strebe, Stabilisator, Link Stabiliser, Entretoise/tige, stabilisateur**
	LAND ROVER RANGE ROVER SPORT (LS)
51694	**Stange/Strebe, Stabilisator, Link Stabiliser, Entretoise/tige, stabilisateur**
	LAND ROVER RANGE ROVER SPORT (LS)
51710OES	**Lenker, Radaufhängung, Track Control Arm, Bras de liaison, suspension de roue**
	AUDI A4 Avant (8ED),A4 Avant (8E5, B6),A4 Cabriolet (8H7, 8HE),A4 (8EC),A4 (8E2, B6),FAW-AUDI A4 Stufenheck (B6),A4 Stufenheck (B7),SEAT EXEO ST (3R5),EXEO (3R2)
51711	**Spurstangenkopf, Tie Rod End, Rotule de barre de connexion**
	AUDI A3 (8L1),TT Roadster (8N9),TT (8N3),SEAT LEON (1M1),VW GOLF IV (1J1),NEW BEETLE (9C1, 1C1)
51712	**Spurstangenkopf, Tie Rod End, Rotule de barre de connexion**
	AUDI A3 (8L1),TT Roadster (8N9),TT (8N3),SEAT LEON (1M1),VW GOLF IV (1J1),NEW BEETLE (9C1, 1C1)
51713	**Spurstange, Rod Assembly, Barre de connexion**
	AUDI A3 (8L1),TT (8N3)
51714	**Spurstange, Rod Assembly, Barre de connexion**
	AUDI A3 (8L1),TT (8N3)
51715	**Lenker, Radaufhängung, Track Control Arm, Bras de liaison, suspension de roue**
	AUDI A3 Sportback (8PA),A3 (8P1),SEAT ALTEA (5P1),LEON (1P1),TOLEDO III (5P2),SKODA OCTAVIA Combi (1Z5),OCTAVIA (1Z3),VW CADDY III Kasten (2KA, 2KH),CADDY III Kombi (2KB, 2KJ),EOS (1F7),GOLF PLUS (5M1, 521),GOLF V (1K1),JETTA III (1K2),TOURAN (1T1, 1T2)
51716	**Lenker, Radaufhängung, Track Control Arm, Bras de liaison, suspension de roue**
	AUDI A3 Sportback (8PA),A3 (8P1),SEAT ALTEA (5P1),LEON (1P1),TOLEDO III (5P2),SKODA OCTAVIA Combi (1Z5),OCTAVIA (1Z3),VW CADDY III Kasten (2KA, 2KH),CADDY III Kombi (2KB, 2KJ),EOS (1F7),GOLF PLUS (5M1, 521),GOLF V (1K1),JETTA III (1K2),TOURAN (1T1, 1T2)

51718HPS — **Stange/Strebe, Stabilisator, Link Stabiliser, Entretoise/tige, stabilisateur**

VW MULTIVAN T5 (7HM, 7HF),TRANSPORTER T5 Bus (7HB, 7HJ),TRANSPORTER T5 Kasten (7HA, 7HH),TRANSPORTER T5 Pritsche/Fahrgestell (7JD, 7JE, 7JL, 7JY, 7JZ

51719 — **Spurstangenkopf, Tie Rod End, Rotule de barre de connexion**

VW MULTIVAN T5 (7HM, 7HF),TRANSPORTER T5 Bus (7HB, 7HJ),TRANSPORTER T5 Kasten (7HA, 7HH),TRANSPORTER T5 Pritsche/Fahrgestell (7JD, 7JE, 7JL, 7JY, 7JZ

51720 — **Spurstangenkopf, Tie Rod End, Rotule de barre de connexion**

VW MULTIVAN T5 (7HM, 7HF),TRANSPORTER T5 Bus (7HB, 7HJ),TRANSPORTER T5 Kasten (7HA, 7HH),TRANSPORTER T5 Pritsche/Fahrgestell (7JD, 7JE, 7JL, 7JY, 7JZ

51721 — **Trag-/Führungsgelenk, Ball Joint, Rotule de suspension**

VW MULTIVAN T5 (7HM, 7HF),TRANSPORTER T5 Bus (7HB, 7HJ),TRANSPORTER T5 Kasten (7HA, 7HH),TRANSPORTER T5 Pritsche/Fahrgestell (7JD, 7JE, 7JL, 7JY, 7JZ

51722 — **Axialgelenk, Spurstange, Inner Tie Rod, Rotule de direction intérieure, barre de connexion**

VW MULTIVAN T5 (7HM, 7HF),TRANSPORTER T5 Bus (7HB, 7HJ),TRANSPORTER T5 Kasten (7HA, 7HH),TRANSPORTER T5 Pritsche/Fahrgestell (7JD, 7JE, 7JL, 7JY, 7JZ

51723 — **Axialgelenk, Spurstange, Inner Tie Rod, Rotule de direction intérieure, barre de connexion**

AUDI A3 Cabriolet,A3 Sportback (8PA),A3 (8P1),FAW-VW CADDY Kasten,CADDY Kombi,CADDY Stufenheck,MAGOTAN,SAGITAR,SEAT ALTEA XL (5P5),ALTEA (5P1),LEON (1P1),TOLEDO III (5P2),SKODA OCTAVIA Combi (1Z5),OCTAVIA (1Z3),SUPERB Kombi (3T5),SUPERB (3T4),YETI,SVW TOURAN Großraumlimousine,SVW SKODA OCTAVIA,SUPERB,VW CADDY III Kasten (2KA, 2KH),CADDY III Kombi (2KB, 2KJ),EOS (1F7),GOLF PLUS (5M1, 521),GOLF V Variant (1K5),GOLF V (1K1),GOLF VI Variant (AJ5),GOLF VI (5K1),JETTA III (1K2),PASSAT CC,PASSAT Variant (3C5),PASSAT (3C2),SCIROCCO (137),TIGUAN (5N_),TOURAN (1T1, 1T2)

51724 — **Trag-/Führungsgelenk, Ball Joint, Rotule de suspension**

AUDI A3 Cabriolet,A3 Sportback (8PA),A3 (8P1),FAW-VW CADDY Kasten,CADDY Kombi,CADDY Stufenheck,SAGITAR,SEAT ALTEA XL (5P5),ALTEA (5P1),LEON (1P1),TOLEDO III (5P2),SKODA OCTAVIA Combi (1Z5),OCTAVIA (1Z3),PRAKTIK,SUPERB Kombi (3T5),SUPERB (3T4),YETI,SVW TOURAN Großraumlimousine,SVW SKODA OCTAVIA,SUPERB,VW CADDY III Kasten (2KA, 2KH),CADDY III Kombi (2KB, 2KJ),EOS (1F7),GOLF PLUS (5M1, 521),GOLF V Variant (1K5),GOLF V (1K1),GOLF VI Variant (AJ5),GOLF VI (5K1),JETTA III (1K2),SCIROCCO (137),TIGUAN (5N_),TOURAN (1T1, 1T2)

51725 — **Trag-/Führungsgelenk, Ball Joint, Rotule de suspension**

AUDI A3 Cabriolet,A3 Sportback (8PA),A3 (8P1),FAW-VW CADDY Kasten,CADDY Kombi,CADDY Stufenheck,SAGITAR,SEAT ALTEA XL (5P5),ALTEA (5P1),LEON (1P1),TOLEDO III (5P2),SKODA OCTAVIA Combi (1Z5),OCTAVIA (1Z3),PRAKTIK,SUPERB Kombi (3T5),SUPERB (3T4),YETI,SVW TOURAN Großraumlimousine,SVW SKODA OCTAVIA,SUPERB,VW CADDY III Kasten (2KA, 2KH),CADDY III Kombi (2KB, 2KJ),EOS (1F7),GOLF PLUS (5M1, 521),GOLF V Variant (1K5),GOLF V (1K1),GOLF VI Variant (AJ5),GOLF VI (5K1),JETTA III (1K2),SCIROCCO (137),TIGUAN (5N_),TOURAN (1T1, 1T2)

51726 — **Lenker, Radaufhängung, Track Control Arm, Bras de liaison, suspension de roue**

AUDI A3 Sportback (8PA),A3 (8P1),SEAT ALTEA XL (5P5),ALTEA (5P1),LEON (1P1),TOLEDO III (5P2),SKODA OCTAVIA Combi (1Z5),OCTAVIA (1Z3),VW EOS (1F7),GOLF PLUS (5M1, 521),GOLF V (1K1),JETTA III (1K2),TOURAN (1T1, 1T2)

51727 — **Lenker, Radaufhängung, Track Control Arm, Bras de liaison, suspension de roue**

AUDI A3 Sportback (8PA),A3 (8P1),SEAT ALTEA XL (5P5),ALTEA (5P1),LEON (1P1),TOLEDO III (5P2),SKODA OCTAVIA Combi (1Z5),OCTAVIA (1Z3),VW EOS (1F7),GOLF PLUS (5M1, 521),GOLF V (1K1),JETTA III (1K2),TOURAN (1T1, 1T2)

51730 — **Lenker, Radaufhängung, Track Control Arm, Bras de liaison, suspension de roue**

AUDI A6 Avant (4B, C5),A6 (4B, C5),A8 (4D2, 4D8),SKODA SUPERB (3U4),VW PASSAT Variant (3B6),PASSAT (3B3)

51731 — **Lenker, Radaufhängung, Track Control Arm, Bras de liaison, suspension de roue**

VW MULTIVAN T5 (7HM, 7HF),TRANSPORTER T5 Bus (7HB, 7HJ),TRANSPORTER T5 Kasten (7HA, 7HH),TRANSPORTER T5 Pritsche/Fahrgestell (7JD, 7JE, 7JL, 7JY, 7JZ

51732 — **Lenker, Radaufhängung, Track Control Arm, Bras de liaison, suspension de roue**

VW MULTIVAN T5 (7HM, 7HF),TRANSPORTER T5 Bus (7HB, 7HJ),TRANSPORTER T5 Kasten (7HA, 7HH),TRANSPORTER T5 Pritsche/Fahrgestell (7JD, 7JE, 7JL, 7JY, 7JZ

51733 — **Stange/Strebe, Stabilisator, Link Stabiliser, Entretoise/tige, stabilisateur**

AUDI Q7 (4L),PORSCHE CAYENNE (955),VW TOUAREG (7LA, 7L6, 7L7)

51734 — **Stange/Strebe, Stabilisator, Link Stabiliser, Entretoise/tige, stabilisateur**

AUDI Q7 (4L),PORSCHE CAYENNE (955),VW TOUAREG (7LA, 7L6, 7L7)

51735 — **Spurstangenkopf, Tie Rod End, Rotule de barre de connexion**

AUDI A8 (4E_),VW PHAETON (3D2)

51736 — **Axialgelenk, Spurstange, Inner Tie Rod, Rotule de direction intérieure, barre de connexion**

AUDI A8 (4E_),VW PHAETON (3D2)

51737 — **Lenker, Radaufhängung, Track Control Arm, Bras de liaison, suspension de roue**

AUDI A8 (4E_),VW PHAETON (3D2)

51738 — **Lenker, Radaufhängung, Track Control Arm, Bras de liaison, suspension de roue**

AUDI A8 (4E_),VW PHAETON (3D2)

51739 — **Lenker, Radaufhängung, Track Control Arm, Bras de liaison, suspension de roue**

AUDI A8 (4E_),VW PHAETON (3D2)

51740 — **Spurstangenkopf, Tie Rod End, Rotule de barre de connexion**

AUDI A3 Sportback (8PA),A3 (8P1),FAW-VW CADDY Kasten,CADDY Kombi,CADDY Stufenheck,MAGOTAN,SEAT ALTEA XL (5P5),ALTEA (5P1),LEON (1P1),TOLEDO III (5P2),SKODA OCTAVIA Combi (1Z5),OCTAVIA (1Z3),SUPERB Kombi (3T5),SUPERB (3T4),YETI,SVW TOURAN Großraumlimousine,SVW SKODA OCTAVIA,SUPERB,VW CADDY III Kasten (2KA, 2KH),CADDY III Kombi (2KB, 2KJ),EOS (1F7),GOLF PLUS (5M1, 521),GOLF V (1K1),JETTA III (1K2),PASSAT CC,PASSAT Variant (3C5),PASSAT (3C2),TIGUAN (5N_),TOURAN (1T1, 1T2)

51741 — **Spurstangenkopf, Tie Rod End, Rotule de barre de connexion**

AUDI A3 Sportback (8PA),A3 (8P1),FAW-VW CADDY Kasten,CADDY Kombi,CADDY Stufenheck,MAGOTAN,SEAT ALTEA XL (5P5),ALTEA (5P1),LEON (1P1),TOLEDO III (5P2),SKODA OCTAVIA Combi (1Z5),OCTAVIA (1Z3),SUPERB Kombi (3T5),SUPERB (3T4),YETI,SVW TOURAN Großraumlimousine,SVW SKODA OCTAVIA,SUPERB,VW CADDY III Kasten (2KA, 2KH),CADDY III Kombi (2KB, 2KJ),EOS (1F7),GOLF PLUS (5M1, 521),GOLF V (1K1),JETTA III (1K2),PASSAT CC,PASSAT Variant (3C5),PASSAT (3C2),TIGUAN (5N_),TOURAN (1T1, 1T2)

51742	**Spurstangenkopf, Tie Rod End, Rotule de barre de connexion**
	AUDI Q7 (4L),PORSCHE CAYENNE (955),VW TOUAREG (7LA, 7L6, 7L7)
51743	**Spurstangenkopf, Tie Rod End, Rotule de barre de connexion**
	AUDI Q7 (4L),PORSCHE CAYENNE (955),VW TOUAREG (7LA, 7L6, 7L7)
51744	**Axialgelenk, Spurstange, Inner Tie Rod, Rotule de direction intérieure, barre de connexion**
	AUDI Q7 (4L),PORSCHE CAYENNE (955),VW TOUAREG (7LA, 7L6, 7L7)
51745	**Spurstange, Rod Assembly, Barre de connexion**
	AUDI Q7 (4L),PORSCHE CAYENNE (955),VW TOUAREG (7LA, 7L6, 7L7)
51746	**Spurstange, Rod Assembly, Barre de connexion**
	AUDI Q7 (4L),PORSCHE CAYENNE (955),VW TOUAREG (7LA, 7L6, 7L7)
51800	**Trag-/Führungsgelenk, Ball Joint, Rotule de suspension**
	VW KAEFER,KARMANN GHIA Cabriolet (14, 34),KARMANN GHIA Coupe (14, 34)
51801	**Trag-/Führungsgelenk, Ball Joint, Rotule de suspension**
	VW KAEFER,KARMANN GHIA Cabriolet (14, 34),KARMANN GHIA Coupe (14, 34)
51802	**Spurstangenkopf, Tie Rod End, Rotule de barre de connexion**
	VW LT 28-35 I Bus (281-363),LT 28-35 I Kasten (281-363),LT 28-35 I Pritsche/Fahrgestell (281-363),LT 40-55 I Kasten (291-512),LT 40-55 I Pritsche/Fahrgestell (293-909)
51803	**Spurstangenkopf, Tie Rod End, Rotule de barre de connexion**
	VW LT 28-35 I Bus (281-363),LT 28-35 I Kasten (281-363),LT 28-35 I Pritsche/Fahrgestell (281-363)
51805	**Spurstange, Rod Assembly, Barre de connexion**
	VW LT 28-35 I Bus (281-363),LT 28-35 I Kasten (281-363),LT 28-35 I Pritsche/Fahrgestell (281-363),LT 28-35 II Bus (2DM),LT 28-46 II Kasten (2DX0AE),LT 28-46 II Pritsche/Fahrgestell (2DX0FE),LT 40-55 I Kasten (291-512),LT 40-55 I Pritsche/Fahrgestell (293-909)
51806	**Spurstange, Rod Assembly, Barre de connexion**
	VW LT 28-35 I Bus (281-363),LT 28-35 I Kasten (281-363),LT 28-35 I Pritsche/Fahrgestell (281-363),LT 40-55 I Kasten (291-512),LT 40-55 I Pritsche/Fahrgestell (293-909),TRANSPORTER T1 Bus (22, 24, 25, 28),TRANSPORTER T1 Kasten (21, 23),TRANSPORTER T1 Pritsche/Fahrgestell (26),TRANSPORTER T2 Bus,TRANSPORTER T2 Kasten,TRANSPORTER T2 Pritsche/Fahrgestell
51807	**Spurstangenkopf, Tie Rod End, Rotule de barre de connexion**
	VW KAEFER,KAEFER Cabriolet (15),KARMANN GHIA Cabriolet (14, 34),KARMANN GHIA Coupe (14, 34),1500,1600 Schrägheck (31),1500,1600 Variant (36),1500,1600 (31)
51810	**Spurstangenkopf, Tie Rod End, Rotule de barre de connexion**
	VW KAEFER,KAEFER Cabriolet (15),KARMANN GHIA Cabriolet (14, 34),KARMANN GHIA Coupe (14, 34)
51811	**Reparatursatz, Radaufhängung, Repair Kit, wheel suspension, Kit de réparation, suspension de roue**
	VW TRANSPORTER T4 Bus (70XB, 70XC, 7DB, 7DW),TRANSPORTER T4 Kasten (70XA),TRANSPORTER T4 Pritsche/Fahrgestell (70XD)
51812	**Reparatursatz, Radaufhängung, Repair Kit, wheel suspension, Kit de réparation, suspension de roue**
	VW TRANSPORTER T4 Bus (70XB, 70XC, 7DB, 7DW),TRANSPORTER T4 Kasten (70XA),TRANSPORTER T4 Pritsche/Fahrgestell (70XD)
51813	**Reparatursatz, Radaufhängung, Repair Kit, wheel suspension, Kit de réparation, suspension de roue**
	VW TRANSPORTER T4 Bus (70XB, 70XC, 7DB, 7DW),TRANSPORTER T4 Kasten (70XA),TRANSPORTER T4 Pritsche/Fahrgestell (70XD)
51814	**Reparatursatz, Radaufhängung, Repair Kit, wheel suspension, Kit de réparation, suspension de roue**
	VW TRANSPORTER T4 Bus (70XB, 70XC, 7DB, 7DW),TRANSPORTER T4 Kasten (70XA),TRANSPORTER T4 Pritsche/Fahrgestell (70XD)
51815	**Reparatursatz, Radaufhängung, Repair Kit, wheel suspension, Kit de réparation, suspension de roue**
	VW TRANSPORTER T4 Bus (70XB, 70XC, 7DB, 7DW),TRANSPORTER T4 Kasten (70XA),TRANSPORTER T4 Pritsche/Fahrgestell (70XD)
51816	**Reparatursatz, Radaufhängung, Repair Kit, wheel suspension, Kit de réparation, suspension de roue**
	VW TRANSPORTER T4 Bus (70XB, 70XC, 7DB, 7DW),TRANSPORTER T4 Kasten (70XA),TRANSPORTER T4 Pritsche/Fahrgestell (70XD)
51817	**Reparatursatz, Radaufhängung, Repair Kit, wheel suspension, Kit de réparation, suspension de roue**
	VW TRANSPORTER T4 Bus (70XB, 70XC, 7DB, 7DW),TRANSPORTER T4 Kasten (70XA),TRANSPORTER T4 Pritsche/Fahrgestell (70XD)
51818	**Reparatursatz, Radaufhängung, Repair Kit, wheel suspension, Kit de réparation, suspension de roue**
	VW TRANSPORTER T4 Bus (70XB, 70XC, 7DB, 7DW),TRANSPORTER T4 Kasten (70XA),TRANSPORTER T4 Pritsche/Fahrgestell (70XD)
51819	**Lenker, Radaufhängung, Track Control Arm, Bras de liaison, suspension de roue**
	SEAT AROSA (6H),VW LUPO (6X1, 6E1)
51819/1	**Lenker, Radaufhängung, Track Control Arm, Bras de liaison, suspension de roue**
	SEAT AROSA (6H),VW LUPO (6X1, 6E1),POLO (6N2)
51820	**Lenker, Radaufhängung, Track Control Arm, Bras de liaison, suspension de roue**
	SEAT AROSA (6H),VW LUPO (6X1, 6E1)
51821	**Stange/Strebe, Stabilisator, Link Stabiliser, Entretoise/tige, stabilisateur**
	VW LUPO (6X1, 6E1),POLO Kasten (6NF),POLO (6N1),POLO (6N2)
51822	**Spurstangenkopf, Tie Rod End, Rotule de barre de connexion**
	SEAT AROSA (6H),VW LUPO (6X1, 6E1),POLO CLASSIC (6KV2),POLO Kasten (6NF),POLO Kasten (86CF),POLO Variant (6KV5),POLO (6N1),POLO (6N2),POLO (9N_)
51823	**Spurstangenkopf, Tie Rod End, Rotule de barre de connexion**
	SEAT AROSA (6H),VW LUPO (6X1, 6E1),POLO CLASSIC (6KV2),POLO Kasten (6NF),POLO Kasten (86CF),POLO Variant (6KV5),POLO (6N1),POLO (6N2),POLO (9N_)
51824	**Stange/Strebe, Stabilisator, Link Stabiliser, Entretoise/tige, stabilisateur**
	VW TOUAREG (7LA, 7L6, 7L7)

51825HPS

Stange/Strebe, Stabilisator, Link Stabiliser, Entretoise/tige, stabilisateur

AUDI A3 Cabriolet,A3 Sportback (8PA),A3 (8P1),TT Roadster (8J9),TT (8J3),FAW-VW CADDY Kasten,CADDY Kombi,CADDY Stufenheck,MAGOTAN,SAGITAR,SEAT ALTEA XL (5P5),ALTEA (5P1),LEON (1P1),TOLEDO III (5P2),SKODA OCTAVIA Combi (1Z5),OCTAVIA (1Z3),SUPERB Kombi (3T5),SUPERB (3T4),YETI,SVW TOURAN Großraumlimousine,SVW SKODA OCTAVIA,SUPERB,VW CADDY III Kasten (2KA, 2KH),CADDY III Kombi (2KB, 2KJ),EOS (1F7),GOLF PLUS (5M1, 521),GOLF V Variant (1K5),GOLF V (1K1),GOLF VI Variant (AJ5),GOLF VI (5K1),JETTA III (1K2),PASSAT CC,PASSAT Variant (3C5),PASSAT (3C2),SCIROCCO (137),TIGUAN (5N_),TOURAN (1T1, 1T2)

51826

Spurstangenkopf, Tie Rod End, Rotule de barre de connexion

AUDI A3 Sportback (8PA),A3 (8P1),SEAT ALTEA (5P1),LEON (1P1),TOLEDO III (5P2),SKODA OCTAVIA Combi (1Z5),OCTAVIA (1Z3),VW CADDY III Kasten (2KA, 2KH),CADDY III Kombi (2KB, 2KJ),EOS (1F7),GOLF PLUS (5M1, 521),GOLF V (1K1),JETTA III (1K2),PASSAT (3C2),TOURAN (1T1, 1T2)

51827

Spurstangenkopf, Tie Rod End, Rotule de barre de connexion

AUDI A3 Sportback (8PA),A3 (8P1),SEAT ALTEA (5P1),LEON (1P1),TOLEDO III (5P2),SKODA OCTAVIA Combi (1Z5),OCTAVIA (1Z3),VW CADDY III Kasten (2KA, 2KH),CADDY III Kombi (2KB, 2KJ),EOS (1F7),GOLF PLUS (5M1, 521),GOLF V (1K1),JETTA III (1K2),PASSAT (3C2),TOURAN (1T1, 1T2)

51829HPS

Stange/Strebe, Stabilisator, Link Stabiliser, Entretoise/tige, stabilisateur

AUDI A3 Cabriolet,A3 Sportback (8PA),A3 (8P1),TT Roadster (8J9),TT (8J3),SEAT ALTEA XL (5P5),ALTEA (5P1),LEON (1P1),TOLEDO II (1M2),TOLEDO III (5P2),SKODA OCTAVIA Combi (1Z5),OCTAVIA (1Z3),SUPERB Kombi (3T5),SUPERB (3T4),YETI,VW EOS (1F7),GOLF PLUS (5M1, 521),GOLF V Variant (1K5),GOLF V (1K1),GOLF VI Variant (AJ5),GOLF VI (5K1),JETTA III (1K2),PASSAT CC,PASSAT Variant (3C5),PASSAT (3C2),SCIROCCO (137),SHARAN,TIGUAN (5N_),TOURAN (1T1, 1T2)

51830

Lenker, Radaufhängung, Track Control Arm, Bras de liaison, suspension de roue

MERCEDES-BENZ S-KLASSE Coupe (C215),S-KLASSE (W220)

51831

Lenker, Radaufhängung, Track Control Arm, Bras de liaison, suspension de roue

MERCEDES-BENZ S-KLASSE Coupe (C215),S-KLASSE (W220)

51832

Lenker, Radaufhängung, Track Control Arm, Bras de liaison, suspension de roue

MERCEDES-BENZ S-KLASSE Coupe (C215),S-KLASSE (W220)

51833

Lenker, Radaufhängung, Track Control Arm, Bras de liaison, suspension de roue

MERCEDES-BENZ S-KLASSE Coupe (C215),S-KLASSE (W220)

51834

Trag-/Führungsgelenk, Ball Joint, Rotule de suspension

MERCEDES-BENZ S-KLASSE Coupe (C215),S-KLASSE (W220),SL (R230)

51835

Lenker, Radaufhängung, Track Control Arm, Bras de liaison, suspension de roue

MERCEDES-BENZ CLS (C219),E-KLASSE Kombi (S211),E-KLASSE (W211),SL (R230)

51836

Lenker, Radaufhängung, Track Control Arm, Bras de liaison, suspension de roue

MERCEDES-BENZ CLS (C219),E-KLASSE Kombi (S211),E-KLASSE (W211),SL (R230)

51837

Lenker, Radaufhängung, Track Control Arm, Bras de liaison, suspension de roue

MERCEDES-BENZ CLS (C219),E-KLASSE Kombi (S211),E-KLASSE (W211),SL (R230)

51838

Lenker, Radaufhängung, Track Control Arm, Bras de liaison, suspension de roue

MERCEDES-BENZ CLS (C219),E-KLASSE Kombi (S211),E-KLASSE (W211),SL (R230)

51839

Axialgelenk, Spurstange, Inner Tie Rod, Rotule de direction intérieure, barre de connexion

MERCEDES-BENZ E-KLASSE Kombi (S211),E-KLASSE (W211)

51840

Spurstangenkopf, Tie Rod End, Rotule de barre de connexion

MERCEDES-BENZ E-KLASSE Kombi (S211),E-KLASSE (W211)

51841

Spurstangenkopf, Tie Rod End, Rotule de barre de connexion

MERCEDES-BENZ E-KLASSE Kombi (S211),E-KLASSE (W211)

51842

Lenker, Radaufhängung, Track Control Arm, Bras de liaison, suspension de roue

MERCEDES-BENZ M-KLASSE (W163)

51843

Lenker, Radaufhängung, Track Control Arm, Bras de liaison, suspension de roue

MERCEDES-BENZ M-KLASSE (W163)

51844

Stange/Strebe, Stabilisator, Link Stabiliser, Entretoise/tige, stabilisateur

MERCEDES-BENZ M-KLASSE (W163)

51845

Stange/Strebe, Stabilisator, Link Stabiliser, Entretoise/tige, stabilisateur

MERCEDES-BENZ M-KLASSE (W163)

51847

Trag-/Führungsgelenk, Ball Joint, Rotule de suspension

MERCEDES-BENZ CLS (C219),E-KLASSE Kombi (S211),E-KLASSE (W211),S-KLASSE (W220),SL (R230)

51848

Trag-/Führungsgelenk, Ball Joint, Rotule de suspension

MERCEDES-BENZ A-KLASSE (W169),B-KLASSE (W245)

51850

Spurstangenkopf, Tie Rod End, Rotule de barre de connexion

MERCEDES-BENZ CABRIOLET (W111),COUPE (C123),COUPE (W111),HECKFLOSSE (W110),HECKFLOSSE (W111),KOMBI Kombi (S123),PAGODE (W113),PONTON (W120),PONTON (W121),PONTON (W128),PONTON (W180),S-KLASSE Coupe (C126),S-KLASSE Stufenheck (W108, W109),S-KLASSE (W116),S-KLASSE (W126),SL Coupe (C107),SL (R107),SL (W121),Stufenheck (W123),/8 Coupe (W114),/8 (W114),/8 (W115)

51851

Stange/Strebe, Stabilisator, Link Stabiliser, Entretoise/tige, stabilisateur

MERCEDES-BENZ C-KLASSE Kombi (S203),C-KLASSE Sportcoupe (CL203),C-KLASSE (W203)

51852

Lenker, Radaufhängung, Track Control Arm, Bras de liaison, suspension de roue

MERCEDES-BENZ CLS (C219),E-KLASSE Kombi (S211),E-KLASSE (W211)

51853 **Lenker, Radaufhängung, Track Control Arm, Bras de liaison, suspension de roue**

MERCEDES-BENZ CLS (C219),E-KLASSE Kombi (S211),E-KLASSE (W211)

51854 **Lenker, Radaufhängung, Track Control Arm, Bras de liaison, suspension de roue**

MERCEDES-BENZ M-KLASSE (W163)

51855 **Lenker, Radaufhängung, Track Control Arm, Bras de liaison, suspension de roue**

MERCEDES-BENZ M-KLASSE (W163)

51856 **Stange/Strebe, Radaufhängung, Link, wheel suspension, Biellette de barre stabilisatrice**

MERCEDES-BENZ CLS (C219),E-KLASSE Kombi (S211),E-KLASSE (W211),SL (R230)

51857 **Stange/Strebe, Radaufhängung, Link, wheel suspension, Biellette de barre stabilisatrice**

MERCEDES-BENZ CLS (C219),E-KLASSE Kombi (S211),E-KLASSE (W211),SL (R230)

51858 **Stange/Strebe, Radaufhängung, Link, wheel suspension, Biellette de barre stabilisatrice**

MERCEDES-BENZ CLS (C219),E-KLASSE Kombi (S211),E-KLASSE (W211),SL (R230)

51859 **Stange/Strebe, Radaufhängung, Link, wheel suspension, Biellette de barre stabilisatrice**

MERCEDES-BENZ CLS (C219),E-KLASSE Kombi (S211),E-KLASSE (W211),SL (R230)

51860 **Stange/Strebe, Radaufhängung, Link, wheel suspension, Biellette de barre stabilisatrice**

MERCEDES-BENZ S-KLASSE (W221)

51860/1 **Stange/Strebe, Radaufhängung, Link, wheel suspension, Biellette de barre stabilisatrice**

MERCEDES-BENZ S-KLASSE (W221)

51861 **Stange/Strebe, Stabilisator, Link Stabiliser, Entretoise/tige, stabilisateur**

SEAT CORDOBA Schrägheck (6K2),CORDOBA Vario (6K5),CORDOBA (6K2/C2),IBIZA II (6K1),IBIZA III (6K1),INCA (6K9),TOLEDO I (1L),VW CADDY II Kasten (9K9A),POLO CLASSIC (6KV2),POLO Variant (6KV5)

51862 **Stange/Strebe, Stabilisator, Link Stabiliser, Entretoise/tige, stabilisateur**

SEAT CORDOBA Vario (6K5),CORDOBA (6K2/C2),IBIZA II (6K1),INCA (6K9),TOLEDO I (1L),VW CADDY II Kasten (9K9A),CADDY II Kombi (9K9B),CORRADO (53I),GOLF II (19E, 1G1),POLO CLASSIC (6KV2),POLO Variant (6KV5)

51870 **Lenker, Radaufhängung, Track Control Arm, Bras de liaison, suspension de roue**

AUDI A6 Avant (4A, C4),A6 (4A, C4),V8 (44_, 4C_),100 Avant (4A, C4),100 Avant (44, 44Q, C3),100 (4A, C4),100 (44, 44Q, C3),200 Avant (44, 44Q),200 (44, 44Q)

51871 **Lenker, Radaufhängung, Track Control Arm, Bras de liaison, suspension de roue**

AUDI A6 Avant (4A, C4),A6 (4A, C4),V8 (44_, 4C_),100 Avant (4A, C4),100 Avant (44, 44Q, C3),100 (4A, C4),100 (44, 44Q, C3),200 Avant (44, 44Q),200 (44, 44Q)

51872 **Lenker, Radaufhängung, Track Control Arm, Bras de liaison, suspension de roue**

AUDI A4 Avant (8ED),A4 (8EC),SEAT EXEO ST (3R5),EXEO (3R2)

51873 **Lenker, Radaufhängung, Track Control Arm, Bras de liaison, suspension de roue**

AUDI A4 Avant (8ED),A4 (8EC),SEAT EXEO ST (3R5),EXEO (3R2)

51874 **Lenker, Radaufhängung, Track Control Arm, Bras de liaison, suspension de roue**

AUDI A6 Allroad (4FH),A6 Avant (4F5),A6 (4F2)

51875 **Lenker, Radaufhängung, Track Control Arm, Bras de liaison, suspension de roue**

AUDI A6 Avant (4F5),A6 (4F2)

51876 **Lenker, Radaufhängung, Track Control Arm, Bras de liaison, suspension de roue**

AUDI A6 Allroad (4FH),A6 Avant (4F5),A6 (4F2),A8 (4E_),FAW-AUDI A6L Stufenheck (C6),VW PHAETON (3D2)

51877 **Lenker, Radaufhängung, Track Control Arm, Bras de liaison, suspension de roue**

AUDI A6 Allroad (4FH),A6 Avant (4F5),A6 (4F2),A8 (4E_),FAW-AUDI A6L Stufenheck (C6),VW PHAETON (3D2)

51878 **Lenker, Radaufhängung, Track Control Arm, Bras de liaison, suspension de roue**

AUDI A6 Allroad (4FH),A6 Avant (4F5),A6 (4F2),A8 (4E_),FAW-AUDI A6L Stufenheck (C6),VW PHAETON (3D2)

51879 **Lenker, Radaufhängung, Track Control Arm, Bras de liaison, suspension de roue**

AUDI A6 Allroad (4FH),A6 Avant (4F5),A6 (4F2),A8 (4D2, 4D8),A8 (4E_),FAW-AUDI A6L Stufenheck (C6),VW PHAETON (3D2)

51880 **Stange/Strebe, Radaufhängung, Link, wheel suspension, Biellette de barre stabilisatrice**

MERCEDES-BENZ S-KLASSE (W221)

51881 **Stange/Strebe, Radaufhängung, Link, wheel suspension, Biellette de barre stabilisatrice**

MERCEDES-BENZ S-KLASSE (W221)

51882 **Trag-/Führungsgelenk, Ball Joint, Rotule de suspension**

MERCEDES-BENZ CLS (C219),E-KLASSE Kombi (S211),E-KLASSE (W211)

52710 **Lenker, Radaufhängung, Track Control Arm, Bras de liaison, suspension de roue**

AUDI A6 Allroad (4FH),A6 Avant (4F5),A6 (4F2),FAW-AUDI A6L Stufenheck (C6)

52711 **Stange/Strebe, Stabilisator, Link Stabiliser, Entretoise/tige, stabilisateur**

AUDI A6 Allroad (4FH),A6 Avant (4F5),A6 (4F2),A8 (4D2, 4D8),A8 (4E_),FAW-AUDI A6L Stufenheck (C6),VW PHAETON (3D2)

52712 **Stange/Strebe, Stabilisator, Link Stabiliser, Entretoise/tige, stabilisateur**

AUDI A4 Avant (8ED),A4 Avant (8E5, B6),A4 Cabriolet (8H7, 8HE),A4 (8EC),A4 (8E2, B6),SEAT EXEO ST (3R5),EXEO (3R2)

52713 **Stange/Strebe, Stabilisator, Link Stabiliser, Entretoise/tige, stabilisateur**

AUDI A4 Avant (8ED),A4 Avant (8E5, B6),A4 Cabriolet (8H7, 8HE),A4 (8EC),A4 (8E2, B6),FAW-AUDI A4 Stufenheck (B7),SEAT EXEO ST (3R5),EXEO (3R2)

52714	**Lenker, Radaufhängung, Track Control Arm, Bras de liaison, suspension de roue**
	AUDI Q7 (4L),PORSCHE CAYENNE (955),VW TOUAREG (7LA, 7L6, 7L7)
52715	**Lenker, Radaufhängung, Track Control Arm, Bras de liaison, suspension de roue**
	AUDI Q7 (4L),PORSCHE CAYENNE (955),VW TOUAREG (7LA, 7L6, 7L7)
52716	**Lenker, Radaufhängung, Track Control Arm, Bras de liaison, suspension de roue**
	AUDI Q7 (4L),PORSCHE CAYENNE (955),VW TOUAREG (7LA, 7L6, 7L7)
52717	**Lenker, Radaufhängung, Track Control Arm, Bras de liaison, suspension de roue**
	VW PASSAT Variant (3C5),PASSAT (3C2),TIGUAN (5N_)
52718	**Lenker, Radaufhängung, Track Control Arm, Bras de liaison, suspension de roue**
	AUDI A3 Sportback (8PA),A3 (8P1),TT Roadster (8J9),TT (8J3),SEAT ALTEA (5P1),LEON (1P1),TOLEDO III (5P2),SKODA OCTAVIA Combi (1Z5),OCTAVIA (1Z3),VW GOLF PLUS (5M1, 521),GOLF V (1K1),JETTA III (1K2),PASSAT Variant (3C5),PASSAT (3C2),TOURAN (1T1, 1T2)
52719	**Axialgelenk, Spurstange, Inner Tie Rod, Rotule de direction intérieure, barre de connexion**
	VW GOLF III Cabriolet (1E7),GOLF III Variant (1H5),GOLF III (1H1),VENTO (1H2)
52780	**Lenker, Radaufhängung, Track Control Arm, Bras de liaison, suspension de roue**
	PORSCHE BOXSTER (986),911 Cabriolet (996),911 Targa (996),911 (996)
52800	**Stange/Strebe, Stabilisator, Link Stabiliser, Entretoise/tige, stabilisateur**
	MERCEDES-BENZ VITO Bus (638),VITO Kasten (638),V-KLASSE (638/2)
52801	**Stange/Strebe, Stabilisator, Link Stabiliser, Entretoise/tige, stabilisateur**
	MERCEDES-BENZ VITO Bus (638),VITO Kasten (638),V-KLASSE (638/2)
52802	**Stange/Strebe, Stabilisator, Link Stabiliser, Entretoise/tige, stabilisateur**
	MERCEDES-BENZ SPRINTER (905)
52803	**Stange/Strebe, Stabilisator, Link Stabiliser, Entretoise/tige, stabilisateur**
	MERCEDES-BENZ SPRINTER (905)
52804HPS	**Stange/Strebe, Stabilisator, Link Stabiliser, Entretoise/tige, stabilisateur**
	MERCEDES-BENZ VIANO (W639),VITO Bus (W639),VITO Kasten (W639)
52805HPS	**Stange/Strebe, Stabilisator, Link Stabiliser, Entretoise/tige, stabilisateur**
	MERCEDES-BENZ VIANO (W639),VITO Bus (W639),VITO Kasten (W639)
52806HPS	**Stange/Strebe, Stabilisator, Link Stabiliser, Entretoise/tige, stabilisateur**
	MERCEDES-BENZ A-KLASSE (W169),B-KLASSE (W245)
52807	**Lenker, Radaufhängung, Track Control Arm, Bras de liaison, suspension de roue**
	MERCEDES-BENZ GL-KLASSE (X164),M-KLASSE (W164),R-KLASSE (W251, V251)
52808	**Lenker, Radaufhängung, Track Control Arm, Bras de liaison, suspension de roue**
	MERCEDES-BENZ GL-KLASSE (X164),M-KLASSE (W164),R-KLASSE (W251, V251)
52809	**Spurstangenkopf, Tie Rod End, Rotule de barre de connexion**
	MERCEDES-BENZ SPRINTER 3-t Bus (906),SPRINTER 3-t Kasten (906),SPRINTER 3-t Pritsche/Fahrgestell (906),SPRINTER 3,5 Pritsche/Fahrgestell (906),SPRINTER 3,5-t Bus (906),SPRINTER 3,5-t Kasten (906),SPRINTER 5-t Kasten (906),SPRINTER 5-t Pritsche/Fahrgestell (906),VW CRAFTER 30-35 Bus (2E),CRAFTER 30-50 Kasten (2E),CRAFTER 30-50 Pritsche/Fahrgestell (2E)
52810	**Axialgelenk, Spurstange, Inner Tie Rod, Rotule de direction intérieure, barre de connexion**
	MERCEDES-BENZ SPRINTER 3-t Bus (906),SPRINTER 3-t Kasten (906),SPRINTER 3-t Pritsche/Fahrgestell (906),SPRINTER 3,5 Pritsche/Fahrgestell (906),SPRINTER 3,5-t Bus (906),SPRINTER 3,5-t Kasten (906),SPRINTER 5-t Kasten (906),SPRINTER 5-t Pritsche/Fahrgestell (906),VW CRAFTER 30-35 Bus (2E),CRAFTER 30-50 Kasten (2E),CRAFTER 30-50 Pritsche/Fahrgestell (2E)
52811	**Spurstange, Rod Assembly, Barre de connexion**
	MERCEDES-BENZ SPRINTER 3-t Bus (906),SPRINTER 3-t Kasten (906),SPRINTER 3-t Pritsche/Fahrgestell (906),SPRINTER 3,5 Pritsche/Fahrgestell (906),SPRINTER 3,5-t Bus (906),SPRINTER 3,5-t Kasten (906),SPRINTER 5-t Kasten (906),SPRINTER 5-t Pritsche/Fahrgestell (906),VW CRAFTER 30-35 Bus (2E),CRAFTER 30-50 Kasten (2E),CRAFTER 30-50 Pritsche/Fahrgestell (2E)
52812	**Trag-/Führungsgelenk, Ball Joint, Rotule de suspension**
	MERCEDES-BENZ SPRINTER 3-t Bus (906),SPRINTER 3-t Kasten (906),SPRINTER 3-t Pritsche/Fahrgestell (906),SPRINTER 3,5 Pritsche/Fahrgestell (906),SPRINTER 3,5-t Bus (906),SPRINTER 3,5-t Kasten (906),SPRINTER 5-t Kasten (906),SPRINTER 5-t Pritsche/Fahrgestell (906),VW CRAFTER 30-35 Bus (2E),CRAFTER 30-50 Kasten (2E),CRAFTER 30-50 Pritsche/Fahrgestell (2E)
52813	**Stange/Strebe, Stabilisator, Link Stabiliser, Entretoise/tige, stabilisateur**
	MERCEDES-BENZ SPRINTER 3-t Bus (906),SPRINTER 3-t Kasten (906),SPRINTER 3-t Pritsche/Fahrgestell (906),SPRINTER 3,5 Pritsche/Fahrgestell (906),SPRINTER 3,5-t Bus (906),SPRINTER 3,5-t Kasten (906),SPRINTER 5-t Kasten (906),SPRINTER 5-t Pritsche/Fahrgestell (906),VW CRAFTER 30-35 Bus (2E),CRAFTER 30-50 Kasten (2E),CRAFTER 30-50 Pritsche/Fahrgestell (2E)
52814	**Stange/Strebe, Stabilisator, Link Stabiliser, Entretoise/tige, stabilisateur**
	MERCEDES-BENZ SPRINTER 3-t Bus (906),SPRINTER 3-t Kasten (906),SPRINTER 3-t Pritsche/Fahrgestell (906),SPRINTER 3,5 Pritsche/Fahrgestell (906),SPRINTER 3,5-t Bus (906),SPRINTER 3,5-t Kasten (906),SPRINTER 5-t Kasten (906),SPRINTER 5-t Pritsche/Fahrgestell (906),VW CRAFTER 30-35 Bus (2E),CRAFTER 30-50 Kasten (2E),CRAFTER 30-50 Pritsche/Fahrgestell (2E)
52815	**Stange/Strebe, Stabilisator, Link Stabiliser, Entretoise/tige, stabilisateur**
	MERCEDES-BENZ SPRINTER 3-t Bus (906),SPRINTER 3-t Kasten (906),SPRINTER 3-t Pritsche/Fahrgestell (906),SPRINTER 3,5 Pritsche/Fahrgestell (906),SPRINTER 3,5-t Bus (906),SPRINTER 3,5-t Kasten (906),SPRINTER 5-t Kasten (906),SPRINTER 5-t Pritsche/Fahrgestell (906),VW CRAFTER 30-35 Bus (2E),CRAFTER 30-50 Kasten (2E),CRAFTER 30-50 Pritsche/Fahrgestell (2E)
52816	**Lenker, Radaufhängung, Track Control Arm, Bras de liaison, suspension de roue**
	MERCEDES-BENZ SPRINTER 3-t Bus (906),SPRINTER 3-t Kasten (906),SPRINTER 3-t Pritsche/Fahrgestell (906),SPRINTER 3,5 Pritsche/Fahrgestell (906),SPRINTER 3,5-t Bus (906),SPRINTER 3,5-t Kasten (906),SPRINTER 5-t Kasten (906),SPRINTER 5-t Pritsche/Fahrgestell (906),VW CRAFTER 30-35 Bus (2E),CRAFTER 30-50 Kasten (2E),CRAFTER 30-50 Pritsche/Fahrgestell (2E)
52817	**Lenker, Radaufhängung, Track Control Arm, Bras de liaison, suspension de roue**

MERCEDES-BENZ SPRINTER 3-t Bus (906),SPRINTER 3-t Kasten (906),SPRINTER 3-t Pritsche/Fahrgestell (906),SPRINTER 3,5 Pritsche/Fahrgestell (906),SPRINTER 3,5-t Bus (906),SPRINTER 3,5-t Kasten (906),SPRINTER 5-t Kasten (906),SPRINTER 5-t Pritsche/Fahrgestell (906),VW CRAFTER 30-35 Bus (2E),CRAFTER 30-50 Kasten (2E),CRAFTER 30-50 Pritsche/Fahrgestell (2E)

53026 **Reparatursatz, Querlenker, Suspension Kit, Kit de réparation, bras triangulaire**

ALFA ROMEO GT,147 (937),156 Sportwagon (932),156 (932)

53080 **Reparatursatz, Querlenker, Suspension Kit, Kit de réparation, bras triangulaire**

ALFA ROMEO 166 (936)

53612 **Reparatursatz, Querlenker, Suspension Kit, Kit de réparation, bras triangulaire**

FORD FOCUS (DAW, DBW),FOCUS Stufenheck (DFW)

53612/1 **Reparatursatz, Querlenker, Suspension Kit, Kit de réparation, bras triangulaire**

FORD FOCUS (DAW, DBW),FOCUS Stufenheck (DFW)

53613 **Reparatursatz, Querlenker, Suspension Kit, Kit de réparation, bras triangulaire**

FORD FOCUS Kombi (DNW)

53613/1 **Reparatursatz, Querlenker, Suspension Kit, Kit de réparation, bras triangulaire**

FORD FOCUS Kombi (DNW)

53614 **Reparatursatz, Querlenker, Suspension Kit, Kit de réparation, bras triangulaire**

FORD MONDEO III (B5Y),MONDEO III Stufenheck (B4Y)

53615 **Reparatursatz, Querlenker, Suspension Kit, Kit de réparation, bras triangulaire**

FORD MONDEO III Kombi (BWY)

53633 **Reparatursatz, Querlenker, Suspension Kit, Kit de réparation, bras triangulaire**

OPEL ASTRA G Cabriolet,ASTRA G Caravan (F35_),ASTRA G CC (F48_, F08_),ASTRA G Coupe (F07_),ASTRA G Kasten (F70),ASTRA G Stufenheck (F69_),ZAFIRA (F75_),VAUXHALL ASTRA Mk IV,ASTRA Mk IV CC,ASTRA MK IV Convertible,ASTRA Mk IV Coupe,ASTRA Mk IV Estate,ZAFIRA

53670 **Reparatursatz, Querlenker, Suspension Kit, Kit de réparation, bras triangulaire**

ALPINA B6 (E36),BMW Z3,Z3 Coupe,3 Cabriolet (E36),3 Compact (E36),3 Coupe (E36),3 (E36),3 Touring (E36)

53670/2 **Reparatursatz, Querlenker, Suspension Kit, Kit de réparation, bras triangulaire**

ALPINA B6 (E36),BMW Z3,Z3 Coupe,3 Cabriolet (E36),3 Compact (E36),3 Coupe (E36),3 (E36),3 Touring (E36)

53676 **Reparatursatz, Querlenker, Suspension Kit, Kit de réparation, bras triangulaire**

ALPINA B3 Coupe (E46),B3 (E46),B3 Kombi (E46),BMW Z4 Coupe,Z4 (E85),3 Cabriolet (E46),3 Compact (E46),3 Coupe (E46),3 (E46),3 Touring (E46),BRILLIANCE BMW 3 SERIES (E46)

53690 **Reparatursatz, Querlenker, Suspension Kit, Kit de réparation, bras triangulaire**

MG MG ZT,MG ZT- T,ROVER 75 (RJ),75 Tourer (RJ)

59010 **Spurstangenkopf, Tie Rod End, Rotule de barre de connexion**

LANCIA YPSILON

59011 **Axialgelenk, Spurstange, Inner Tie Rod, Rotule de direction intérieure, barre de connexion**

LANCIA LYBRA SW (839BX),LYBRA (839AX)

59012 **Spurstangenkopf, Tie Rod End, Rotule de barre de connexion**

ALFA ROMEO MITO,CITROËN NEMO Kasten (AA_),NEMO Kombi,FIAT FIORINO Kasten,GRANDE PUNTO (199),LINEA,OPEL CORSA D,PEUGEOT BIPPER (AA_),BIPPER Tepee,VAUXHALL CORSA Mk III

59013 **Spurstangenkopf, Tie Rod End, Rotule de barre de connexion**

ALFA ROMEO MITO,CITROËN NEMO Kasten (AA_),NEMO Kombi,FIAT FIORINO Kasten,GRANDE PUNTO (199),LINEA,OPEL CORSA D,PEUGEOT BIPPER (AA_),BIPPER Tepee,VAUXHALL CORSA Mk III

59014 **Spurstangenkopf, Tie Rod End, Rotule de barre de connexion**

ALFA ROMEO BRERA,SPIDER,159,159 Sportwagon

59015 **Spurstangenkopf, Tie Rod End, Rotule de barre de connexion**

ALFA ROMEO BRERA,SPIDER,159,159 Sportwagon

59016 **Stange/Strebe, Stabilisator, Link Stabiliser, Entretoise/tige, stabilisateur**

ALFA ROMEO BRERA,SPIDER,159,159 Sportwagon

59017 **Stange/Strebe, Stabilisator, Link Stabiliser, Entretoise/tige, stabilisateur**

ALFA ROMEO BRERA,SPIDER,159,159 Sportwagon

59018 **Lenker, Radaufhängung, Track Control Arm, Bras de liaison, suspension de roue**

ALFA ROMEO BRERA,SPIDER,159,159 Sportwagon

59019 **Lenker, Radaufhängung, Track Control Arm, Bras de liaison, suspension de roue**

ALFA ROMEO BRERA,SPIDER,159,159 Sportwagon

59020 **Stange/Strebe, Stabilisator, Link Stabiliser, Entretoise/tige, stabilisateur**

ALFA ROMEO BRERA,SPIDER,159,159 Sportwagon

59021 **Stange/Strebe, Stabilisator, Link Stabiliser, Entretoise/tige, stabilisateur**

ALFA ROMEO BRERA,SPIDER,159,159 Sportwagon

59022 **Lenker, Radaufhängung, Track Control Arm, Bras de liaison, suspension de roue**

ALFA ROMEO BRERA,SPIDER,159,159 Sportwagon

59023 **Lenker, Radaufhängung, Track Control Arm, Bras de liaison, suspension de roue**

ALFA ROMEO BRERA,SPIDER,159,159 Sportwagon

59024 — **Stange/Strebe, Stabilisator, Link Stabiliser, Entretoise/tige, stabilisateur**

FIAT SEDICI,SUZUKI SX4 (GY),SX4 Stufenheck

59026HPS — **Stange/Strebe, Stabilisator, Link Stabiliser, Entretoise/tige, stabilisateur**

ALFA ROMEO MITO,FIAT GRANDE PUNTO (199),PUNTO EVO,OPEL CORSA D,VAUXHALL CORSA Mk III

59201 — **Spurstangenkopf, Tie Rod End, Rotule de barre de connexion**

GEO METRO,METRO Cabriolet,METRO Stufenheck,STORM Coupe,STORM Kombi Coupe,SUBARU JUSTY II (JMA, MS),SUZUKI BALENO (EG),BALENO Kombi (EG),BALENO Schrägheck (EG),CAPPUCINO (EA),IGNIS (FH),LIANA (ER),LIANA Kombi (ER),SWIFT Cabriolet (SF413),SWIFT I (AA),SWIFT II (AH, AJ),SWIFT II Schrägheck (EA, MA),WAGON R+ (EM),WAGON R+ (MM)

59202 — **Spurstangenkopf, Tie Rod End, Rotule de barre de connexion**

HYUNDAI LANTRA II Wagon (J2)

59203 — **Spurstangenkopf, Tie Rod End, Rotule de barre de connexion**

HYUNDAI ATOS (MX),ATOS PRIME (MX)

59204 — **Stange/Strebe, Stabilisator, Link Stabiliser, Entretoise/tige, stabilisateur**

HYUNDAI LANTRA I (J-1)

59205 — **Spurstangenkopf, Tie Rod End, Rotule de barre de connexion**

HYUNDAI H-1 Kasten,H-1 Starex (KMF),H100 Bus (P),H100 Kasten,STAREX (H1)

59206 — **Axialgelenk, Spurstange, Inner Tie Rod, Rotule de direction intérieure, barre de connexion**

PROTON PERSONA 300 (C9_M),PERSONA 400 (C9_S),PERSONA 400 Hatchback (C9_C, C9_S)

59207 — **Spurstangenkopf, Tie Rod End, Rotule de barre de connexion**

DAIHATSU ROCKY Hard Top (F7, F8),ROCKY Soft Top (F7, F8),WILDCAT/ROCKY (F70),WILDCAT/ROCKY (F75)

59208 — **Spurstangenkopf, Tie Rod End, Rotule de barre de connexion**

DAIHATSU FEROZA Hard Top (F300),FEROZA Soft Top (F300),ROCKY Hard Top (F7, F8),ROCKY Soft Top (F7, F8),WILDCAT/ROCKY (F70),WILDCAT/ROCKY (F75)

59209 — **Spurstangenkopf, Tie Rod End, Rotule de barre de connexion**

DAIHATSU ROCKY Hard Top (F7, F8),ROCKY Soft Top (F7, F8)

59210 — **Trag-/Führungsgelenk, Ball Joint, Rotule de suspension**

DAEWOO KORANDO (KJ),MUSSO (FJ)

59211 — **Spurstangenkopf, Tie Rod End, Rotule de barre de connexion**

CHEVROLET EVANDA,LACETTI,NUBIRA Kombi,NUBIRA Stufenheck,DAEWOO EVANDA (KLAL),LACETTI Schrägheck (KLAN),LEGANZA (KLAV),NUBIRA (KLAJ),NUBIRA Stufenheck (KLAJ),NUBIRA Stufenheck (KLAN),NUBIRA Wagon (KLAJ),NUBIRA Wagon (KLAN)

59212 — **Lenker, Radaufhängung, Track Control Arm, Bras de liaison, suspension de roue**

DAIHATSU CHARADE II (G11, G30)

59213 — **Lenker, Radaufhängung, Track Control Arm, Bras de liaison, suspension de roue**

DAIHATSU CHARADE III (G100, G101, G102)

59214 — **Axialgelenk, Spurstange, Inner Tie Rod, Rotule de direction intérieure, barre de connexion**

DAIHATSU CHARADE III (G100, G101, G102),CHARADE IV (G200, G202),CHARADE IV Stufenheck (G203)

59215 — **Spurstangenkopf, Tie Rod End, Rotule de barre de connexion**

DAIHATSU CHARADE I (G10),CHARADE II (G11, G30),CUORE I (L55, L60),CUORE II (L80, L81),CUORE III (L201),CUORE IV (L501),CUORE V (L5),MOVE (L6, L9)

59216 — **Spurstangenkopf, Tie Rod End, Rotule de barre de connexion**

DAIHATSU CHARADE I (G10),CHARADE II (G11, G30),CHARADE III (G100, G101, G102),CUORE I (L55, L60),CUORE II (L80, L81),CUORE III (L201),CUORE IV (L501),CUORE V (L5),MOVE (L6, L9)

59217 — **Axialgelenk, Spurstange, Inner Tie Rod, Rotule de direction intérieure, barre de connexion**

DAEWOO NUBIRA (KLAJ),NUBIRA Stufenheck (KLAJ),NUBIRA Wagon (KLAJ)

59218 — **Lenker, Radaufhängung, Track Control Arm, Bras de liaison, suspension de roue**

DAIHATSU CHARADE III (G100, G101, G102)

59220 — **Spurstangenkopf, Tie Rod End, Rotule de barre de connexion**

MITSUBISHI L 200 (K__T),L 300 Pritsche/Fahrgestell (L03_P)

59221 — **Spurstangenkopf, Tie Rod End, Rotule de barre de connexion**

MITSUBISHI L 200 (K__T),L 300 Pritsche/Fahrgestell (L03_P)

59222 — **Spurstangenkopf, Tie Rod End, Rotule de barre de connexion**

MITSUBISHI L 200 (K__T)

59223 — **Trag-/Führungsgelenk, Ball Joint, Rotule de suspension**

MITSUBISHI L 300 Bus (LO3_P/G, L0_2P),L 300 Kasten (L03_P)

59224 — **Trag-/Führungsgelenk, Ball Joint, Rotule de suspension**

MITSUBISHI L 300 Bus (LO3_P/G, L0_2P),L 300 Kasten (L03_P)

59225 — **Spurstangenkopf, Tie Rod End, Rotule de barre de connexion**

NISSAN ALMERA I (N15),ALMERA II (N16),ALMERA TINO (V10),MAXIMA QX (A32),MAXIMA QX (A33),MAXIMA Station Wagon

59226HPS — **Stange/Strebe, Stabilisator, Link Stabiliser, Entretoise/tige, stabilisateur**

NISSAN ALMERA II Hatchback (N16),ALMERA II (N16)

59227 — **Spurstangenkopf, Tie Rod End, Rotule de barre de connexion**

NISSAN URVAN Bus (E24),URVAN Kasten (E24)

59228	**Spurstangenkopf, Tie Rod End, Rotule de barre de connexion**
	NISSAN URVAN Bus (E24),URVAN Kasten (E24)
59229	**Spurstangenkopf, Tie Rod End, Rotule de barre de connexion**
	NISSAN VANETTE Bus (C22),VANETTE Kasten (C22)
59230	**Spurstange, Rod Assembly, Barre de connexion**
	KIA SPORTAGE (K00)
59231	**Axialgelenk, Spurstange, Inner Tie Rod, Rotule de direction intérieure, barre de connexion**
	MAZDA MX-3 (EC),323 C IV (BG),323 F IV (BG),323 S IV (BG)
59232	**Axialgelenk, Spurstange, Inner Tie Rod, Rotule de direction intérieure, barre de connexion**
	MAZDA 323 C V (BA),323 F V (BA),323 P V (BA),323 S V (BA)
59234	**Trag-/Führungsgelenk, Ball Joint, Rotule de suspension**
	TOYOTA CELICA Cabriolet (_T18_),CELICA Coupe (_T18_)
59235	**Trag-/Führungsgelenk, Ball Joint, Rotule de suspension**
	TOYOTA HIACE III Kasten (H50),HIACE III Wagon (H50)
59236	**Trag-/Führungsgelenk, Ball Joint, Rotule de suspension**
	TOYOTA HILUX Pick-up (_N_),VW TARO
59237	**Spurstangenkopf, Tie Rod End, Rotule de barre de connexion**
	TOYOTA LAND CRUISER Hardtop (_J7_),LAND CRUISER (_J7_),LAND CRUISER 80 (_J8_)
59238	**Spurstangenkopf, Tie Rod End, Rotule de barre de connexion**
	TOYOTA HIACE II Wagon (H20),HIACE III Kasten (H50),HIACE III Wagon (H50),HIACE IV Kasten,HIACE IV Wagon
59239	**Spurstangenkopf, Tie Rod End, Rotule de barre de connexion**
	TOYOTA PREVIA (TCR1_, 2_)
59240	**Lenkhebel, Steering Lever, Levier de commande de direction**
	TOYOTA 4 RUNNER (_N130)
59241	**Stange/Strebe, Stabilisator, Link Stabiliser, Entretoise/tige, stabilisateur**
	HONDA CIVIC VI Coupe (EM)
59242	**Stange/Strebe, Stabilisator, Link Stabiliser, Entretoise/tige, stabilisateur**
	HONDA CIVIC VI Coupe (EM)
59243	**Stange/Strebe, Stabilisator, Link Stabiliser, Entretoise/tige, stabilisateur**
	HONDA HR-V (GH)
59244	**Stange/Strebe, Stabilisator, Link Stabiliser, Entretoise/tige, stabilisateur**
	HONDA HR-V (GH)
59245	**Stange/Strebe, Stabilisator, Link Stabiliser, Entretoise/tige, stabilisateur**
	HONDA PRELUDE V (BB)
59246	**Axialgelenk, Spurstange, Inner Tie Rod, Rotule de direction intérieure, barre de connexion**
	HONDA ACCORD V Aerodeck (CE),ACCORD V Coupe (CD7, CD9),ACCORD VI (CE, CF),SHUTTLE (RA)
59247	**Axialgelenk, Spurstange, Inner Tie Rod, Rotule de direction intérieure, barre de connexion**
	HONDA LEGEND I Coupe (KA3),LEGEND I (HS, KA)
59249	**Spurstangenkopf, Tie Rod End, Rotule de barre de connexion**
	HONDA LEGEND II Coupe (KA8),LEGEND II (KA7)
59250	**Stange/Strebe, Stabilisator, Link Stabiliser, Entretoise/tige, stabilisateur**
	NISSAN SERENA (C23M),VANETTE CARGO Bus (HC 23),VANETTE CARGO Kasten (HC 23)
59251	**Stange/Strebe, Stabilisator, Link Stabiliser, Entretoise/tige, stabilisateur**
	NISSAN SERENA (C23M),VANETTE CARGO Bus (HC 23),VANETTE CARGO Kasten (HC 23)
59253	**Axialgelenk, Spurstange, Inner Tie Rod, Rotule de direction intérieure, barre de connexion**
	NISSAN ALMERA I Hatchback (N15),ALMERA I (N15)
59254	**Spurstangenkopf, Tie Rod End, Rotule de barre de connexion**
	NISSAN PICK UP (D21)
59255	**Spurstangenkopf, Tie Rod End, Rotule de barre de connexion**
	NISSAN BLUEBIRD Hatchback (T72, T12),BLUEBIRD Station Wagon (WU11),BLUEBIRD (T72 , T12),BLUEBIRD (U11)
59256	**Spurstangenkopf, Tie Rod End, Rotule de barre de connexion**
	NISSAN MAXIMA (J30)
59257	**Spurstangenkopf, Tie Rod End, Rotule de barre de connexion**
	NISSAN CHERRY (N12),PRAIRIE (M10, NM10),PRIMERA Traveller (W10),STANZA Hatchback (T11),SUNNY I (B11),SUNNY I Coupe (B11),SUNNY I Traveller (B11),SUNNY II Hatchback (N13),SUNNY II (N13),SUNNY II Traveller (B12),SUNNY Kasten (Y10),100 NX (B13)
59258	**Spurstangenkopf, Tie Rod End, Rotule de barre de connexion**
	NISSAN PICK UP (D21)
59259	**Spurstangenkopf, Tie Rod End, Rotule de barre de connexion**
	NISSAN PICK UP (D21),PICK UP (720)

59260 **Trag-/Führungsgelenk, Ball Joint, Rotule de suspension**

TOYOTA HILUX Pick-up (_N_),4 RUNNER (_N130)

59261 **Trag-/Führungsgelenk, Ball Joint, Rotule de suspension**

TOYOTA HILUX Pick-up (_N_),4 RUNNER (_N130),VW TARO

59262 **Spurstange, Rod Assembly, Barre de connexion**

TOYOTA HILUX Pick-up (_N_),VW TARO

59263 **Axialgelenk, Spurstange, Inner Tie Rod, Rotule de direction intérieure, barre de connexion**

TOYOTA STARLET (_P8_)

59264 **Axialgelenk, Spurstange, Inner Tie Rod, Rotule de direction intérieure, barre de connexion**

TOYOTA CARINA II Station Wagon (_T17_),CARINA II Stufenheck (_T17_),CARINA II (_T17_)

59265 **Axialgelenk, Spurstange, Inner Tie Rod, Rotule de direction intérieure, barre de connexion**

TOYOTA CARINA II Station Wagon (_T17_),CARINA II Stufenheck (_T17_),CARINA II (_T17_)

59266 **Axialgelenk, Spurstange, Inner Tie Rod, Rotule de direction intérieure, barre de connexion**

TOYOTA HIACE III Kasten (H50),HIACE III Wagon (H50),HIACE IV Kasten

59267 **Axialgelenk, Spurstange, Inner Tie Rod, Rotule de direction intérieure, barre de connexion**

TOYOTA PREVIA (TCR1_, 2_)

59268 **Axialgelenk, Spurstange, Inner Tie Rod, Rotule de direction intérieure, barre de connexion**

TOYOTA CAMRY Station Wagon (_V10),CAMRY (_V1_),CAMRY (_V20)

59270 **Axialgelenk, Spurstange, Inner Tie Rod, Rotule de direction intérieure, barre de connexion**

TOYOTA CARINA E (_T19_)

59272 **Axialgelenk, Spurstange, Inner Tie Rod, Rotule de direction intérieure, barre de connexion**

TOYOTA CAMRY Station Wagon (_V10),CAMRY (_V1_),CAMRY (_V20)

59273 **Spurstangenkopf, Tie Rod End, Rotule de barre de connexion**

TOYOTA MR 2 (_W3_),PASEO Cabriolet (EL54),PASEO Coupe (EL54),STARLET (_P8_)

59274 **Spurstangenkopf, Tie Rod End, Rotule de barre de connexion**

TOYOTA MR 2 (_W3_),PASEO Cabriolet (EL54),PASEO Coupe (EL54),STARLET (_P8_)

59275 **Spurstangenkopf, Tie Rod End, Rotule de barre de connexion**

TOYOTA CARINA II Stufenheck (_T17_),CARINA II (_T17_)

59276 **Spurstangenkopf, Tie Rod End, Rotule de barre de connexion**

TOYOTA CAMRY Station Wagon (_V10),CAMRY (_V1_),CAMRY (_V20)

59277 **Spurstangenkopf, Tie Rod End, Rotule de barre de connexion**

TOYOTA CARINA E Sportswagon (_T19_),CARINA E Stufenheck (_T19_),CARINA E (_T19_),PICNIC (_XM10)

59278 **Spurstangenkopf, Tie Rod End, Rotule de barre de connexion**

TOYOTA HIACE I Wagon (H10),HIACE II Wagon (H20),HILUX Pick-up (_N_),4 RUNNER (_N130),VW TARO

59279 **Spurstangenkopf, Tie Rod End, Rotule de barre de connexion**

TOYOTA CARINA II Station Wagon (_T17_),CARINA II Stufenheck (_T17_),CARINA II (_T17_)

59280 **Spurstangenkopf, Tie Rod End, Rotule de barre de connexion**

TOYOTA PREVIA (TCR1_, 2_)

59281 **Spurstangenkopf, Tie Rod End, Rotule de barre de connexion**

TOYOTA CARINA E Sportswagon (_T19_),CARINA E Stufenheck (_T19_),CARINA E (_T19_),PICNIC (_XM10)

59282 **Spurstangenkopf, Tie Rod End, Rotule de barre de connexion**

TOYOTA HILUX Pick-up (_N_),VW TARO

59283 **Lenker, Radaufhängung, Track Control Arm, Bras de liaison, suspension de roue**

MITSUBISHI COLT V (CJ_A),LANCER V (CB/D_A),LANCER V Station Wagon (CB_W, CD_W),LANCER VI (CK/P_A)

59284 **Lenker, Radaufhängung, Track Control Arm, Bras de liaison, suspension de roue**

MITSUBISHI COLT V (CJ_A),LANCER V (CB/D_A),LANCER V Station Wagon (CB_W, CD_W),LANCER VI (CK/P_A)

59285 **Lenker, Radaufhängung, Track Control Arm, Bras de liaison, suspension de roue**

TOYOTA HIACE IV Kasten,HIACE IV Wagon

59286 **Lenker, Radaufhängung, Track Control Arm, Bras de liaison, suspension de roue**

TOYOTA HIACE IV Kasten,HIACE IV Wagon

59287 **Lenker, Radaufhängung, Track Control Arm, Bras de liaison, suspension de roue**

TOYOTA PASEO Cabriolet (EL54),PASEO Coupe (EL54)

59288 **Lenker, Radaufhängung, Track Control Arm, Bras de liaison, suspension de roue**

TOYOTA PASEO Cabriolet (EL54),PASEO Coupe (EL54)

59289 **Lenker, Radaufhängung, Track Control Arm, Bras de liaison, suspension de roue**

SUZUKI SUPER CARRY Bus (ED)

59290 **Trag-/Führungsgelenk, Ball Joint, Rotule de suspension**

ISUZU CAMPO (KB),MIDI Van (94000, 98000),PICK UP,TROOPER Soft Top (UBS),TROOPER (UBS)

59291 **Lenker, Radaufhängung, Track Control Arm, Bras de liaison, suspension de roue**

HYUNDAI ACCENT Stufenheck (X-3),ACCENT (X-3)

59292 **Lenker, Radaufhängung, Track Control Arm, Bras de liaison, suspension de roue**

HYUNDAI ACCENT Stufenheck (X-3),ACCENT (X-3)

59293 **Axialgelenk, Spurstange, Inner Tie Rod, Rotule de direction intérieure, barre de connexion**

TOYOTA PREVIA (ACR3_)

59294 **Axialgelenk, Spurstange, Inner Tie Rod, Rotule de direction intérieure, barre de connexion**

TOYOTA YARIS (_CP10),YARIS VERSO (NC/LP2_)

59295 **Axialgelenk, Spurstange, Inner Tie Rod, Rotule de direction intérieure, barre de connexion**

DAEWOO ESPERO (KLEJ),LANOS (KLAT),LANOS Stufenheck (KLAT),NEXIA (KLETN),NEXIA Stufenheck (KLETN),OPEL ASCONA C CC (84_, 89_),ASCONA C (81_, 86_, 87_, 88_),KADETT E Cabriolet (43B_),KADETT E Caravan (35_, 36_, 45_, 46_),KADETT E CC (33_, 34_, 43_, 44_),KADETT E Combo (38_, 48_),KADETT E Kasten (37_, 47_),KADETT E (39_, 49_),VAUXHALL ASTRA Mk II Belmont,ASTRA Mk II CC,ASTRA Mk II Convertible,ASTRA Mk II Estate,CAVALIER Mk II,CAVALIER Mk II CC,CAVALIER Mk II Convertible,CAVALIER Mk II Estate

59296 **Axialgelenk, Spurstange, Inner Tie Rod, Rotule de direction intérieure, barre de connexion**

DAEWOO ESPERO (KLEJ),LANOS (KLAT),LANOS Stufenheck (KLAT),NEXIA (KLETN),NEXIA Stufenheck (KLETN),OPEL ASCONA C CC (84_, 89_),ASCONA C (81_, 86_, 87_, 88_),KADETT E Cabriolet (43B_),KADETT E Caravan (35_, 36_, 45_, 46_),KADETT E CC (33_, 34_, 43_, 44_),KADETT E Combo (38_, 48_),KADETT E Kasten (37_, 47_),KADETT E (39_, 49_),VAUXHALL ASTRA Mk II Belmont,ASTRA Mk II CC,ASTRA Mk II Convertible,ASTRA Mk II Estate,CAVALIER Mk II,CAVALIER Mk II CC,CAVALIER Mk II Convertible,CAVALIER Mk II Estate

59297 **Trag-/Führungsgelenk, Ball Joint, Rotule de suspension**

SUBARU LEONE I (AB),LEONE I Hatchback,LEONE I Station Wagon,LEONE II,LEONE II Station Wagon,1800 XT COUPE (XT)

59298 **Axialgelenk, Spurstange, Inner Tie Rod, Rotule de direction intérieure, barre de connexion**

SUZUKI SWIFT Cabriolet (SF413),SWIFT II (AH, AJ),SWIFT II Schrägheck (EA, MA)

59299 **Stange/Strebe, Stabilisator, Link Stabiliser, Entretoise/tige, stabilisateur**

SUZUKI SWIFT I (AA),SWIFT II (AH, AJ)

59300 **Stange/Strebe, Stabilisator, Link Stabiliser, Entretoise/tige, stabilisateur**

SUZUKI VITARA (ET, TA)

59303 **Lenkhebel, Steering Lever, Levier de commande de direction**

MITSUBISHI L 200 (K__T)

59304 **Lenkhebel, Steering Lever, Levier de commande de direction**

MITSUBISHI L 200 (K__T)

59305 **Lenkhebel, Steering Lever, Levier de commande de direction**

MITSUBISHI PAJERO II Canvas Top (V2_W, V4_W),PAJERO II (V2_W, V4_W)

59306 **Axialgelenk, Spurstange, Inner Tie Rod, Rotule de direction intérieure, barre de connexion**

MITSUBISHI L 300 Bus (LO3_P/G, L0_2P),L 300 Bus (P0_W, P1_W, P2_W),L 300 Kasten (P0_W, P1_W),L 300 Pritsche/Fahrgestell (P1_T)

59307 **Axialgelenk, Spurstange, Inner Tie Rod, Rotule de direction intérieure, barre de connexion**

MITSUBISHI ECLIPSE I (D2_A),ECLIPSE II (D3_),GALANT IV (E3_A),GALANT IV Stufenheck (E3_A),GALANT V (E5_A, E7_A, E8_A),GALANT V Stufenheck (E5_A, E7_A, E8_A),GALANT VI (EA_),GALANT VI Station Wagon (EA_)

59308 **Axialgelenk, Spurstange, Inner Tie Rod, Rotule de direction intérieure, barre de connexion**

MITSUBISHI COLT IV (CA_A),LANCER V (CB/D_A),LANCER V Station Wagon (CB_W, CD_W)

59309 **Stange/Strebe, Stabilisator, Link Stabiliser, Entretoise/tige, stabilisateur**

MITSUBISHI COLT IV (CA_A)

59310 **Spurstangenkopf, Tie Rod End, Rotule de barre de connexion**

MITSUBISHI L 300 Bus (P0_W, P1_W, P2_W),L 300 Kasten (P0_W, P1_W),L 300 Pritsche/Fahrgestell (P1_T),3000 GT (Z16A)

59311 **Spurstangenkopf, Tie Rod End, Rotule de barre de connexion**

HONDA PRELUDE IV (BB)

59312 **Spurstangenkopf, Tie Rod End, Rotule de barre de connexion**

HONDA SHUTTLE (RA)

59313 **Spurstangenkopf, Tie Rod End, Rotule de barre de connexion**

HONDA SHUTTLE (RA)

59314 **Spurstangenkopf, Tie Rod End, Rotule de barre de connexion**

HONDA LEGEND II Coupe (KA8),LEGEND II (KA7)

59315 **Spurstangenkopf, Tie Rod End, Rotule de barre de connexion**

HONDA PRELUDE IV (BB)

59317 **Axialgelenk, Spurstange, Inner Tie Rod, Rotule de direction intérieure, barre de connexion**

SUZUKI ALTO I (SS80),ALTO II (EC)

59318 **Trag-/Führungsgelenk, Ball Joint, Rotule de suspension**

TOYOTA LITEACE Bus (CM30_G, KM30_G),LITEACE Kasten (CM3_V, KM3_V),LITEACE Kasten (M2_V),MODELL F Bus (_R2_, 31)

59319 **Spurstangenkopf, Tie Rod End, Rotule de barre de connexion**

HONDA ACCORD I Hatchback (SJ, SY),ACCORD I (SJ, SY),ACCORD II (AC, AD),ACCORD II Hatchback (AC, AD),ACCORD III Aerodeck (CA5),ACCORD III (CA4, CA5),CIVIC I Hatchback (SB, SS),CIVIC I Shuttle (AN, AR),CIVIC I (SL),CIVIC I Wagon (WC),CIVIC II,CIVIC II Hatchback (AL, AJ, AG, AH),CRX I (AF, AS),JAZZ I,PRELUDE I Coupe (SN),PRELUDE II (AB),QUINTET (SU),ISUZU GEMINI (JT),GEMINI Stufenheck (JT),ROVER 200 (XH),2000-3500 Hatchback (SD1)

59320 **Spurstangenkopf, Tie Rod End, Rotule de barre de connexion**

SUZUKI ALTO I (SS80),ALTO II (EC),ALTO III (EF),WAGON R+ (EM)

59321	**Lenker, Radaufhängung, Track Control Arm, Bras de liaison, suspension de roue**
	NISSAN SUNNY II Coupe (B12),SUNNY II Traveller (B12)
59322	**Lenker, Radaufhängung, Track Control Arm, Bras de liaison, suspension de roue**
	NISSAN SUNNY II Coupe (B12),SUNNY II Traveller (B12)
59323	**Trag-/Führungsgelenk, Ball Joint, Rotule de suspension**
	TOYOTA CARINA II Stufenheck (_T15_),CARINA II (_T15_),CELICA (ZZT23_),COROLLA Coupe (AE86),COROLLA (_E8_),COROLLA FX Compact (E8B),COROLLA Liftback (_E7_),COROLLA Liftback (_E8_)
59324	**Trag-/Führungsgelenk, Ball Joint, Rotule de suspension**
	SUZUKI VITARA Cabrio (ET, TA),VITARA (ET, TA)
59325	**Trag-/Führungsgelenk, Ball Joint, Rotule de suspension**
	NISSAN CHERRY (N12),PRAIRIE (M10, NM10),SUNNY I (B11),SUNNY I Coupe (B11),SUNNY I Traveller (B11)
59326	**Trag-/Führungsgelenk, Ball Joint, Rotule de suspension**
	KIA SEPHIA (FA),SEPHIA Stufenheck (FA)
59327	**Trag-/Führungsgelenk, Ball Joint, Rotule de suspension**
	HYUNDAI STAREX (H1)
59328	**Axialgelenk, Spurstange, Inner Tie Rod, Rotule de direction intérieure, barre de connexion**
	TOYOTA CAMRY Station Wagon (_V2_),CAMRY (_V2_)
59329	**Trag-/Führungsgelenk, Ball Joint, Rotule de suspension**
	HYUNDAI STAREX (H1)
59330	**Lenker, Radaufhängung, Track Control Arm, Bras de liaison, suspension de roue**
	HONDA CIVIC I Shuttle (AN, AR),CIVIC II,CIVIC II Hatchback (AL, AJ, AG, AH),CRX I (AF, AS),ISUZU GEMINI (JT),GEMINI Stufenheck (JT),ROVER 200 (XH)
59331	**Lenker, Radaufhängung, Track Control Arm, Bras de liaison, suspension de roue**
	HONDA CIVIC I Shuttle (AN, AR),CIVIC II,CIVIC II Hatchback (AL, AJ, AG, AH),CRX I (AF, AS),ISUZU GEMINI (JT),GEMINI Stufenheck (JT),ROVER 200 (XH)
59332	**Axialgelenk, Spurstange, Inner Tie Rod, Rotule de direction intérieure, barre de connexion**
	TOYOTA CARINA II Stufenheck (_T15_),CARINA II (_T15_),CELICA Coupe (_T18_),CELICA (_T20_),COROLLA (_E8_),COROLLA FX Compact (E8B),COROLLA Liftback (_E8_)
59333	**Trag-/Führungsgelenk, Ball Joint, Rotule de suspension**
	HONDA LEGEND I Coupe (KA3),LEGEND I (HS, KA),LEGEND III (KA9),ROVER 800 Coupe,800 Hatchback (XS),800 (XS)
59334	**Trag-/Führungsgelenk, Ball Joint, Rotule de suspension**
	TOYOTA CAMRY Station Wagon (_V2_),MR 2 (_W1_),MR 2 (_W2_),TERCEL (AL2_),TERCEL (_L1_, _L2_)
59335	**Trag-/Führungsgelenk, Ball Joint, Rotule de suspension**
	TOYOTA HIACE II Kasten (H20),HIACE II Wagon (H20),HIACE III Kasten (H50),HIACE III Wagon (H50)
59336	**Axialgelenk, Spurstange, Inner Tie Rod, Rotule de direction intérieure, barre de connexion**
	HYUNDAI LANTRA I (J-1),SONATA I (Y-2)
59337	**Trag-/Führungsgelenk, Ball Joint, Rotule de suspension**
	KIA SPORTAGE (K00)
59338	**Spurstangenkopf, Tie Rod End, Rotule de barre de connexion**
	MAZDA MPV I (LV),MPV II (LW)
59339	**Axialgelenk, Spurstange, Inner Tie Rod, Rotule de direction intérieure, barre de connexion**
	HYUNDAI LANTRA I (J-1)
59340	**Lenkhebel, Steering Lever, Levier de commande de direction**
	MITSUBISHI PAJERO II Canvas Top (V2_W, V4_W),PAJERO II (V2_W, V4_W)
59341	**Stange/Strebe, Stabilisator, Link Stabiliser, Entretoise/tige, stabilisateur**
	KIA SEPHIA (FA),SHUMA (FB),SHUMA II (FB),SHUMA Stufenheck (FB)
59341HPS	**Stange/Strebe, Stabilisator, Link Stabiliser, Entretoise/tige, stabilisateur**
	KIA CARENS I (FC),SEPHIA (FA),SHUMA (FB),SHUMA II (FB),SHUMA II Stufenheck (FB),SHUMA Stufenheck (FB)
59342	**Spurstangenkopf, Tie Rod End, Rotule de barre de connexion**
	KIA CARENS I (FC),CARENS II (FJ),CARENS III (UN),CLARUS Kombi (GC),CLARUS (K9A),SEPHIA (FA),SEPHIA Stufenheck (FA),SHUMA (FB),SHUMA II (FB),SHUMA II Stufenheck (FB),SHUMA Stufenheck (FB)
59343HPS	**Stange/Strebe, Stabilisator, Link Stabiliser, Entretoise/tige, stabilisateur**
	KIA CARENS I (FC),CARENS II (FJ),CARENS III (UN),SHUMA (FB),SHUMA II (FB),SHUMA II Stufenheck (FB),SHUMA Stufenheck (FB)
59344	**Stange/Strebe, Stabilisator, Link Stabiliser, Entretoise/tige, stabilisateur**
	KIA SEPHIA (FA),SHUMA (FB),SHUMA II (FB),SHUMA Stufenheck (FB)
59344HPS	**Stange/Strebe, Stabilisator, Link Stabiliser, Entretoise/tige, stabilisateur**
	KIA CARENS I (FC),SEPHIA (FA),SHUMA (FB),SHUMA II (FB),SHUMA II Stufenheck (FB),SHUMA Stufenheck (FB)
59345	**Stange/Strebe, Stabilisator, Link Stabiliser, Entretoise/tige, stabilisateur**
	KIA SPORTAGE (K00)
59346	**Trag-/Führungsgelenk, Ball Joint, Rotule de suspension**
	KIA CARENS I (FC),CARENS II (FJ),SHUMA (FB),SHUMA II (FB),SHUMA II Stufenheck (FB),SHUMA Stufenheck (FB)

59349	**Axialgelenk, Spurstange, Inner Tie Rod, Rotule de direction intérieure, barre de connexion**
	MAZDA MPV I (LV),MPV II (LW)
59350	**Spurstangenkopf, Tie Rod End, Rotule de barre de connexion**
	FORD USA PROBE I,PROBE II (ECP),MAZDA MPV II (LW),MX-6 (GE),PREMACY (CP),XEDOS 6 (CA),323 F VI (BJ),323 S VI (BJ),626 III Coupe (GD),626 III (GD),626 III Hatchback (GD),626 III Station Wagon (GV),626 IV (GE),626 IV Hatchback (GE),626 V (GF),626 V Hatchback (GF),626 V Station Wagon (GW)
59351	**Stange/Strebe, Stabilisator, Link Stabiliser, Entretoise/tige, stabilisateur**
	HYUNDAI GETZ (TB)
59351HPS	**Stange/Strebe, Stabilisator, Link Stabiliser, Entretoise/tige, stabilisateur**
	HYUNDAI GETZ (TB)
59353	**Trag-/Führungsgelenk, Ball Joint, Rotule de suspension**
	TOYOTA LAND CRUISER 90 (_J9_)
59354	**Trag-/Führungsgelenk, Ball Joint, Rotule de suspension**
	TOYOTA LAND CRUISER 90 (_J9_)
59355	**Stange/Strebe, Stabilisator, Link Stabiliser, Entretoise/tige, stabilisateur**
	HYUNDAI GETZ (TB)
59355HPS	**Stange/Strebe, Stabilisator, Link Stabiliser, Entretoise/tige, stabilisateur**
	HYUNDAI GETZ (TB)
59356	**Lenker, Radaufhängung, Track Control Arm, Bras de liaison, suspension de roue**
	MITSUBISHI LANCER IV (C6_A, C7_A),LANCER IV Stufenheck (C6_A)
59357	**Lenker, Radaufhängung, Track Control Arm, Bras de liaison, suspension de roue**
	MITSUBISHI LANCER IV (C6_A, C7_A),LANCER IV Stufenheck (C6_A)
59358	**Lenker, Radaufhängung, Track Control Arm, Bras de liaison, suspension de roue**
	NISSAN MICRA C+C (K12),MICRA (K12),NOTE (E11)
59359	**Lenker, Radaufhängung, Track Control Arm, Bras de liaison, suspension de roue**
	NISSAN MICRA C+C (K12),MICRA (K12),NOTE (E11)
59360	**Axialgelenk, Spurstange, Inner Tie Rod, Rotule de direction intérieure, barre de connexion**
	NISSAN ALMERA I Hatchback (N15),ALMERA I (N15)
59361	**Stange/Strebe, Stabilisator, Link Stabiliser, Entretoise/tige, stabilisateur**
	TOYOTA PREVIA (TCR1_, 2_)
59361HPS	**Stange/Strebe, Stabilisator, Link Stabiliser, Entretoise/tige, stabilisateur**
	TOYOTA PREVIA (TCR1_, 2_)
59362	**Stange/Strebe, Stabilisator, Link Stabiliser, Entretoise/tige, stabilisateur**
	TOYOTA PREVIA (TCR1_, 2_)
59362HPS	**Stange/Strebe, Stabilisator, Link Stabiliser, Entretoise/tige, stabilisateur**
	TOYOTA PREVIA (TCR1_, 2_)
59363	**Stange/Strebe, Stabilisator, Link Stabiliser, Entretoise/tige, stabilisateur**
	TOYOTA PREVIA (ACR3_)
59363HPS	**Stange/Strebe, Stabilisator, Link Stabiliser, Entretoise/tige, stabilisateur**
	TOYOTA PREVIA (ACR3_)
59364	**Axialgelenk, Spurstange, Inner Tie Rod, Rotule de direction intérieure, barre de connexion**
	SUBARU IMPREZA Coupe (GFC),IMPREZA Station Wagon (GD, GG),IMPREZA Station Wagon (GF),IMPREZA Stufenheck (GC),IMPREZA Stufenheck (GD, GG),LEGACY II (BD, BG),LEGACY II Station Wagon (BD, BG)
59365	**Stange/Strebe, Stabilisator, Link Stabiliser, Entretoise/tige, stabilisateur**
	HYUNDAI COUPE (GK),COUPE (RD)
59366	**Stange/Strebe, Stabilisator, Link Stabiliser, Entretoise/tige, stabilisateur**
	HYUNDAI COUPE (GK),COUPE (RD)
59367	**Schraube, Spureinstellung, Bolt, wheel alignment, Boulon, alignement des roues**
	DAEWOO ESPERO (KLEJ),LANOS (KLAT),LANOS Stufenheck (KLAT),NEXIA (KLETN),NEXIA Stufenheck (KLETN),OPEL ASCONA C CC (84_, 89_),ASCONA C (81_, 86_, 87_, 88_),KADETT D Caravan (35_, 36_, 45_, 46_),KADETT D (31_-34_, 41_-44_),KADETT E Cabriolet (43B_),KADETT E Caravan (35_, 36_, 45_, 46_),KADETT E CC (33_, 34_, 43_, 44_),KADETT E Combo (38_, 48_),KADETT E Kasten (37_, 47_),KADETT E (39_, 49_),VAUXHALL ASTRA Mk II Belmont,ASTRA Mk II CC,ASTRA Mk II Convertible,ASTRA Mk II Estate,CAVALIER Mk II,CAVALIER Mk II CC,CAVALIER Mk II Convertible,CAVALIER Mk II Estate
59368	**Lenker, Radaufhängung, Track Control Arm, Bras de liaison, suspension de roue**
	MAZDA 6 (GG),6 Hatchback (GG),6 Station Wagon (GY)
59369	**Lenker, Radaufhängung, Track Control Arm, Bras de liaison, suspension de roue**
	MAZDA 6 (GG),6 Hatchback (GG),6 Station Wagon (GY)
59370	**Lenker, Radaufhängung, Track Control Arm, Bras de liaison, suspension de roue**
	MAZDA 6 (GG),6 Hatchback (GG),6 Station Wagon (GY)
59371	**Spurstangenkopf, Tie Rod End, Rotule de barre de connexion**
	HONDA LEGEND I Coupe (KA3),LEGEND I (HS, KA),ROVER 800 Coupe,800 Hatchback (XS),800 (XS)

59372 **Spurstangenkopf, Tie Rod End, Rotule de barre de connexion**

HONDA LEGEND I Coupe (KA3),LEGEND I (HS, KA),ROVER 800 Coupe,800 Hatchback (XS),800 (XS)

59373 **Spurstangenkopf, Tie Rod End, Rotule de barre de connexion**

MITSUBISHI L 200 (K__T)

59374 **Lenker, Radaufhängung, Track Control Arm, Bras de liaison, suspension de roue**

TOYOTA CAMRY Station Wagon (_V10),CAMRY (_V1_)

59375 **Lenker, Radaufhängung, Track Control Arm, Bras de liaison, suspension de roue**

TOYOTA CAMRY Station Wagon (_V10),CAMRY (_V1_)

59376 **Lenker, Radaufhängung, Track Control Arm, Bras de liaison, suspension de roue**

HYUNDAI ACCENT (LC),ACCENT Stufenheck (LC)

59377 **Lenker, Radaufhängung, Track Control Arm, Bras de liaison, suspension de roue**

HYUNDAI ACCENT (LC),ACCENT Stufenheck (LC)

59378 **Lenker, Radaufhängung, Track Control Arm, Bras de liaison, suspension de roue**

HYUNDAI GETZ (TB)

59379 **Lenker, Radaufhängung, Track Control Arm, Bras de liaison, suspension de roue**

HYUNDAI GETZ (TB)

59380 **Lenker, Radaufhängung, Track Control Arm, Bras de liaison, suspension de roue**

TOYOTA RAV 4 II (XA2)

59380/1 **Lenker, Radaufhängung, Track Control Arm, Bras de liaison, suspension de roue**

TOYOTA RAV 4 II (XA2)

59381 **Lenker, Radaufhängung, Track Control Arm, Bras de liaison, suspension de roue**

TOYOTA RAV 4 II (XA2)

59381/1 **Lenker, Radaufhängung, Track Control Arm, Bras de liaison, suspension de roue**

TOYOTA RAV 4 II (XA2)

59382 **Lenker, Radaufhängung, Track Control Arm, Bras de liaison, suspension de roue**

HYUNDAI SONATA III (EF)

59383 **Lenker, Radaufhängung, Track Control Arm, Bras de liaison, suspension de roue**

HYUNDAI SONATA III (EF)

59384 **Lenker, Radaufhängung, Track Control Arm, Bras de liaison, suspension de roue**

HYUNDAI SONATA IV (EU4)

59385 **Lenker, Radaufhängung, Track Control Arm, Bras de liaison, suspension de roue**

HYUNDAI SONATA IV (EU4)

59386 **Lenker, Radaufhängung, Track Control Arm, Bras de liaison, suspension de roue**

HYUNDAI STAREX (H1)

59387 **Lenker, Radaufhängung, Track Control Arm, Bras de liaison, suspension de roue**

HYUNDAI STAREX (H1)

59388 **Stange/Strebe, Stabilisator, Link Stabiliser, Entretoise/tige, stabilisateur**

MAZDA PREMACY (CP),323 F VI (BJ),323 S VI (BJ)

59388HPS **Stange/Strebe, Stabilisator, Link Stabiliser, Entretoise/tige, stabilisateur**

MAZDA PREMACY (CP),323 F VI (BJ),323 S VI (BJ)

59389 **Lenker, Radaufhängung, Track Control Arm, Bras de liaison, suspension de roue**

MAZDA PREMACY (CP)

59390 **Lenker, Radaufhängung, Track Control Arm, Bras de liaison, suspension de roue**

MAZDA PREMACY (CP)

59391 **Lenker, Radaufhängung, Track Control Arm, Bras de liaison, suspension de roue**

TOYOTA LAND CRUISER 90 (_J9_)

59392 **Lenker, Radaufhängung, Track Control Arm, Bras de liaison, suspension de roue**

TOYOTA LAND CRUISER 90 (_J9_)

59394 **Lenker, Radaufhängung, Track Control Arm, Bras de liaison, suspension de roue**

MAZDA MPV II (LW)

59395 **Lenker, Radaufhängung, Track Control Arm, Bras de liaison, suspension de roue**

MAZDA MPV II (LW)

59396 **Lenker, Radaufhängung, Track Control Arm, Bras de liaison, suspension de roue**

MITSUBISHI COLT IV (CA_A),COLT V (CJ_A),LANCER Stufenheck (CS_A),LANCER V (CB/D_A),LANCER V Station Wagon (CB_W, CD_W),LANCER VI (CK/P_A),VOLVO S40 I (VS),V40 Kombi (VW)

59397 **Lenker, Radaufhängung, Track Control Arm, Bras de liaison, suspension de roue**

MITSUBISHI COLT IV (CA_A),COLT V (CJ_A),LANCER Stufenheck (CS_A),LANCER V (CB/D_A),LANCER V Station Wagon (CB_W, CD_W),LANCER VI (CK/P_A),VOLVO S40 I (VS),V40 Kombi (VW)

59398 **Lenker, Radaufhängung, Track Control Arm, Bras de liaison, suspension de roue**

MITSUBISHI ECLIPSE I (D2_A),GALANT V (E5_A, E7_A, E8_A),GALANT V Stufenheck (E5_A, E7_A, E8_A),GALANT VI (EA_),GALANT VI Station Wagon (EA_)

59399	**Lenker, Radaufhängung, Track Control Arm, Bras de liaison, suspension de roue**
	MITSUBISHI ECLIPSE I (D2_A),GALANT V (E5_A, E7_A, E8_A),GALANT V Stufenheck (E5_A, E7_A, E8_A),GALANT VI (EA_),GALANT VI Station Wagon (EA_)
59500	**Stange/Strebe, Stabilisator, Link Stabiliser, Entretoise/tige, stabilisateur**
	HONDA ACCORD VII Aerodeck (CM_),ACCORD VII (CG, CK),ACCORD VII Coupe (CG),ACCORD VII Hatchback (CH)
59501	**Stange/Strebe, Stabilisator, Link Stabiliser, Entretoise/tige, stabilisateur**
	HONDA ACCORD VII Aerodeck (CM_),ACCORD VII (CG, CK),ACCORD VII Coupe (CG),ACCORD VII Hatchback (CH)
59502	**Stange/Strebe, Stabilisator, Link Stabiliser, Entretoise/tige, stabilisateur**
	HONDA ACCORD VII (CG, CK)
59502HPS	**Stange/Strebe, Stabilisator, Link Stabiliser, Entretoise/tige, stabilisateur**
	HONDA ACCORD VII (CG, CK)
59503HPS	**Stange/Strebe, Stabilisator, Link Stabiliser, Entretoise/tige, stabilisateur**
	HONDA ACCORD VII (CG, CK)
59506	**Lenker, Radaufhängung, Track Control Arm, Bras de liaison, suspension de roue**
	HONDA CIVIC III Hatchback (EC, ED, EE),CIVIC III Stufenheck (ED),CRX II (ED, EE)
59507	**Lenker, Radaufhängung, Track Control Arm, Bras de liaison, suspension de roue**
	HONDA CIVIC III Hatchback (EC, ED, EE),CIVIC III Stufenheck (ED),CRX II (ED, EE)
59508	**Lenker, Radaufhängung, Track Control Arm, Bras de liaison, suspension de roue**
	ROVER 400 Hatchback (RT),400 (RT),45 (RT),45 Stufenheck (RT)
59509	**Lenker, Radaufhängung, Track Control Arm, Bras de liaison, suspension de roue**
	ROVER 400 Hatchback (RT),400 (RT),45 (RT),45 Stufenheck (RT)
59510	**Stange/Strebe, Stabilisator, Link Stabiliser, Entretoise/tige, stabilisateur**
	MITSUBISHI SPACE WAGON (N3_W, N4_W),SPACE WAGON (N5_W)
59510HPS	**Stange/Strebe, Stabilisator, Link Stabiliser, Entretoise/tige, stabilisateur**
	MITSUBISHI SPACE WAGON (N3_W, N4_W),SPACE WAGON (N5_W)
59511HPS	**Stange/Strebe, Stabilisator, Link Stabiliser, Entretoise/tige, stabilisateur**
	MITSUBISHI SPACE WAGON (N3_W, N4_W),SPACE WAGON (N5_W)
59512	**Axialgelenk, Spurstange, Inner Tie Rod, Rotule de direction intérieure, barre de connexion**
	HONDA CIVIC V Aerodeck,CIVIC V (EJ9, EK3/4),CIVIC V Fastback (MB),CIVIC V Hatchback (EJ9, EK1/3/4)
59513	**Axialgelenk, Spurstange, Inner Tie Rod, Rotule de direction intérieure, barre de connexion**
	HONDA CR-V I (RD),CR-V II (RD_)
59514	**Axialgelenk, Spurstange, Inner Tie Rod, Rotule de direction intérieure, barre de connexion**
	HONDA ACCORD VII Aerodeck (CM_),ACCORD VII (CG, CK),ACCORD VII Coupe (CG),ACCORD VII Hatchback (CH)
59515	**Spurstangenkopf, Tie Rod End, Rotule de barre de connexion**
	HONDA HR-V (GH),LOGO (GA3)
59516HPS	**Stange/Strebe, Stabilisator, Link Stabiliser, Entretoise/tige, stabilisateur**
	ROVER 75 (RJ),75 Tourer (RJ)
59517HPS	**Stange/Strebe, Stabilisator, Link Stabiliser, Entretoise/tige, stabilisateur**
	MG MG ZT,MG ZT- T,ROVER 75 (RJ),75 Tourer (RJ)
59518HPS	**Stange/Strebe, Stabilisator, Link Stabiliser, Entretoise/tige, stabilisateur**
	MG MG ZT,MG ZT- T,ROVER 75 (RJ),75 Tourer (RJ)
59520	**Trag-/Führungsgelenk, Ball Joint, Rotule de suspension**
	FORD MAVERICK (UDS, UNS),NISSAN PICK UP (D21),TERRANO I (WD21),TERRANO II (R20)
59521	**Trag-/Führungsgelenk, Ball Joint, Rotule de suspension**
	INFINITI I30,J30,M30 Convertible,M30 Coupe,NISSAN BLUEBIRD Hatchback (T72, T12),BLUEBIRD Station Wagon (WU11),BLUEBIRD (T72 , T12),BLUEBIRD (U11),MAXIMA (J30),MAXIMA QX (A32),MAXIMA Station Wagon,PRAIRIE (M10, NM10),PRAIRIE PRO (M11),PRIMERA Traveller (W10)
59522	**Trag-/Führungsgelenk, Ball Joint, Rotule de suspension**
	NISSAN ALMERA I Hatchback (N15),ALMERA I (N15)
59523	**Trag-/Führungsgelenk, Ball Joint, Rotule de suspension**
	NISSAN VANETTE Bus (C22),VANETTE Bus (KC120),VANETTE Kasten (C22)
59524	**Spurstangenkopf, Tie Rod End, Rotule de barre de connexion**
	NISSAN ALMERA I Hatchback (N15),ALMERA I (N15),MAXIMA QX (A32)
59525	**Axialgelenk, Spurstange, Inner Tie Rod, Rotule de direction intérieure, barre de connexion**
	NISSAN MAXIMA QX (A32)
59526	**Spurstangenkopf, Tie Rod End, Rotule de barre de connexion**
	NISSAN TERRANO I (WD21),TERRANO II (R20)
59527	**Spurstangenkopf, Tie Rod End, Rotule de barre de connexion**
	NISSAN VANETTE Bus (C22),VANETTE Kasten (C22)

59528	**Spurstangenkopf, Tie Rod End, Rotule de barre de connexion**
	NISSAN PICK UP (D21),TERRANO I (WD21),TERRANO II (R20)
59533	**Stange/Strebe, Stabilisator, Link Stabiliser, Entretoise/tige, stabilisateur**
	MAZDA 121 III (JASM, JBSM)
59534	**Stange/Strebe, Stabilisator, Link Stabiliser, Entretoise/tige, stabilisateur**
	MAZDA MX-3 (EC)
59535HPS	**Stange/Strebe, Stabilisator, Link Stabiliser, Entretoise/tige, stabilisateur**
	MAZDA 626 V (GF),626 V Hatchback (GF),626 V Station Wagon (GW)
59536	**Axialgelenk, Spurstange, Inner Tie Rod, Rotule de direction intérieure, barre de connexion**
	MITSUBISHI CARISMA (DA_),CARISMA Stufenheck (DA_)
59537	**Stange/Strebe, Stabilisator, Link Stabiliser, Entretoise/tige, stabilisateur**
	MITSUBISHI SPACE RUNNER (N50),SPACE WAGON (N3_W, N4_W),SPACE WAGON (N5_W)
59537HPS	**Stange/Strebe, Stabilisator, Link Stabiliser, Entretoise/tige, stabilisateur**
	MITSUBISHI SPACE RUNNER (N50),SPACE WAGON (N3_W, N4_W),SPACE WAGON (N5_W)
59538	**Stange/Strebe, Stabilisator, Link Stabiliser, Entretoise/tige, stabilisateur**
	MITSUBISHI SPACE RUNNER (N50),SPACE WAGON (N3_W, N4_W),SPACE WAGON (N5_W)
59538HPS	**Stange/Strebe, Stabilisator, Link Stabiliser, Entretoise/tige, stabilisateur**
	MITSUBISHI SPACE RUNNER (N50),SPACE WAGON (N3_W, N4_W),SPACE WAGON (N5_W)
59539	**Trag-/Führungsgelenk, Ball Joint, Rotule de suspension**
	MITSUBISHI L 200 (K__T)
59540HPS	**Stange/Strebe, Stabilisator, Link Stabiliser, Entretoise/tige, stabilisateur**
	MITSUBISHI LANCER IV (C6_A, C7_A),LANCER IV Stufenheck (C6_A)
59541HPS	**Stange/Strebe, Stabilisator, Link Stabiliser, Entretoise/tige, stabilisateur**
	MITSUBISHI GALANT V (E5_A, E7_A, E8_A),GALANT V Stufenheck (E5_A, E7_A, E8_A),GALANT VI (EA_),GALANT VI Station Wagon (EA_)
59542	**Stange/Strebe, Stabilisator, Link Stabiliser, Entretoise/tige, stabilisateur**
	MITSUBISHI GALANT V (E5_A, E7_A, E8_A),GALANT V Stufenheck (E5_A, E7_A, E8_A)
59543HPS	**Stange/Strebe, Stabilisator, Link Stabiliser, Entretoise/tige, stabilisateur**
	MITSUBISHI GALANT VI (EA_),GALANT VI Station Wagon (EA_)
59544	**Stange/Strebe, Stabilisator, Link Stabiliser, Entretoise/tige, stabilisateur**
	MITSUBISHI SPACE GEAR (PA/B/D_V/W)
59545HPS	**Stange/Strebe, Stabilisator, Link Stabiliser, Entretoise/tige, stabilisateur**
	MITSUBISHI L 400 Bus (PAOV),L 400 Kasten (PAOV),SPACE GEAR (PA/B/D_V/W),SPACE WAGON (N3_W, N4_W)
59546	**Stange/Strebe, Stabilisator, Link Stabiliser, Entretoise/tige, stabilisateur**
	MITSUBISHI PAJERO II Canvas Top (V2_W, V4_W),PAJERO II (V2_W, V4_W)
59547	**Stange/Strebe, Stabilisator, Link Stabiliser, Entretoise/tige, stabilisateur**
	MITSUBISHI PAJERO II Canvas Top (V2_W, V4_W),PAJERO II (V2_W, V4_W)
59551	**Stange/Strebe, Stabilisator, Link Stabiliser, Entretoise/tige, stabilisateur**
	HYUNDAI SONATA II (Y-3)
59552HPS	**Stange/Strebe, Stabilisator, Link Stabiliser, Entretoise/tige, stabilisateur**
	HYUNDAI SONATA I (Y-2)
59553	**Axialgelenk, Spurstange, Inner Tie Rod, Rotule de direction intérieure, barre de connexion**
	HYUNDAI ATOS (MX),ATOS PRIME (MX)
59554	**Axialgelenk, Spurstange, Inner Tie Rod, Rotule de direction intérieure, barre de connexion**
	HYUNDAI COUPE (GK),COUPE (RD),ELANTRA Stufenheck (XD),ELANTRA (XD),KIA CERATO (LD),CERATO Stufenheck (LD)
59555	**Axialgelenk, Spurstange, Inner Tie Rod, Rotule de direction intérieure, barre de connexion**
	HYUNDAI SONATA II (Y-3),TRAJET (FO)
59556	**Axialgelenk, Spurstange, Inner Tie Rod, Rotule de direction intérieure, barre de connexion**
	HYUNDAI SONATA III (EF),SONATA IV (EU4),XG,KIA MAGENTIS (GD)
59557	**Axialgelenk, Spurstange, Inner Tie Rod, Rotule de direction intérieure, barre de connexion**
	HONDA CIVIC IV Coupe (EJ),CIVIC IV (EG, EH),CIVIC IV Fastback (MA, MB),CIVIC IV Hatchback (EG),CRX III (EH, EG),INTEGRA Coupe (DC2, DC4)
59558	**Axialgelenk, Spurstange, Inner Tie Rod, Rotule de direction intérieure, barre de connexion**
	HONDA HR-V (GH)
59560	**Spurstangenkopf, Tie Rod End, Rotule de barre de connexion**
	TOYOTA YARIS (_CP10),YARIS VERSO (NC/LP2_)
59561	**Spurstangenkopf, Tie Rod End, Rotule de barre de connexion**
	TOYOTA YARIS (_CP10),YARIS VERSO (NC/LP2_)
59562	**Trag-/Führungsgelenk, Ball Joint, Rotule de suspension**
	TOYOTA YARIS (_CP10)

59563	**Trag-/Führungsgelenk, Ball Joint, Rotule de suspension**
	TOYOTA STARLET (_P7_),STARLET (_P8_)
59564	**Trag-/Führungsgelenk, Ball Joint, Rotule de suspension**
	TOYOTA PASEO Cabriolet (EL54),PASEO Coupe (EL54),STARLET (EP91),STARLET (_P8_)
59565	**Trag-/Führungsgelenk, Ball Joint, Rotule de suspension**
	TOYOTA CARINA II Station Wagon (_T17_),CARINA II Stufenheck (_T15_),CARINA II Stufenheck (_T17_),CARINA II (_T15_),CARINA II (_T17_),CELICA Cabriolet (_T16_),CELICA Coupe (T16F),CELICA Liftback (T16),CELICA (ST16_)
59566	**Trag-/Führungsgelenk, Ball Joint, Rotule de suspension**
	TOYOTA PREVIA (TCR1_, 2_)
59567	**Trag-/Führungsgelenk, Ball Joint, Rotule de suspension**
	TOYOTA CAMRY Station Wagon (_V10),CAMRY (_V1_)
59568	**Trag-/Führungsgelenk, Ball Joint, Rotule de suspension**
	TOYOTA PASEO Cabriolet (EL54),PASEO Coupe (EL54),STARLET (EP91),STARLET (_P8_)
59569	**Trag-/Führungsgelenk, Ball Joint, Rotule de suspension**
	TOYOTA HILUX Pick-up (_N_),VW TARO
59570	**Axialgelenk, Spurstange, Inner Tie Rod, Rotule de direction intérieure, barre de connexion**
	HYUNDAI ACCENT Stufenheck (X-3),ACCENT (X-3)
59571	**Axialgelenk, Spurstange, Inner Tie Rod, Rotule de direction intérieure, barre de connexion**
	HYUNDAI ACCENT (LC),ACCENT Stufenheck (LC),H100 Bus (P),H100 Kasten
59572	**Axialgelenk, Spurstange, Inner Tie Rod, Rotule de direction intérieure, barre de connexion**
	HYUNDAI ACCENT (LC),ACCENT Stufenheck (LC),H100 Bus (P),H100 Kasten
59573	**Axialgelenk, Spurstange, Inner Tie Rod, Rotule de direction intérieure, barre de connexion**
	HYUNDAI COUPE (GK),COUPE (RD),LANTRA II (J-2),LANTRA II Wagon (J2)
59574	**Axialgelenk, Spurstange, Inner Tie Rod, Rotule de direction intérieure, barre de connexion**
	HYUNDAI ACCENT Stufenheck (X-3),ACCENT (X-3),S COUPE (SLC)
59575	**Axialgelenk, Spurstange, Inner Tie Rod, Rotule de direction intérieure, barre de connexion**
	HYUNDAI PONY (X-2),PONY/EXCEL Stufenheck (X-2)
59576	**Lenker, Radaufhängung, Track Control Arm, Bras de liaison, suspension de roue**
	HYUNDAI PONY/EXCEL Stufenheck (X-2),S COUPE (SLC)
59576/1	**Lenker, Radaufhängung, Track Control Arm, Bras de liaison, suspension de roue**
	HYUNDAI PONY/EXCEL Stufenheck (X-2),S COUPE (SLC)
59577	**Lenker, Radaufhängung, Track Control Arm, Bras de liaison, suspension de roue**
	HYUNDAI PONY/EXCEL Stufenheck (X-2),S COUPE (SLC)
59577/1	**Lenker, Radaufhängung, Track Control Arm, Bras de liaison, suspension de roue**
	HYUNDAI PONY/EXCEL Stufenheck (X-2),S COUPE (SLC)
59578	**Stange/Strebe, Stabilisator, Link Stabiliser, Entretoise/tige, stabilisateur**
	HYUNDAI STAREX (H1)
59579HPS	**Stange/Strebe, Stabilisator, Link Stabiliser, Entretoise/tige, stabilisateur**
	HYUNDAI H-1 Kasten,H-1 Pritsche/Fahrgestell,H-1 Starex (KMF),STAREX (H1)
59580	**Trag-/Führungsgelenk, Ball Joint, Rotule de suspension**
	HYUNDAI ATOS (MX),ATOS PRIME (MX)
59581	**Stange/Strebe, Stabilisator, Link Stabiliser, Entretoise/tige, stabilisateur**
	HYUNDAI SONATA II (Y-3)
59582HPS	**Stange/Strebe, Stabilisator, Link Stabiliser, Entretoise/tige, stabilisateur**
	HYUNDAI SONATA III (EF)
59583	**Stange/Strebe, Stabilisator, Link Stabiliser, Entretoise/tige, stabilisateur**
	HYUNDAI SONATA III (EF),SONATA IV (EU4),XG,KIA MAGENTIS (GD),OPIRUS (GH)
59584	**Stange/Strebe, Stabilisator, Link Stabiliser, Entretoise/tige, stabilisateur**
	HYUNDAI SONATA III (EF)
59585	**Trag-/Führungsgelenk, Ball Joint, Rotule de suspension**
	HYUNDAI SONATA II (Y-3)
59586	**Spurstangenkopf, Tie Rod End, Rotule de barre de connexion**
	HYUNDAI ACCENT (LC),ELANTRA Stufenheck (XD),ELANTRA (XD)
59589	**Stange/Strebe, Stabilisator, Link Stabiliser, Entretoise/tige, stabilisateur**
	KIA SHUMA (FB),SHUMA Stufenheck (FB)
59590	**Stange/Strebe, Stabilisator, Link Stabiliser, Entretoise/tige, stabilisateur**
	KIA CLARUS Kombi (GC),CLARUS (K9A)
59591	**Stange/Strebe, Stabilisator, Link Stabiliser, Entretoise/tige, stabilisateur**
	KIA CLARUS Kombi (GC),CLARUS (K9A)

59592	**Stange/Strebe, Stabilisator, Link Stabiliser, Entretoise/tige, stabilisateur**
	KIA CLARUS (K9A)
59593	**Axialgelenk, Spurstange, Inner Tie Rod, Rotule de direction intérieure, barre de connexion**
	NISSAN SERENA (C23M),VANETTE CARGO Bus (HC 23),VANETTE CARGO Kasten (HC 23)
59594HPS	**Stange/Strebe, Stabilisator, Link Stabiliser, Entretoise/tige, stabilisateur**
	KIA CARENS I (FC),CARENS II (FJ),CARENS III (UN),SHUMA (FB),SHUMA II (FB),SHUMA II Stufenheck (FB),SHUMA Stufenheck (FB)
59595	**Stange/Strebe, Stabilisator, Link Stabiliser, Entretoise/tige, stabilisateur**
	SUBARU LEGACY I Station Wagon (BC, BJF)
59596	**Stange/Strebe, Stabilisator, Link Stabiliser, Entretoise/tige, stabilisateur**
	SUBARU IMPREZA Coupe (GFC),IMPREZA Station Wagon (GD, GG),IMPREZA Station Wagon (GF),IMPREZA Stufenheck (GC),IMPREZA Stufenheck (GD, GG),LEGACY I (BC),LEGACY I Station Wagon (BC, BJF),LEGACY II (BD, BG),LEGACY II Station Wagon (BD, BG)
59597	**Stange/Strebe, Stabilisator, Link Stabiliser, Entretoise/tige, stabilisateur**
	SUBARU IMPREZA Coupe (GFC)
59598	**Trag-/Führungsgelenk, Ball Joint, Rotule de suspension**
	NISSAN SERENA (C23M),VANETTE CARGO Bus (HC 23),VANETTE CARGO Kasten (HC 23)
59599	**Trag-/Führungsgelenk, Ball Joint, Rotule de suspension**
	NISSAN SERENA (C23M),VANETTE CARGO Bus (HC 23),VANETTE CARGO Kasten (HC 23)
59600	**Spurstangenkopf, Tie Rod End, Rotule de barre de connexion**
	BMW X5 (E53)
59601	**Spurstange, Rod Assembly, Barre de connexion**
	BMW X5 (E53)
59602	**Trag-/Führungsgelenk, Ball Joint, Rotule de suspension**
	BMW X5 (E53)
59603	**Stange/Strebe, Stabilisator, Link Stabiliser, Entretoise/tige, stabilisateur**
	BMW X5 (E53)
59603HPS	**Stange/Strebe, Stabilisator, Link Stabiliser, Entretoise/tige, stabilisateur**
	BMW X5 (E53)
59604	**Stange/Strebe, Stabilisator, Link Stabiliser, Entretoise/tige, stabilisateur**
	BMW X5 (E53)
59604HPS	**Stange/Strebe, Stabilisator, Link Stabiliser, Entretoise/tige, stabilisateur**
	BMW X5 (E53)
59605HPS	**Stange/Strebe, Stabilisator, Link Stabiliser, Entretoise/tige, stabilisateur**
	BMW X5 (E53)
59606	**Lenker, Radaufhängung, Track Control Arm, Bras de liaison, suspension de roue**
	BMW X5 (E53)
59607	**Lenker, Radaufhängung, Track Control Arm, Bras de liaison, suspension de roue**
	BMW X5 (E53)
59608	**Lenker, Radaufhängung, Track Control Arm, Bras de liaison, suspension de roue**
	BMW X5 (E53)
59609	**Lenker, Radaufhängung, Track Control Arm, Bras de liaison, suspension de roue**
	BMW X5 (E53)
59610	**Axialgelenk, Spurstange, Inner Tie Rod, Rotule de direction intérieure, barre de connexion**
	BMW X5 (E53)
59611	**Lenker, Radaufhängung, Track Control Arm, Bras de liaison, suspension de roue**
	BMW X5 (E53)
59612	**Lenker, Radaufhängung, Track Control Arm, Bras de liaison, suspension de roue**
	BMW X5 (E53)
59613HPS	**Stange/Strebe, Stabilisator, Link Stabiliser, Entretoise/tige, stabilisateur**
	BMW Z3,Z3 Coupe,3 Cabriolet (E36),3 Coupe (E36),3 (E36)
59614HPS	**Stange/Strebe, Stabilisator, Link Stabiliser, Entretoise/tige, stabilisateur**
	MINI MINI Cabriolet (R52),MINI (R50, R53),MINI (R56)
59615	**Lenker, Radaufhängung, Track Control Arm, Bras de liaison, suspension de roue**
	ALPINA B10 (E39),B10 Kombi (E39),BMW 5 (E39),5 Touring (E39)
59616	**Lenker, Radaufhängung, Track Control Arm, Bras de liaison, suspension de roue**
	BMW 5 (E39),5 Touring (E39)
59617	**Lenker, Radaufhängung, Track Control Arm, Bras de liaison, suspension de roue**
	BMW 5 (E39),5 Touring (E39)
59618	**Lenker, Radaufhängung, Track Control Arm, Bras de liaison, suspension de roue**
	BMW 5 (E39),5 Touring (E39)

59619	**Lenker, Radaufhängung, Track Control Arm, Bras de liaison, suspension de roue**
	BMW 5 (E39),5 Touring (E39)
59620	**Lenker, Radaufhängung, Track Control Arm, Bras de liaison, suspension de roue**
	BMW 5 (E39),5 Touring (E39)
59621	**Lagerung, Lenker, Control Arm-/Trailing Arm Bush, Suspension, bras de liaison**
	BMW Z4 (E85),3 Cabriolet (E36),3 Cabriolet (E46),3 Compact (E46),3 Coupe (E36),3 Coupe (E46),3 (E36),3 (E46),3 Touring (E36),3 Touring (E46)
59622	**Lagerung, Lenker, Control Arm-/Trailing Arm Bush, Suspension, bras de liaison**
	BMW X5 (E53),Z8,5 (E39),5 (E60),5 Touring (E39),5 Touring (E61),6 (E63),7 (E38),7 (E65, E66)
59623HPS	**Stange/Strebe, Stabilisator, Link Stabiliser, Entretoise/tige, stabilisateur**
	BMW 7 (E65, E66)
59624	**Spurstange, Rod Assembly, Barre de connexion**
	ALPINA B10 (E39),B10 Kombi (E39),BMW 5 (E39),5 Touring (E39)
59626	**Spurstangenkopf, Tie Rod End, Rotule de barre de connexion**
	BMW 5 (E60),5 Touring (E61),6 Cabriolet (E64),6 (E63),7 (E65, E66)
59627	**Spurstangensatz, Track Rod Set, Kit de barres de connexion**
	BMW 5 (E34),5 Touring (E34)
59628HPS	**Stange/Strebe, Stabilisator, Link Stabiliser, Entretoise/tige, stabilisateur**
	ALPINA B10 (E39),B10 Kombi (E39),BMW 5 (E39),5 Touring (E39)
59629	**Lenker, Radaufhängung, Track Control Arm, Bras de liaison, suspension de roue**
	BMW 6 (E63),7 (E65, E66)
59630	**Lenker, Radaufhängung, Track Control Arm, Bras de liaison, suspension de roue**
	BMW 6 (E63),7 (E65, E66)
59631HPS	**Stange/Strebe, Stabilisator, Link Stabiliser, Entretoise/tige, stabilisateur**
	BMW 7 (E65, E66)
59632	**Stange/Strebe, Stabilisator, Link Stabiliser, Entretoise/tige, stabilisateur**
	BMW 7 (E65, E66)
59633	**Lenker, Radaufhängung, Track Control Arm, Bras de liaison, suspension de roue**
	BMW 7 (E65, E66)
59634	**Lenker, Radaufhängung, Track Control Arm, Bras de liaison, suspension de roue**
	BMW 7 (E65, E66)
59635	**Lenker, Radaufhängung, Track Control Arm, Bras de liaison, suspension de roue**
	BMW 5 (E60),5 Touring (E61),6 Cabriolet (E64),6 (E63),7 (E65, E66),BRILLIANCE BMW 5 SERIES (E60)
59636	**Lenker, Radaufhängung, Track Control Arm, Bras de liaison, suspension de roue**
	BMW 5 (E60),5 Touring (E61),6 Cabriolet (E64),6 (E63),7 (E65, E66),BRILLIANCE BMW 5 SERIES (E60)
59637	**Lenker, Radaufhängung, Track Control Arm, Bras de liaison, suspension de roue**
	BMW 5 (E39),5 (E60),5 Touring (E39),5 Touring (E61),7 (E65, E66)
59638	**Lenker, Radaufhängung, Track Control Arm, Bras de liaison, suspension de roue**
	BMW Z1,3 Cabriolet (E36),3 Cabriolet (E46),3 Compact (E46),3 Coupe (E36),3 Coupe (E46),3 (E36),3 (E46),3 Touring (E36),3 Touring (E46)
59639	**Stange/Strebe, Stabilisator, Link Stabiliser, Entretoise/tige, stabilisateur**
	BMW 7 (E65, E66)
59640	**Spurstangenkopf, Tie Rod End, Rotule de barre de connexion**
	FORD TRANSIT Bus,TRANSIT Bus (FD_ _, FB_ _, FS_ _, FZ_ _, FC_ _),TRANSIT Kasten,TRANSIT Kasten (FA_ _),TRANSIT Pritsche/Fahrgestell,TRANSIT Pritsche/Fahrgestell (FM_ _, FN_ _),TRANSIT TOURNEO
59641	**Axialgelenk, Spurstange, Inner Tie Rod, Rotule de direction intérieure, barre de connexion**
	FORD TRANSIT Bus (FD_ _, FB_ _, FS_ _, FZ_ _, FC_ _),TRANSIT Kasten (FA_ _),TRANSIT Pritsche/Fahrgestell (FM_ _, FN_ _)
59642	**Axialgelenk, Spurstange, Inner Tie Rod, Rotule de direction intérieure, barre de connexion**
	FORD TRANSIT Bus (FD_ _, FB_ _, FS_ _, FZ_ _, FC_ _),TRANSIT Kasten (FA_ _),TRANSIT Pritsche/Fahrgestell (FM_ _, FN_ _)
59643	**Trag-/Führungsgelenk, Ball Joint, Rotule de suspension**
	FORD TOURNEO CONNECT,TRANSIT Bus (FD_ _, FB_ _, FS_ _, FZ_ _, FC_ _),TRANSIT CONNECT (P65_, P70_, P80_),TRANSIT Kasten (E_ _),TRANSIT Kasten (FA_ _),TRANSIT Pritsche/Fahrgestell (E_ _),TRANSIT Pritsche/Fahrgestell (FM_ _, FN_ _)
59644	**Lenker, Radaufhängung, Track Control Arm, Bras de liaison, suspension de roue**
	FORD MONDEO III (B5Y),MONDEO III Kombi (BWY),MONDEO III Stufenheck (B4Y),JAGUAR X-TYPE (CF1),X-TYPE Estate
59645	**Lenker, Radaufhängung, Track Control Arm, Bras de liaison, suspension de roue**
	FORD MONDEO III (B5Y),MONDEO III Kombi (BWY),MONDEO III Stufenheck (B4Y),JAGUAR X-TYPE (CF1),X-TYPE Estate
59646	**Lenker, Radaufhängung, Track Control Arm, Bras de liaison, suspension de roue**
	FORD FOCUS C-MAX,FOCUS (DAW, DBW),FOCUS II (DA_),FOCUS II Stufenheck (DA_),FOCUS Stufenheck (DFW),MAZDA 3 (BK),3 Stufenheck (BK),5 (CR19),VOLVO S40 II (MS),V50 (MW)
59647	**Lenker, Radaufhängung, Track Control Arm, Bras de liaison, suspension de roue**
	FORD C-MAX,FOCUS C-MAX,FOCUS (DAW, DBW),FOCUS II (DA_),FOCUS II Stufenheck (DA_),FOCUS II Turnier (DAW_),FOCUS Kombi (DNW),FOCUS Stufenheck (DFW),MAZDA 3 (BK),3 Stufenheck (BK),5 (CR19),VOLVO C30,C70 II Cabriolet,S40 II (MS),V50 (MW)

59648 **Stange/Strebe, Stabilisator, Link Stabiliser, Entretoise/tige, stabilisateur**

FORD FOCUS (DAW, DBW),FOCUS Kombi (DNW),FOCUS Stufenheck (DFW)

59650 **Lenker, Radaufhängung, Track Control Arm, Bras de liaison, suspension de roue**

FORD FIESTA V (JH_, JD_),FUSION (JU_),MAZDA 2 (DY)

59651 **Lenker, Radaufhängung, Track Control Arm, Bras de liaison, suspension de roue**

FORD FIESTA V (JH_, JD_),FUSION (JU_),MAZDA 2 (DY)

59654 **Lenker, Radaufhängung, Track Control Arm, Bras de liaison, suspension de roue**

FORD TRANSIT Bus (E_ _),TRANSIT Kasten (E_ _),TRANSIT Pritsche/Fahrgestell (E_ _)

59655 **Lenker, Radaufhängung, Track Control Arm, Bras de liaison, suspension de roue**

FORD TRANSIT Bus (E_ _),TRANSIT Kasten (E_ _),TRANSIT Pritsche/Fahrgestell (E_ _)

59657 **Spurstangenkopf, Tie Rod End, Rotule de barre de connexion**

FORD SCORPIO II (GFR, GGR),SCORPIO II Kombi (GNR, GGR)

59658 **Spurstangenkopf, Tie Rod End, Rotule de barre de connexion**

FORD TRANSIT Bus (T_ _),TRANSIT Bus (V_ _),TRANSIT Bus (72E, 73E),TRANSIT Kasten (T_ _),TRANSIT Kasten (V_ _),TRANSIT Kasten (72E, 71E),TRANSIT Kasten (81E),TRANSIT Pritsche/Fahrgestell (T_ _),TRANSIT Pritsche/Fahrgestell (V_ _),TRANSIT Pritsche/Fahrgestell (74E)

59661 **Lenker, Radaufhängung, Track Control Arm, Bras de liaison, suspension de roue**

FORD TRANSIT Bus (FD_ _, FB_ _, FS_ _, FZ_ _, FC_ _),TRANSIT Kasten (FA_ _),TRANSIT Pritsche/Fahrgestell (FM_ _, FN_ _)

59662 **Lenker, Radaufhängung, Track Control Arm, Bras de liaison, suspension de roue**

FORD TRANSIT Bus (FD_ _, FB_ _, FS_ _, FZ_ _, FC_ _),TRANSIT Kasten (FA_ _),TRANSIT Pritsche/Fahrgestell (FM_ _, FN_ _)

59663 **Axialgelenk, Spurstange, Inner Tie Rod, Rotule de direction intérieure, barre de connexion**

FORD FIESTA V (JH_, JD_),FUSION (JU_),MAZDA 2 (DY)

59664HPS **Stange/Strebe, Stabilisator, Link Stabiliser, Entretoise/tige, stabilisateur**

CHANGAN FORD FOCUS Schrägheck (CD5),FOCUS Stufenheck (CD4),CHANGAN MAZDA 3 Stufenheck,FORD C-MAX,FOCUS C-MAX,FOCUS II Cabriolet,FOCUS II (DA_),FOCUS II Stufenheck (DA_),FOCUS II Turnier (DAW_),KUGA,MAZDA 3 (BK),3 Stufenheck (BK),5 (CR19),VOLVO C30,C70 II Cabriolet,S40 II (MS),V50 (MW)

59665 **Spurstangenkopf, Tie Rod End, Rotule de barre de connexion**

FORD SCORPIO II (GFR, GGR),SCORPIO II Kombi (GNR, GGR)

59666 **Axialgelenk, Spurstange, Inner Tie Rod, Rotule de direction intérieure, barre de connexion**

FORD MONDEO III (B5Y),MONDEO III Kombi (BWY),MONDEO III Stufenheck (B4Y)

59667 **Stange/Strebe, Stabilisator, Link Stabiliser, Entretoise/tige, stabilisateur**

FORD TRANSIT Bus (T_ _),TRANSIT Kasten (T_ _),TRANSIT Pritsche/Fahrgestell (T_ _)

59668 **Lenker, Radaufhängung, Track Control Arm, Bras de liaison, suspension de roue**

CHANGAN FORD FOCUS Schrägheck (CD5),FOCUS Stufenheck (CD4),CHANGAN MAZDA 3 Stufenheck,FORD C-MAX,FOCUS C-MAX,FOCUS (DAW, DBW),FOCUS II (DA_),FOCUS II Stufenheck (DA_),FOCUS II Turnier (DAW_),FOCUS Kombi (DNW),FOCUS Stufenheck (DFW),MAZDA 3 (BK),3 Stufenheck (BK),5 (CR19),VOLVO C30,C70 II Cabriolet,S40 II (MS),V50 (MW)

59669 **Spurstangenkopf, Tie Rod End, Rotule de barre de connexion**

FORD FIESTA V (JH_, JD_),FUSION (JU_),MAZDA 2 (DY)

59670 **Spurstangenkopf, Tie Rod End, Rotule de barre de connexion**

FORD FIESTA V (JH_, JD_),FUSION (JU_),MAZDA 2 (DY)

59671 **Trag-/Führungsgelenk, Ball Joint, Rotule de suspension**

FORD FIESTA V (JH_, JD_),FUSION (JU_),MAZDA 2 (DY)

59672 **Spurstangenkopf, Tie Rod End, Rotule de barre de connexion**

FORD MONDEO III (B5Y),MONDEO III Kombi (BWY),MONDEO III Stufenheck (B4Y),JAGUAR X-TYPE (CF1),X-TYPE Estate

59673 **Trag-/Führungsgelenk, Ball Joint, Rotule de suspension**

FORD MONDEO III (B5Y),MONDEO III Kombi (BWY),MONDEO III Stufenheck (B4Y),JAGUAR X-TYPE (CF1),X-TYPE Estate

59674 **Lenker, Radaufhängung, Track Control Arm, Bras de liaison, suspension de roue**

FORD TOURNEO CONNECT,TRANSIT CONNECT (P65_, P70_, P80_)

59675 **Lenker, Radaufhängung, Track Control Arm, Bras de liaison, suspension de roue**

FORD TRANSIT CONNECT (P65_, P70_, P80_)

59676 **Spurstangenkopf, Tie Rod End, Rotule de barre de connexion**

FORD TOURNEO CONNECT,TRANSIT CONNECT (P65_, P70_, P80_)

59678 **Stange/Strebe, Stabilisator, Link Stabiliser, Entretoise/tige, stabilisateur**

LAND ROVER DEFENDER (LD),DEFENDER Station Wagon (LD)

59679 **Stange/Strebe, Stabilisator, Link Stabiliser, Entretoise/tige, stabilisateur**

LAND ROVER RANGE ROVER II (LP)

59680 **Spurstangenkopf, Tie Rod End, Rotule de barre de connexion**

LAND ROVER DEFENDER (LD),DEFENDER Pick-up (LD_),DEFENDER Station Wagon (LD),DISCOVERY I (LJ, LG),DISCOVERY II (LJ, LT),RANGE ROVER I (AE, AN, HAA, HAB, HAM, HBM, RE, RN),90/110 (DHMC)

59681 **Spurstangenkopf, Tie Rod End, Rotule de barre de connexion**

LAND ROVER DEFENDER (LD),DEFENDER Pick-up (LD_),DEFENDER Station Wagon (LD),DISCOVERY I (LJ, LG),DISCOVERY II (LJ, LT),RANGE ROVER I (AE, AN, HAA, HAB, HAM, HBM, RE, RN),90/110 (DHMC)

59682 **Trag-/Führungsgelenk, Ball Joint, Rotule de suspension**

LAND ROVER DEFENDER (LD),DEFENDER Pick-up (LD_),DEFENDER Station Wagon (LD),DISCOVERY I (LJ, LG),DISCOVERY II (LJ, LT),RANGE ROVER I (AE, AN, HAA, HAB, HAM, HBM, RE, RN),90/110 (DHMC)

59683 **Trag-/Führungsgelenk, Ball Joint, Rotule de suspension**

LAND ROVER DEFENDER (LD),DEFENDER Pick-up (LD_),DEFENDER Station Wagon (LD),DISCOVERY I (LJ, LG),RANGE ROVER I (AE, AN, HAA, HAB, HAM, HBM, RE, RN),90/110 (DHMC)

59684 **Spurstangenkopf, Tie Rod End, Rotule de barre de connexion**

LAND ROVER FREELANDER (LN),FREELANDER Soft Top

59685 **Spurstangenkopf, Tie Rod End, Rotule de barre de connexion**

LAND ROVER FREELANDER (LN),FREELANDER Soft Top

59686 **Trag-/Führungsgelenk, Ball Joint, Rotule de suspension**

LAND ROVER FREELANDER (LN),FREELANDER Soft Top

59687 **Stange/Strebe, Stabilisator, Link Stabiliser, Entretoise/tige, stabilisateur**

LAND ROVER FREELANDER (LN),FREELANDER Soft Top

59688 **Lenker, Radaufhängung, Track Control Arm, Bras de liaison, suspension de roue**

LAND ROVER FREELANDER (LN),FREELANDER Soft Top

59689 **Lenker, Radaufhängung, Track Control Arm, Bras de liaison, suspension de roue**

LAND ROVER FREELANDER (LN),FREELANDER Soft Top

59690 **Spurstangenkopf, Tie Rod End, Rotule de barre de connexion**

MINI MINI (R50, R53)

59691 **Spurstangenkopf, Tie Rod End, Rotule de barre de connexion**

MINI MINI (R50, R53)

59692 **Spurstange, Rod Assembly, Barre de connexion**

MINI MINI (R50, R53)

59693 **Spurstange, Rod Assembly, Barre de connexion**

MINI MINI (R50, R53)

59694 **Stange/Strebe, Stabilisator, Link Stabiliser, Entretoise/tige, stabilisateur**

MINI MINI (R50, R53)

59695 **Stange/Strebe, Stabilisator, Link Stabiliser, Entretoise/tige, stabilisateur**

MINI MINI (R50, R53)

59697 **Stange/Strebe, Stabilisator, Link Stabiliser, Entretoise/tige, stabilisateur**

LAND ROVER DISCOVERY II (LJ, LT),DISCOVERY III (TAA)

59698 **Stange/Strebe, Stabilisator, Link Stabiliser, Entretoise/tige, stabilisateur**

LAND ROVER DISCOVERY II (LJ, LT),DISCOVERY III (TAA)

59707OES **Spurstangenkopf, Tie Rod End, Rotule de barre de connexion**

AUDI A4 Avant (8ED),A4 Avant (8E5, B6),A4 Cabriolet (8H7, 8HE),A4 (8EC),A4 (8E2, B6),A6 Allroad (4FH),A6 Avant (4B, C5),A6 Avant (4F5),A6 (4B, C5),A6 (4F2),SEAT EXEO ST (3R5),EXEO (3R2),SKODA SUPERB (3U4)

59711 **Axialgelenk, Spurstange, Inner Tie Rod, Rotule de direction intérieure, barre de connexion**

MAZDA 323 C V (BA),323 F V (BA),323 P V (BA),323 S V (BA)

59712 **Axialgelenk, Spurstange, Inner Tie Rod, Rotule de direction intérieure, barre de connexion**

MAZDA 626 V (GF),626 V Hatchback (GF),626 V Station Wagon (GW)

59713 **Axialgelenk, Spurstange, Inner Tie Rod, Rotule de direction intérieure, barre de connexion**

MAZDA MX-5 I (NA)

59714 **Axialgelenk, Spurstange, Inner Tie Rod, Rotule de direction intérieure, barre de connexion**

MAZDA PREMACY (CP)

59715 **Axialgelenk, Spurstange, Inner Tie Rod, Rotule de direction intérieure, barre de connexion**

MAZDA PREMACY (CP)

59716 **Axialgelenk, Spurstange, Inner Tie Rod, Rotule de direction intérieure, barre de connexion**

MAZDA XEDOS 9 (TA)

59717 **Axialgelenk, Spurstange, Inner Tie Rod, Rotule de direction intérieure, barre de connexion**

DAEWOO MATIZ (KLYA)

59718 **Axialgelenk, Spurstange, Inner Tie Rod, Rotule de direction intérieure, barre de connexion**

DAEWOO MATIZ (KLYA)

59719 **Axialgelenk, Spurstange, Inner Tie Rod, Rotule de direction intérieure, barre de connexion**

HYUNDAI ATOS (MX),ATOS PRIME (MX)

59770 **Axialgelenk, Spurstange, Inner Tie Rod, Rotule de direction intérieure, barre de connexion**

OPEL INSIGNIA,INSIGNIA Sports Tourer,INSIGNIA Stufenheck,VAUXHALL INSIGNIA,INSIGNIA Estate,INSIGNIA Sedan

59800 **Spurstange, Rod Assembly, Barre de connexion**

MERCEDES-BENZ E-KLASSE (W124),Stufenheck (W124)

59801 **Lenker, Radaufhängung, Track Control Arm, Bras de liaison, suspension de roue**

MERCEDES-BENZ VITO Bus (638)

59802 — **Lenker, Radaufhängung, Track Control Arm, Bras de liaison, suspension de roue**

MERCEDES-BENZ VITO Bus (638)

59804 — **Lenker, Radaufhängung, Track Control Arm, Bras de liaison, suspension de roue**

VW TRANSPORTER T4 Bus (70XB, 70XC, 7DB, 7DW),TRANSPORTER T4 Kasten (70XA),TRANSPORTER T4 Pritsche/Fahrgestell (70XD)

59805 — **Lenker, Radaufhängung, Track Control Arm, Bras de liaison, suspension de roue**

VW TRANSPORTER T4 Bus (70XB, 70XC, 7DB, 7DW),TRANSPORTER T4 Kasten (70XA),TRANSPORTER T4 Pritsche/Fahrgestell (70XD)

59806 — **Spurstangenkopf, Tie Rod End, Rotule de barre de connexion**

SEAT CORDOBA (6L2),IBIZA IV (6L1),SKODA FABIA Combi (6Y5),FABIA Stufenheck (6Y3),FABIA (6Y2),VW POLO (9N_)

59807 — **Spurstangenkopf, Tie Rod End, Rotule de barre de connexion**

SEAT CORDOBA (6L2),IBIZA IV (6L1),SKODA FABIA Combi (6Y5),FABIA Stufenheck (6Y3),FABIA (6Y2),VW POLO (9N_)

59808 — **Spurstange, Rod Assembly, Barre de connexion**

SEAT CORDOBA (6L2),SKODA FABIA Combi (6Y5),FABIA Stufenheck (6Y3),FABIA (6Y2),VW POLO (9N_)

59808/1 — **Axialgelenk, Spurstange, Inner Tie Rod, Rotule de direction intérieure, barre de connexion**

SEAT CORDOBA (6L2),IBIZA IV (6L1),SKODA FABIA Combi (6Y5),FABIA Praktik,FABIA Stufenheck (6Y3),FABIA (6Y2),ROOMSTER (5J),VW FOX (5Z1),POLO Stufenheck,POLO (9N_)

59809 — **Spurstange, Rod Assembly, Barre de connexion**

SEAT CORDOBA (6L2),SKODA FABIA Combi (6Y5),FABIA Stufenheck (6Y3),FABIA (6Y2),VW POLO (9N_)

59810 — **Trag-/Führungsgelenk, Ball Joint, Rotule de suspension**

SEAT CORDOBA (6L2),IBIZA IV (6L1),SKODA FABIA,FABIA Combi,FABIA Combi (6Y5),FABIA Praktik,FABIA Stufenheck (6Y3),FABIA (6Y2),ROOMSTER (5J),VW FOX (5Z1),POLO (9N_)

59811 — **Trag-/Führungsgelenk, Ball Joint, Rotule de suspension**

SEAT CORDOBA (6L2),IBIZA IV (6L1),SKODA FABIA,FABIA Combi,FABIA Combi (6Y5),FABIA Praktik,FABIA Stufenheck (6Y3),FABIA (6Y2),ROOMSTER (5J),VW FOX (5Z1),POLO (9N_)

59812HPS — **Stange/Strebe, Stabilisator, Link Stabiliser, Entretoise/tige, stabilisateur**

AUDI A2 (8Z0),SEAT CORDOBA (6L2),IBIZA IV (6L1),IBIZA V SPORTCOUPE (6J1),IBIZA V (6J5),SKODA FABIA Combi (6Y5),FABIA Praktik,FABIA Stufenheck (6Y3),FABIA (6Y2),PRAKTIK,ROOMSTER (5J),SVW POLO JINQIN Schrägheck,POLO JINQU Stufenheck,POLO Schrägheck,POLO Stufenheck,SVW SKODA FABIA,VW FOX (5Z1),POLO Stufenheck,POLO (6R_),POLO (9N_)

59813 — **Lenker, Radaufhängung, Track Control Arm, Bras de liaison, suspension de roue**

SEAT CORDOBA (6L2),IBIZA IV (6L1),SKODA FABIA Combi (6Y5),FABIA Praktik,FABIA Stufenheck (6Y3),FABIA (6Y2),ROOMSTER (5J),VW FOX (5Z1),POLO Stufenheck,POLO (9N_)

59813/1 — **Lenker, Radaufhängung, Track Control Arm, Bras de liaison, suspension de roue**

SEAT CORDOBA (6L2),IBIZA IV (6L1),SKODA FABIA Combi (6Y5),FABIA Praktik,FABIA Stufenheck (6Y3),FABIA (6Y2),ROOMSTER (5J),VW FOX (5Z1),POLO Stufenheck,POLO (9N_)

59813/2 — **Lenker, Radaufhängung, Track Control Arm, Bras de liaison, suspension de roue**

SEAT CORDOBA (6L2),IBIZA IV (6L1),SKODA FABIA Combi (6Y5),FABIA Praktik,FABIA Stufenheck (6Y3),FABIA (6Y2),ROOMSTER (5J),VW FOX (5Z1),POLO Stufenheck,POLO (9N_)

59814 — **Spurstangenkopf, Tie Rod End, Rotule de barre de connexion**

VW TRANSPORTER T4 Bus (70XB, 70XC, 7DB, 7DW),TRANSPORTER T4 Kasten (70XA),TRANSPORTER T4 Pritsche/Fahrgestell (70XD)

59815 — **Spurstangenkopf, Tie Rod End, Rotule de barre de connexion**

VW TRANSPORTER T4 Bus (70XB, 70XC, 7DB, 7DW),TRANSPORTER T4 Kasten (70XA),TRANSPORTER T4 Pritsche/Fahrgestell (70XD)

59816 — **Spurstangenkopf, Tie Rod End, Rotule de barre de connexion**

VW PASSAT Variant (3A5, 35I),PASSAT (3A2, 35I)

59817 — **Spurstangenkopf, Tie Rod End, Rotule de barre de connexion**

VW PASSAT Variant (3A5, 35I),PASSAT (3A2, 35I)

59818HPS — **Reparatursatz, Querlenker, Suspension Kit, Kit de réparation, bras triangulaire**

AUDI A4 Avant (8D5, B5),A4 (8D2, B5),A4 (8E2, B6),A6 (4B, C5),SKODA SUPERB (3U4),VW PASSAT Variant (3B5),PASSAT (3B2)

59818/1HPS — **Reparatursatz, Querlenker, Suspension Kit, Kit de réparation, bras triangulaire**

AUDI A4 Avant (8D5, B5),A4 (8D2, B5),A6 Avant (4B, C5),A6 (4B, C5),FAW-AUDI A6 Stufenheck (C5),A6 Stufenheck (4A2, 4B2),SKODA SUPERB (3U4),SVW PASSAT Stufenheck,VW PASSAT Variant (3B5),PASSAT Variant (3B6),PASSAT (3B2),PASSAT (3B3)

59818/2 — **Reparatursatz, Querlenker, Suspension Kit, Kit de réparation, bras triangulaire**

AUDI A4 Avant (8D5, B5),A4 (8D2, B5),A6 Avant (4B, C5),A6 (4B, C5),SKODA SUPERB (3U4),VW PASSAT Variant (3B5),PASSAT Variant (3B6),PASSAT (3B2),PASSAT (3B3)

59819 — **Reparatursatz, Querlenker, Suspension Kit, Kit de réparation, bras triangulaire**

AUDI A4 Avant (8D5, B5),A4 (8D2, B5),A6 (4B, C5),SKODA SUPERB (3U4),VW PASSAT Variant (3B5),PASSAT (3B2)

59819/1 — **Reparatursatz, Querlenker, Suspension Kit, Kit de réparation, bras triangulaire**

AUDI A4 Avant (8D5, B5),A4 (8D2, B5),A4 (8E2, B6),SKODA SUPERB (3U4),VW PASSAT Variant (3B5),PASSAT (3B2)

59819/2 — **Reparatursatz, Querlenker, Suspension Kit, Kit de réparation, bras triangulaire**

AUDI A4 Avant (8D5, B5),A4 (8D2, B5),SKODA SUPERB (3U4),VW PASSAT Variant (3B5),PASSAT (3B2)

59820 — **Stange/Strebe, Stabilisator, Link Stabiliser, Entretoise/tige, stabilisateur**

AUDI ALLROAD (4BH),A6 Avant (4B, C5),A6 (4B, C5),VW PASSAT Variant (3B5),PASSAT (3B2)

59821 — **Reparatursatz, Querlenker, Suspension Kit, Kit de réparation, bras triangulaire**

AUDI A8 (4D2, 4D8)

59821/1 — **Reparatursatz, Querlenker, Suspension Kit, Kit de réparation, bras triangulaire**

AUDI A8 (4D2, 4D8)

59822	**Reparatursatz, Querlenker, Suspension Kit, Kit de réparation, bras triangulaire**
	AUDI A8 (4D2, 4D8)
59822/1	**Reparatursatz, Querlenker, Suspension Kit, Kit de réparation, bras triangulaire**
	AUDI A8 (4D2, 4D8)
59823	**Reparatursatz, Querlenker, Suspension Kit, Kit de réparation, bras triangulaire**
	AUDI A4 Avant (8D5, B5),A4 (8D2, B5),SKODA SUPERB (3U4),VW PASSAT Variant (3B5),PASSAT (3B2)
59824/1HPS	**Reparatursatz, Querlenker, Suspension Kit, Kit de réparation, bras triangulaire**
	AUDI A4 Avant (8D5, B5),A4 Cabriolet (8H7, 8HE),A4 (8D2, B5),A4 (8E2, B6),A6 Avant (4B, C5),A6 (4B, C5),VW PASSAT Variant (3B6),PASSAT (3B3)
59824/2	**Reparatursatz, Querlenker, Suspension Kit, Kit de réparation, bras triangulaire**
	AUDI A4 Avant (8D5, B5),A4 Cabriolet (8H7, 8HE),A4 (8D2, B5),A4 (8E2, B6),A6 Avant (4B, C5),A6 (4B, C5),VW PASSAT Variant (3B6),PASSAT (3B3)
59825/1	**Reparatursatz, Querlenker, Suspension Kit, Kit de réparation, bras triangulaire**
	AUDI A4 Avant (8ED),A4 Avant (8E5, B6),A4 Cabriolet (8H7, 8HE),A4 (8EC),A4 (8E2, B6)
59826	**Reparatursatz, Querlenker, Suspension Kit, Kit de réparation, bras triangulaire**
	AUDI A6 Avant (4B, C5),A6 (4B, C5),SKODA SUPERB (3U4),VW PASSAT Variant (3B5),PASSAT Variant (3B6),PASSAT (3B2),PASSAT (3B3)
59826/1	**Reparatursatz, Querlenker, Suspension Kit, Kit de réparation, bras triangulaire**
	AUDI A6 Avant (4B, C5),A6 (4B, C5),SKODA SUPERB (3U4),VW PASSAT Variant (3B5),PASSAT Variant (3B6),PASSAT (3B2),PASSAT (3B3)
59827	**Reparatursatz, Querlenker, Suspension Kit, Kit de réparation, bras triangulaire**
	AUDI A4 Avant (8ED),A4 Avant (8E5, B6),A4 Cabriolet (8H7, 8HE),A4 (8EC),A4 (8E2, B6)
59827/1	**Reparatursatz, Querlenker, Suspension Kit, Kit de réparation, bras triangulaire**
	AUDI A4 Avant (8ED),A4 Avant (8E5, B6),A4 Cabriolet (8H7, 8HE),A4 (8EC),A4 (8E2, B6)
59828	**Reparatursatz, Querlenker, Suspension Kit, Kit de réparation, bras triangulaire**
	AUDI A6 Allroad (4FH),A6 Avant (4F5),A6 (4F2)
59828/1	**Reparatursatz, Querlenker, Suspension Kit, Kit de réparation, bras triangulaire**
	AUDI A6 Allroad (4FH),A6 Avant (4F5),A6 (4F2)
59830	**Reparatursatz, Radaufhängung, Repair Kit, wheel suspension, Kit de réparation, suspension de roue**
	MERCEDES-BENZ CABRIOLET (A124),C-KLASSE Kombi (S202),C-KLASSE (W202),CLK Cabriolet (A208),CLK (C208),COUPE (C124),E-KLASSE Cabriolet (A124),E-KLASSE Coupe (C124),E-KLASSE Kombi (S124),E-KLASSE Kombi (S210),E-KLASSE (W124),E-KLASSE (W210),KOMBI Kombi (S124),SL (R129),SLK (R170),Stufenheck (W124),190 (W201)
59830/1	**Reparatursatz, Radaufhängung, Repair Kit, wheel suspension, Kit de réparation, suspension de roue**
	MERCEDES-BENZ CABRIOLET (A124),C-KLASSE Kombi (S202),C-KLASSE (W202),CLK Cabriolet (A208),CLK (C208),COUPE (C124),E-KLASSE Cabriolet (A124),E-KLASSE Coupe (C124),E-KLASSE Kombi (S124),E-KLASSE Kombi (S210),E-KLASSE (W124),E-KLASSE (W210),KOMBI Kombi (S124),SL (R129),SLK (R170),Stufenheck (W124),190 (W201)
59831	**Lenkzwischenhebel, Control Arm, Levier intermédiaire de direction**
	MERCEDES-BENZ COUPE (C123),E-KLASSE Cabriolet (A124),E-KLASSE Coupe (C124),E-KLASSE Kombi (S124),E-KLASSE (W124),KOMBI Kombi (S123),S-KLASSE Coupe (C126),S-KLASSE Stufenheck (W108, W109),S-KLASSE (W116),S-KLASSE (W126),SL Coupe (C107),SL (R107),Stufenheck (W123),/8 (W115)
59832	**Trag-/Führungsgelenk, Ball Joint, Rotule de suspension**
	MERCEDES-BENZ M-KLASSE (W163)
59833	**Stange/Strebe, Stabilisator, Link Stabiliser, Entretoise/tige, stabilisateur**
	MERCEDES-BENZ CLS (C219),E-KLASSE Kombi (S211),E-KLASSE (W211)
59834	**Stange/Strebe, Stabilisator, Link Stabiliser, Entretoise/tige, stabilisateur**
	MERCEDES-BENZ CLS (C219),E-KLASSE Kombi (S211),E-KLASSE (W211)
59836	**Lenker, Radaufhängung, Track Control Arm, Bras de liaison, suspension de roue**
	MERCEDES-BENZ S-KLASSE Coupe (C140),S-KLASSE (W140)
59837	**Lenker, Radaufhängung, Track Control Arm, Bras de liaison, suspension de roue**
	MERCEDES-BENZ S-KLASSE Coupe (C140),S-KLASSE (W140)
59838	**Trag-/Führungsgelenk, Ball Joint, Rotule de suspension**
	MERCEDES-BENZ M-KLASSE (W163)
59840	**Spurstangenkopf, Tie Rod End, Rotule de barre de connexion**
	MERCEDES-BENZ C-KLASSE Kombi (S203),C-KLASSE Sportcoupe (CL203),C-KLASSE (W203),CLK (C209)
59841	**Spurstangenkopf, Tie Rod End, Rotule de barre de connexion**
	MERCEDES-BENZ C-KLASSE Kombi (S203),C-KLASSE Sportcoupe (CL203),C-KLASSE (W203),CLK (C209)
59843	**Spurstangenkopf, Tie Rod End, Rotule de barre de connexion**
	MERCEDES-BENZ S-KLASSE Coupe (C215),S-KLASSE (W220),SL (R230)
59844	**Axialgelenk, Spurstange, Inner Tie Rod, Rotule de direction intérieure, barre de connexion**
	MERCEDES-BENZ C-KLASSE Kombi (S203),C-KLASSE Sportcoupe (CL203),C-KLASSE (W203),CLK (C209),E-KLASSE Kombi (S211),E-KLASSE (W211),S-KLASSE Coupe (C215),S-KLASSE (W220),SL (R230)
59845	**Stange/Strebe, Stabilisator, Link Stabiliser, Entretoise/tige, stabilisateur**
	MERCEDES-BENZ S-KLASSE Coupe (C140),S-KLASSE Coupe (C215),S-KLASSE (W140),S-KLASSE (W220),SL (R230)
59846	**Reparatursatz, Querlenker, Suspension Kit, Kit de réparation, bras triangulaire**
	MERCEDES-BENZ A-KLASSE (W168)

59847HPS

Stange/Strebe, Stabilisator, Link Stabiliser, Entretoise/tige, stabilisateur

MERCEDES-BENZ CABRIOLET (A124),C-KLASSE Kombi (S202),C-KLASSE (W202),CLK Cabriolet (A208),CLK (C208),COUPE (C124),E-KLASSE Cabriolet (A124),E-KLASSE Coupe (C124),E-KLASSE Kombi (S124),E-KLASSE Kombi (S210),E-KLASSE (W124),E-KLASSE (W210),KOMBI Kombi (S124),SL (R129),Stufenheck (W124),190 (W201)

59849

Stange/Strebe, Stabilisator, Link Stabiliser, Entretoise/tige, stabilisateur

ISUZU TROOPER,TROOPER Soft Top,TROOPER Soft Top (UB),TROOPER (UB),OPEL FRONTERA A Sport (5_SUD2),FRONTERA A (5_MWL4),FRONTERA B (6B_),MONTEREY A (UBS_),MONTEREY B

59850

Stange/Strebe, Stabilisator, Link Stabiliser, Entretoise/tige, stabilisateur

SUZUKI BALENO (EG),BALENO Kombi (EG),BALENO Schrägheck (EG)

59851

Stange/Strebe, Stabilisator, Link Stabiliser, Entretoise/tige, stabilisateur

NISSAN SUNNY III Hatchback (N14),SUNNY III Liftback (N14),SUNNY III (N14)

59852HPS

Stange/Strebe, Stabilisator, Link Stabiliser, Entretoise/tige, stabilisateur

VW GOLF IV Variant (1J5),GOLF IV (1J1)

59853HPS

Stange/Strebe, Stabilisator, Link Stabiliser, Entretoise/tige, stabilisateur

VW GOLF IV Variant (1J5),GOLF IV (1J1)

59854

Stange/Strebe, Stabilisator, Link Stabiliser, Entretoise/tige, stabilisateur

MERCEDES-BENZ SPRINTER 2-t Bus (901, 902),SPRINTER 2-t Kasten (901, 902),SPRINTER 2-t Pritsche/Fahrgestell (901, 902),SPRINTER 3-t Bus (903),SPRINTER 3-t Kasten (903),SPRINTER 3-t Pritsche/Fahrgestell (903),SPRINTER 4-t Bus (904),SPRINTER 4-t Kasten (904),SPRINTER 4-t Pritsche/Fahrgestell (904),VW LT 28-35 II Bus (2DM),LT 28-46 II Kasten (2DX0AE),LT 28-46 II Pritsche/Fahrgestell (2DX0FE)

59855

Stange/Strebe, Stabilisator, Link Stabiliser, Entretoise/tige, stabilisateur

MERCEDES-BENZ SPRINTER 2-t Bus (901, 902),SPRINTER 2-t Kasten (901, 902),SPRINTER 2-t Pritsche/Fahrgestell (901, 902),SPRINTER 3-t Bus (903),SPRINTER 3-t Kasten (903),SPRINTER 3-t Pritsche/Fahrgestell (903),SPRINTER 4-t Bus (904),SPRINTER 4-t Kasten (904),SPRINTER 4-t Pritsche/Fahrgestell (904),VW LT 28-35 II Bus (2DM),LT 28-46 II Kasten (2DX0AE),LT 28-46 II Pritsche/Fahrgestell (2DX0FE)

59856

Stange/Strebe, Stabilisator, Link Stabiliser, Entretoise/tige, stabilisateur

MERCEDES-BENZ S-KLASSE Coupe (C140),S-KLASSE (W140)

59857

Stange/Strebe, Stabilisator, Link Stabiliser, Entretoise/tige, stabilisateur

MERCEDES-BENZ C-KLASSE Kombi (S203),C-KLASSE Sportcoupe (CL203),C-KLASSE (W203),CLK Cabriolet (A209),CLK (C209)

59857HPS

Stange/Strebe, Stabilisator, Link Stabiliser, Entretoise/tige, stabilisateur

MERCEDES-BENZ C-KLASSE Kombi (S203),C-KLASSE Sportcoupe (CL203),C-KLASSE (W203),CLK Cabriolet (A209),CLK (C209)

59858HPS

Stange/Strebe, Stabilisator, Link Stabiliser, Entretoise/tige, stabilisateur

MERCEDES-BENZ CLS (C219),E-KLASSE Kombi (S211),E-KLASSE (W211),SL (R230)

59859

Stange/Strebe, Stabilisator, Link Stabiliser, Entretoise/tige, stabilisateur

MERCEDES-BENZ C-KLASSE Kombi (S203),C-KLASSE Sportcoupe (CL203),C-KLASSE (W203),CLK Cabriolet (A209),CLK (C209)

59860

Stange/Strebe, Stabilisator, Link Stabiliser, Entretoise/tige, stabilisateur

MERCEDES-BENZ C-KLASSE Kombi (S203),C-KLASSE Sportcoupe (CL203),C-KLASSE (W203),CLK Cabriolet (A209),CLK (C209)

59861

Stange/Strebe, Stabilisator, Link Stabiliser, Entretoise/tige, stabilisateur

MERCEDES-BENZ C-KLASSE Kombi (S203),C-KLASSE (W203)

59861HPS

Stange/Strebe, Stabilisator, Link Stabiliser, Entretoise/tige, stabilisateur

MERCEDES-BENZ C-KLASSE Kombi (S203),C-KLASSE (W203)

59862

Lenkgestänge, Steering Linkage, Tringlerie de direction

MERCEDES-BENZ C-KLASSE Kombi (S202),C-KLASSE (W202),CLK Cabriolet (A208),CLK (C208)

59864

Trag-/Führungsgelenk, Ball Joint, Rotule de suspension

MERCEDES-BENZ CABRIOLET (A124),C-KLASSE Kombi (S202),C-KLASSE Kombi (S203),C-KLASSE Sportcoupe (CL203),C-KLASSE (W202),C-KLASSE (W203),CLK Cabriolet (A208),CLK Cabriolet (A209),CLK (C208),CLK (C209),CLS (C219),COUPE (C124),E-KLASSE Cabriolet (A124),E-KLASSE Coupe (C124),E-KLASSE Kombi (S124),E-KLASSE Kombi (S210),E-KLASSE Kombi (S211),E-KLASSE (W124),E-KLASSE (W210),E-KLASSE (W211),KOMBI Kombi (S124),S-KLASSE Coupe (C140),S-KLASSE Coupe (C215),S-KLASSE (W140),S-KLASSE (W220),SL (R129),SLK (R170),Stufenheck (W124),170 (W170),190 (W201)

59865

Spurstange, Rod Assembly, Barre de connexion

MERCEDES-BENZ SL (R129)

59866

Spurstangenkopf, Tie Rod End, Rotule de barre de connexion

MERCEDES-BENZ E-KLASSE (W124),SL (R129),SPRINTER 4-t Pritsche/Fahrgestell (904),Stufenheck (W124)

59867

Spurstangenkopf, Tie Rod End, Rotule de barre de connexion

MERCEDES-BENZ E-KLASSE (W124),SL (R129),Stufenheck (W124)

59869

Stange/Strebe, Radaufhängung, Link, wheel suspension, Biellette de barre stabilisatrice

MERCEDES-BENZ C-KLASSE Kombi (S202),C-KLASSE (W202)

59872

Spurstangenkopf, Tie Rod End, Rotule de barre de connexion

MERCEDES-BENZ M-KLASSE (W163)

59873

Spurstangenkopf, Tie Rod End, Rotule de barre de connexion

MERCEDES-BENZ M-KLASSE (W163)

59874

Spurstange, Rod Assembly, Barre de connexion

MERCEDES-BENZ S-KLASSE Coupe (C215),S-KLASSE (W220)

59876

Lenkstange, Centre Rod Assembly, Barre de direction

MERCEDES-BENZ S-KLASSE (W220)

59877	**Lenkstange, Centre Rod Assembly, Barre de direction**
	MERCEDES-BENZ S-KLASSE (W220)
59878	**Lenkstange, Centre Rod Assembly, Barre de direction**
	MERCEDES-BENZ S-KLASSE Coupe (C140),S-KLASSE Coupe (C215),S-KLASSE (W140),S-KLASSE (W220)
59879	**Lenker, Radaufhängung, Track Control Arm, Bras de liaison, suspension de roue**
	MERCEDES-BENZ S-KLASSE (W220)
59880	**Lenker, Radaufhängung, Track Control Arm, Bras de liaison, suspension de roue**
	MERCEDES-BENZ S-KLASSE (W220)
59881	**Lenker, Radaufhängung, Track Control Arm, Bras de liaison, suspension de roue**
	MERCEDES-BENZ C-KLASSE Kombi (S203),C-KLASSE Sportcoupe (CL203),C-KLASSE (W203),CLK Cabriolet (A209),CLK (C209),SLK (R171)
59882	**Lenker, Radaufhängung, Track Control Arm, Bras de liaison, suspension de roue**
	MERCEDES-BENZ C-KLASSE Kombi (S203),C-KLASSE Sportcoupe (CL203),C-KLASSE (W203),CLK Cabriolet (A209),CLK (C209),SLK (R171)
59884	**Lenker, Radaufhängung, Track Control Arm, Bras de liaison, suspension de roue**
	MERCEDES-BENZ C-KLASSE Kombi (S203),C-KLASSE Sportcoupe (CL203),C-KLASSE (W203)
59885	**Lenker, Radaufhängung, Track Control Arm, Bras de liaison, suspension de roue**
	MERCEDES-BENZ C-KLASSE Kombi (S203),C-KLASSE Sportcoupe (CL203),C-KLASSE (W203)
59889	**Spurstange, Rod Assembly, Barre de connexion**
	VW LUPO (6X1, 6E1)
59890	**Spurstange, Rod Assembly, Barre de connexion**
	VW LUPO (6X1, 6E1)
59890/1	**Axialgelenk, Spurstange, Inner Tie Rod, Rotule de direction intérieure, barre de connexion**
	VW LUPO (6X1, 6E1)
59891	**Spurstange, Rod Assembly, Barre de connexion**
	AUDI A2 (8Z0)
59892	**Spurstange, Rod Assembly, Barre de connexion**
	AUDI A2 (8Z0)
59893	**Lenker, Radaufhängung, Track Control Arm, Bras de liaison, suspension de roue**
	AUDI A4 Avant (8D5, B5),A4 (8D2, B5),A4 (8E2, B6)
59894	**Stange/Strebe, Stabilisator, Link Stabiliser, Entretoise/tige, stabilisateur**
	AUDI A2 (8Z0)
59895	**Spurstangenkopf, Tie Rod End, Rotule de barre de connexion**
	AUDI A3 (8L1),SKODA OCTAVIA (1U2),VW GOLF III Variant (1H5),GOLF III (1H1),GOLF IV (1J1),NEW BEETLE (9C1, 1C1)
59896	**Spurstangenkopf, Tie Rod End, Rotule de barre de connexion**
	AUDI A3 (8L1),SKODA OCTAVIA (1U2),VW GOLF III Variant (1H5),GOLF III (1H1),GOLF IV (1J1),NEW BEETLE (9C1, 1C1)
59897	**Spurstangenkopf, Tie Rod End, Rotule de barre de connexion**
	MERCEDES-BENZ S-KLASSE Coupe (C126),S-KLASSE (W116),S-KLASSE (W126)
59898	**Trag-/Führungsgelenk, Ball Joint, Rotule de suspension**
	MERCEDES-BENZ HENSCHEL 2-t,T1 Bus (601),100 Bus (631),100 Kasten (631),100 Pritsche/Fahrgestell (631)
59899	**Axialgelenk, Spurstange, Inner Tie Rod, Rotule de direction intérieure, barre de connexion**
	MERCEDES-BENZ M-KLASSE (W163)
59900	**Lenker, Radaufhängung, Track Control Arm, Bras de liaison, suspension de roue**
	SMART CABRIO,CITY-COUPE (MC01)
59901HPS	**Stange/Strebe, Stabilisator, Link Stabiliser, Entretoise/tige, stabilisateur**
	SMART CABRIO,CITY-COUPE (MC01),FORTWO Cabrio,FORTWO Coupe
59902	**Trag-/Führungsgelenk, Ball Joint, Rotule de suspension**
	SMART CABRIO,CITY-COUPE (MC01),CROSSBLADE,FORTWO Cabrio,FORTWO Coupe,ROADSTER,ROADSTER Coupe
59903	**Spurstangenkopf, Tie Rod End, Rotule de barre de connexion**
	SMART CABRIO,CITY-COUPE (MC01),CROSSBLADE,FORTWO Cabrio,FORTWO Coupe,ROADSTER,ROADSTER Coupe
59904	**Stange/Strebe, Stabilisator, Link Stabiliser, Entretoise/tige, stabilisateur**
	SMART FORTWO Cabrio,FORTWO Coupe
59930	**Lenker, Radaufhängung, Track Control Arm, Bras de liaison, suspension de roue**
	CHRYSLER PT CRUISER Cabriolet,PT CRUISER (PT_)
59931	**Lenker, Radaufhängung, Track Control Arm, Bras de liaison, suspension de roue**
	CHRYSLER PT CRUISER Cabriolet,PT CRUISER (PT_)
59932	**Stange/Strebe, Stabilisator, Link Stabiliser, Entretoise/tige, stabilisateur**
	CHRYSLER CIRRUS,SEBRING Cabriolet (JR),SEBRING (JR),STRATUS Cabriolet (JX),STRATUS (JA)
59933	**Stange/Strebe, Stabilisator, Link Stabiliser, Entretoise/tige, stabilisateur**
	JEEP CHEROKEE (XJ)

59934	**Stange/Strebe, Stabilisator, Link Stabiliser, Entretoise/tige, stabilisateur**
	JEEP GRAND CHEROKEE I (Z)
59935	**Stange/Strebe, Stabilisator, Link Stabiliser, Entretoise/tige, stabilisateur**
	CHRYSLER 300 C,300 C Touring
59936	**Stange/Strebe, Stabilisator, Link Stabiliser, Entretoise/tige, stabilisateur**
	CHRYSLER 300 C,300 C Touring
59937	**Stange/Strebe, Stabilisator, Link Stabiliser, Entretoise/tige, stabilisateur**
	CHRYSLER 300 C,300 C Touring
59938	**Stange/Strebe, Stabilisator, Link Stabiliser, Entretoise/tige, stabilisateur**
	CHRYSLER 300 C,300 C Touring
59939	**Lenker, Radaufhängung, Track Control Arm, Bras de liaison, suspension de roue**
	CHRYSLER 300 C,300 C Touring
59940	**Lenker, Radaufhängung, Track Control Arm, Bras de liaison, suspension de roue**
	CHRYSLER 300 C,300 C Touring
59941	**Lenker, Radaufhängung, Track Control Arm, Bras de liaison, suspension de roue**
	CHRYSLER 300 C,300 C Touring
59942	**Lenker, Radaufhängung, Track Control Arm, Bras de liaison, suspension de roue**
	CHRYSLER 300 C,300 C Touring
59943	**Lenker, Radaufhängung, Track Control Arm, Bras de liaison, suspension de roue**
	CHRYSLER 300 C,300 C Touring
59944	**Spurstangenkopf, Tie Rod End, Rotule de barre de connexion**
	CHRYSLER 300 C,300 C Touring

ALFA ROMEO	MAPCO	ALFA ROMEO	MAPCO	ALFA ROMEO	MAPCO
164.0021.039.00	19020	46 462 627	19010	46 474 556	19009
46 474 557	19009	46 802 680	49068	46 802 682	49067
46 843 389	49030HPS	50 704 306	59022	50 704 307	59023
50 704 361	59017	50 704 362	59016	50 704 680	59020
50 704 681	59021	50 704 947	59018	50 704 948	59019
50 705 311	59020	50 705 312	59021	50 705 702	59020
50 705 703	59021	50 706 004	59020	50 706 005	59021
50 706 474	59021	50 706 475	59021	50 706 595	59021
50 706 598	59021	50 706 858	59022	50 706 859	59023
50 706 954	33048	50 706 955	33049	50 706 990	59017
50 706 991	59016	50 707 029	59022	50 707 030	59023
50 707 316	59022	50 707 317	59023	50 707 480	59019
50 707 481	59018	50 708 721	33048	50 708 722	33049
51 749 713	49068	51 783 056	19098	51 783 057	19097
51 787 337	59018	51 795 446	59023	51 795 447	59022
51 795 454	59017	51 795 455	59016	51 795 703	59020
51 795 704	59021	51 795 705	59020	51 795 706	59021
51 801 137	59022	51 801 138	59023	51 817 623	59018
51 817 624	59019	51 834 093	49027	51 834 094	49026
6 066 804	19031	60 507 918	19007	60 510 360	19008
60 510 362	19021	60 510 363	19020	60 511 622	19007
60 521 243	49050	60 564 478	19009	60 564 479	19010
60 566 661	19060	60 586 771	19009	60 586 772	19010
60 588 843	19020	60 588 844	19021	60 588 845	19020
60 593 622	19010	60 593 623	19009	60 608 979	19013
60 608 980	19014	60 612 435	49047	60 612 436	49048
60 613 575	49031	60 614 514	49046	60 625 029	49030HPS
60 627 290	19031	60 627 291	19032	60 628 255	49033
60 628 284	49034	60 629 903	49067	60 651 939	49027
60 651 940	49026	60 652 167	49068	60 652 465	49028
60 652 466	49029	60 653 551	49080	60 653 552	49081
60 657 245	49027	60 657 246	49026	60 665 805	19032
60 666 020	49081	60 666 021	49080	60 678 134	49028
60 678 135	49029	60 686 891	49028	60 686 892	49029
60 695 895	19031	60 695 896	19032	60 801 425	19060
60 801 528	19020	60 801 529	19021	60 809 242	33009
60 809 494	19053	60 809 813	19009	60 809 814	19010
60 812 796	19009	60 812 797	19010	60 813 013	19009
60 813 014	19010	60 813 043	19009	60 813 044	19010
6063 0757	49032HPS	7 601 064	33019	7 601 065	33019
7 601 068	33035	77 363 706	59014	77 363 707	59015
77 363 829	59012	77 363 830	59013	82 398 170	19060
82 446 499	19060	9 939 557	19017	9 944 452	19016
9 947 361	19017	9 947 371	49053	9 947 437	19052
9 947 438	19053	9 947 718	49053	9 947 720	49098
9 947 919	19029	9 947 920	19030	9 947 923	19018
9 983 325	19404	93 501 144	19009	93 501 145	19010
93 802 209	19407	93 802 242	19408		

AUDI	MAPCO	AUDI	MAPCO	AUDI	MAPCO

Die aufgeführten Vergleichsnummern dienen nur zur besseren Identifikation.
References are only specified for a better identification.
Les références mentionées ne servent qu' á une meilleure identification.

AUDI	MAPCO	AUDI	MAPCO	AUDI	MAPCO
1J0 199 429	36852	1J0 407 151A	49704	1J0 407 151B	49704
1J0 407 151C	49704	1J0 407 181	33903	1J0 407 181A	33903
1J0 407 365A	49702/1	1J0 407 365A	49702	1J0 407 365C	49702
1J0 407 365C	49702/1	1J0 407 365D	49702	1J0 407 365D	49702/1
1J0 407 366A	49703/1	1J0 407 366A	49703	1J0 407 366C	49703
1J0 407 366C	49703/1	1J0 411 314	33927	1J0 411 314S	33927
1J0 411 315C	49868	1J0 411 315D	49793	1J0 411 315G	49867
1J0 411 316D	49794	1J0 422 803	49869	1J0 422 803A	49869
1J0 422 803B	49690	1J0 422 804	49870	1J0 422 804A	49870
1J0 422 804B	49691	1J0 422 811	59895	1J0 422 811A	59895
1J0 422 811B	49700	1J0 422 812A	59896	1J0 422 812B	49701
1J0 501 541C	33912/2	1J0 501 541C	33912	1K0 199 231G	36948
1K0 199 231J	36948	1K0 199 232G	36949	1K0 199 232J	36949
1K0 407 151AB	51715	1K0 407 151AC	51726	1K0 407 151M	51726
1K0 407 152AB	51716	1K0 407 152AC	51727	1K0 407 152AD	51727
1K0 407 152M	51727	1K0 407 182	36950	1K0 407 182A	36950
1K0 407 365C	51724	1K0 407 365E	51724	1K0 407 366C	51725
1K0 407 366E	51725	1K0 411 315B	51825HPS	1K0 411 315D	51825HPS
1K0 411 315J	51825HPS	1K0 423 810A	51723	1K0 423 811A	51826
1K0 423 811C	51740	1K0 423 811E	51826	1K0 423 811G	51740
1K0 423 811J	51826	1K0 423 811K	51740	1K0 423 812C	51741
1K0 423 812E	51827	1K0 423 812G	51741	1K0 423 812J	51827
1K0 423 812K	51741	1K0 505 323H	52718	1K0 505 465K	51829HPS
191 407 182	33819	251 411 041C	33814	3C0 407 366A	51725
3C0 423 811B	51826	321 419 811A	19850	357 407 182	33819
4A0 399 413A	33878/9	4A0 407 151	19694	4A0 407 152	19695
4A0 407 181A	33892	4A0 407 183C	33878	4A0 407 183D	33878
4A0 411 327A	36904	4A0 419 801A	49789	4A0 419 802A	49790
4A0 419 811A	19692	4A0 419 812A	19693	4A0 505 389	49686
4A0 511 247	33899	4A0 511 247B	36941	4B0 407 151	51730
4B0 407 515	36915	4B0 419 801B	49732	4B0 419 801E	49732
4B0 419 801M	49732	4B0 419 811	49707HPS	4B0 419 811	49707OES
4B0 419 811A	49707HPS	4B0 419 811A	49707OES	4B0 419 811B	49707OES
4B0 419 811B	49707HPS	4B0 419 811C	49707HPS	4B0 419 811C	49707OES
4B0 419 811E	49707OES	4B0 419 811E	49707HPS	4B0 419 811F	49707HPS
4B0 419 811F	49707OES	4B0 419 811G	59707OES	4B0 419 811Q	59707OES
4B0 501 222D	36776	4B0 501 222E	36776	4B0 501 521D	36775
4B0 501 521E	36775	4B3 407 151C	51730	4B3 407 151F	51730
4B3 407 151K	51730	4D0 407 151A	49710OES	4D0 407 151B	49710OES
4D0 407 151C	49710OES	4D0 407 151E	49710OES	4D0 407 151G	49710OES
4D0 407 151H	49710OES	4D0 407 151J	49710OES	4D0 407 151P	49710OES
4D0 407 181F	33839	4D0 407 181H	33839	4D0 407 182E	33840
4D0 407 183AC	33932	4D0 407 183M	33932	4D0 407 183N	33932
4D0 407 183P	33932	4D0 407 183Q	33932	4D0 407 505B	49713OES
4D0 407 505D	49713OES	4D0 407 505F	49713OES	4D0 407 505H	49713OES
4D0 407 509B	49791OES	4D0 407 509D	49791OES	4D0 407 509F	49791OES
4D0 407 509G	49791OES	4D0 407 509H	49791OES	4D0 407 509J	49791OES
4D0 407 510B	49792OES	4D0 407 510D	49792OES	4D0 407 510F	49792OES
4D0 407 510G	49792OES	4D0 407 510H	49792OES	4D0 407 510J	49792OES

Die aufgeführten Vergleichsnummern dienen nur zur besseren Identifikation.
References are only specified for a better identification.
Les références mentionées ne servent qu' á une meilleure identification.

AUDI	MAPCO	AUDI	MAPCO	AUDI	MAPCO
4D0 407 511F	49791OES	4D0 407 511F	49792OES	4D0 407 515C	33876
4D0 407 693AC	49708OES	4D0 407 693AD	49708OES	4D0 407 693E	49708OES
4D0 407 693H	49708OES	4D0 407 693K	49708OES	4D0 407 693M	49708OES
4D0 407 693N	49708OES	4D0 407 694AC	49709OES	4D0 407 694AD	49709OES
4D0 407 694E	49709OES	4D0 407 694H	49709OES	4D0 407 694K	49709OES
4D0 407 694M	49709OES	4D0 407 694N	49709OES	4D0 411 317G	49682
4D0 411 317J	49682	4D0 411 317K	49685OES	4D0 411 318G	49684/1OES
4D0 411 327E	33939	4D0 411 327F	33940	4D0 411 327G	33939
4D0 411 327H	33940	4D0 419 801B	49732	4D0 419 801C	49732
4D0 419 801D	49732	4D0 419 801L	49732	4D0 419 811A	49707HPS
4D0 419 811A	49707OES	4D0 419 811B	49707HPS	4D0 419 811B	49707OES
4D0 419 811J	59707OES	4D0 422 821A	49738	4D0 501 529F	49716
4D0 505 465D	49714	4D0 505 547C	49729	4D0 505 548C	49715
4D0 511 523A	33941	4D0 511 523B	33941	4D0 511 523C	33941
4E0 407 181B	36771	4E0 407 182B	36774	4E0 407 182C	36774
4E0 407 183A	33932	4E0 407 505B	51876	4E0 407 505E	51876
4E0 407 506B	51877	4E0 407 506E	51877	4E0 407 509B	51878
4E0 407 509E	51878	4E0 407 510B	51879	4E0 407 510E	51879
4E0 407 693N	51738	4E0 407 694N	51739	4E0 411 317C	52711
4E0 411 317E	52711	4E0 419 821C	51736	4F0 407 151	52710
4F0 407 151A	52710	4F0 407 183E	36777	4F0 407 693	51874
4F0 407 693B	51874	4F0 407 693C	51874	4F0 407 693G	51874
4F0 407 694	51875	4F0 407 694B	51875	4F0 407 694C	51875
4F0 407 694G	51875	4F0 419 811B	49707HPS	4F0 419 811C	59707OES
4F0 419 811D	59707OES	4Z7 407 505A	49680OES	4Z7 407 506A	49681OES
431 407 181F	33891	431 407 183A	33901	431 505 172	33808
431 511 247C	33898	443 419 811B	49717	443 419 811D	49717
443 419 812B	49718	443 419 812D	49718	443 505 351P	51870
443 505 352P	51871	443 511 523B	33941	6Q0 411 315C	59812HPS
6Q0 411 315E	59812HPS	6Q0 411 315F	59812HPS	6Q0 411 315G	59812HPS
6Q0 411 315J	59812HPS	6R0 501 541A	33912	7L0 407 021	52716
7L0 407 021A	52716	7L0 407 021B	52716	7L0 422 803D	51745
7L0 422 804D	51746	7L0 422 817D	51742	7L0 422 818D	51743
7L0 422 821D part	51744	7L0 505 465 B	51733	7L0 505 465 C	51733
7L0 505 465 D	51733	7L0 505 466D	51734	7L8 407 151E	52714
7L8 407 152D	52715	7L8 407 152E	52715	701 407 183	33914
8A0 407 365	19684	8A0 407 366	19685	8A0 501 541	33894
8A0 505 465C	49688	8A0 505 466C	49689	8D0 407 505B	49680OES
8D0 407 505C	49680OES	8D0 407 505F	49680OES	8D0 407 505H	49680OES
8D0 407 505K	49680OES	8D0 407 505L	49680OES	8D0 407 506B	49681OES
8D0 407 506C	49681OES	8D0 407 506D	49681OES	8D0 407 506E	49681OES
8D0 407 506F	49681OES	8D0 407 506H	49681OES	8D0 407 506K	49681OES
8D0 407 506L	49681OES	8D0 407 507E	49680OES	8D0 407 508E	49681OES
8D0 407 509A	49791OES	8D0 407 509C	49791OES	8D0 407 509E	49791OES
8D0 407 509F	49791OES	8D0 407 509G	49791OES	8D0 407 510A	49792OES
8D0 407 510C	49792OES	8D0 407 510E	49792OES	8D0 407 510F	49792OES
8D0 407 515A	36773	8D0 407 515B	36773	8D0 407 515C	36773
8D0 411 317D	49683OES	8D0 411 317D	49683/1OES	8D0 411 318D	49684/1OES
8D0 411 318D	49684OES	8D0 411 506K	49683/1OES	8D0 411 506K	49683OES

Die aufgeführten Vergleichsnummern dienen nur zur besseren Identifikation.
References are only specified for a better identification.
Les références mentionées ne servent qu' á une meilleure identification.

AUDI	MAPCO	AUDI	MAPCO	AUDI	MAPCO
8D0 501 530	59893	8D0 501 541D	33902	8E0 407 151M	51710OES
8E0 407 151N	51710OES	8E0 407 505A	49680OES	8E0 407 506A	49681OES
8E0 407 506C	49681OES	8E0 407 509A	49791OES	8E0 407 509C	49791OES
8E0 407 510A	49792OES	8E0 407 510C	49792OES	8E0 407 693AA	51872
8E0 407 693AC	51872	8E0 407 693AG	49708OES	8E0 407 693AJ	51872
8E0 407 693AK	51872	8E0 407 693AL	51872	8E0 407 693E	49708OES
8E0 407 693N	51872	8E0 407 693Q	49708OES	8E0 407 693T	51872
8E0 407 694AA	51873	8E0 407 694AC	51873	8E0 407 694AG	49709OES
8E0 407 694AJ	51873	8E0 407 694AK	51873	8E0 407 694AL	51873
8E0 407 694E	49709OES	8E0 407 694N	51873	8E0 407 694Q	49709OES
8E0 407 694T	51873	8E0 411 317	52712	8E0 411 318	52713
8E0 419 811	59707OES	8E0 419 811B	49707OES	8E0 419 811B	49707HPS
8E0 422 821	49738	8E0 501 521N	36775	8E0 501 522N	36776
8E0 505 465D	59820	8N0 407 181B	36772	8N0 422 803C	51713
8N0 422 804C	51714	8N0 422 811A	51711	8N0 422 812A	51712
8Z0 407 183	36798	8Z0 423 803F	59892	8Z0 423 804F	59891
811 199 415A	33830	811 199 419B	33827	811 199 419C	33827
811 407 147B	49768	811 407 181	33828	811 407 181A	33828
811 411 327A	33844	811 411 327B	33843	811 419 801C	49761
811 419 801E	49761	811 419 802J	49762	811 419 812	19850
811 419 812A	19890	811 419 812B	19890	811 511 247	33829
823 199 415B	33830	823 407 365A	19856	823 407 365C	19856
823 407 365E	19857	823 411 313A	33906	823 419 811	19850
855 407 365	19893	857 407 147A	49769	857 407 181	33842
857 407 474	33907	861 4 07 151B	19854	861 407 183	33893
861 419 812	19850	893 199 415	33830	893 199 419	33827
893 407 147C	49769	893 407 147E	49775	893 407 147G	49768
893 407 148A	49770	893 407 148C	49770	893 407 148E	49776
893 407 181	33846	893 407 365	19680	893 407 365A	19898
893 407 365B	19684	893 407 365F	19680	893 407 366	19681
893 407 366A	19897	893 407 366B	19685	893 407 366F	19681
893 411 327E	33843	893 419 802	49763	895 407 147A	49705
895 407 148A	49706	895 407 365	19684	895 407 366	19685

AUTOBIANCHI	MAPCO	AUTOBIANCHI	MAPCO	AUTOBIANCHI	MAPCO
4364095	19025	4371156	19066	4402649	19044
5958246	19047	5960321	19452	5983404	19042

BMW	MAPCO	BMW	MAPCO	BMW	MAPCO
1 093 707	36668	3110 0363 477	51630	3110 0363 478	51631
3110 3412 137	51630	3110 3412 138	51631	3110 3443 127	51630
3110 3443 128	51631	3110 4026 719	51636	3110 4026 720	51637
3111 1096 982	36660	3111 1096 982	33933/2	3112 0006 482	36668/2
3112 0304 308	36689	3112 1092 010	36669	3112 1092 019	36687/2
3112 1092 609	59615	3112 1092 610	59616	3112 1092 819	59615
3112 1092 820	59616	3112 1093 449	49723	3112 1093 450	49724
3112 1094 233	49723	3112 1094 234	49724	3112 1094 235	36687/2
3112 1094 465	49676/1	3112 1094 466	49677/1	3112 1095 277	36660
3112 1095 278	36660	3112 1096 169	59606	3112 1096 170	59607
3112 1096 425	59602	3112 1096 685	19666/1	3112 1096 685	19666/2

Die aufgeführten Vergleichsnummern dienen nur zur besseren Identifikation.
References are only specified for a better identification.
Les références mentionées ne servent qu' á une meilleure identification.

BMW	MAPCO	BMW	MAPCO	BMW	MAPCO
3112 1096 685	19666HPS	3112 1096 983	36660	3112 1096 984	36660
3112 1096 985	49676/1	3112 1096 986	49677/1	3112 1124 401	19673
3112 1124 402	19674	3112 1124 622	33691	3112 1125 428	33641
3112 1125 428	33641/2	3112 1125 429	33637	3112 1126 110.1	33641
3112 1126 253	19662	3112 1126 254	19661	3112 1126 302	33641
3112 1126 302	33641/2	3112 1126 426	33637	3112 1127 378	33875
3112 1127 725	49733	3112 1127 726	49734	3112 1130 089	49678
3112 1130 090	49679	3112 1130 123	33875/1	3112 1130 140	33875/1
3112 1130 597	49678	3112 1131 582	19674	3112 1131 587	19673
3112 1131 588	19674	3112 1132 159	19698	3112 1132 160	19699
3112 1133 236	36670	3112 1133 237	49661	3112 1133 238	49662
3112 1133 710	33638	3112 1133 711	19698	3112 1133 712	19699
3112 1136 529	19670HPS	3112 1136 530	19671HPS	3112 1136 605	33639
3112 1136 606	33638	3112 1136 607	33666	3112 1139 131	19665
3112 1139 456	33638	3112 1139 826	36670	3112 1139 987	49661
3112 1139 988	49662	3112 1139 991	19673	3112 1139 992	19674
3112 1139 999	49678	3112 1140 000	49679	3112 1140 398	19666HPS
3112 1140 398	19666/1	3112 1140 398	19666/2	3112 1140 399	19670HPS
3112 1140 400	19671HPS	3112 1140 957	19670HPS	3112 1140 958	19671HPS
3112 1141 097	19698	3112 1141 098	19699	3112 1141 717	49727
3112 1141 718	49728	3112 1141 721	49650	3112 1141 722	49651
3112 1141 723	49650	3112 1141 724	49651	3112 1141 752	36668/2
3112 1141 961	59617	3112 1141 962	59618	3112 1142 087	49694
3112 1142 088	49695	3112 1492 143	51664	3112 1492 144	51663
3112 1733 490	49679	3112 1752 717	49676/1	3112 2226 581	19698
3112 2226 582	19699	3112 4000 612	33933/2	3112 4000 612	36660
3112 4004 359	36660	3112 4004 360	36660	3112 4015 707	51663
3112 4015 708	51664	3112 4026 453	59633	3112 4026 454	59634
3112 4036 269	51648	3112 4036 270	51649	3112 6 757 623	33933/2
3112 6 757 623	33933	3112 6 777 850	33933/2	3112 6 777 850	33933
3112 6 783 376	33933	3112 6 783 376	33933/2	3112 6750 057	33933
3112 6750 057	33933/2	3112 6750 057	36660	3112 6750 057S1	36660
3112 6750 221	36660	3112 6750 222	36660	3112 6750 223	49676/1
3112 6750 224	49677/1	3112 6750 519	59633	3112 6750 520	59634
3112 6751 317	49676/1	3112 6751 318	49677/1	3112 6751 372	33933/2
3112 6751 372	36660	3112 6751 435	36660	3112 6751 436	36660
3112 6752 717	49676/1	3112 6752 718	49677/1	3112 6753 058	36660
3112 6753 058	33933/2	3112 6753 059	36660	3112 6753 060	36660
3112 6753 989	51663	3112 6753 990	51664	3112 6753 991	51661
3112 6753 992	51662	3112 6754 547	36660	3112 6754 899	36660
3112 6754 900	36660	3112 6755 835	59629	3112 6755 836	59630
3112 6756 101	59633	3112 6756 102	59634	3112 6756 309	51660
3112 6756 491	59602	3112 6757 622	36660	3112 6757 623	36660
3112 6758 510	19666/2	3112 6758 510	19666HPS	3112 6758 510	19666/1
3112 6758 513	19670HPS	3112 6758 514	19671HPS	3112 6758 519	49676/1
3112 6758 520	49677/1	3112 6758 623	53676	3112 6760 181	51632
3112 6760 182	51633	3112 6760 183	51636	3112 6760 184	51637
3112 6760 275	59608	3112 6760 276	59609	3112 6761 409	51663
3112 6761 410	51664	3112 6763 699	51634	3112 6763 700	51635

Die aufgeführten Vergleichsnummern dienen nur zur besseren Identifikation.
References are only specified for a better identification.
Les références mentionées ne servent qu' á une meilleure identification.

BMW	MAPCO	BMW	MAPCO	BMW	MAPCO
3112 6763 703	51648	3112 6763 704	51649	3112 6763 708	51649
3112 6765 993	59633	3112 6765 994	59634	3112 6765 995	51636
3112 6765 996	51637	3112 6769 717	59606	3112 6769 718	59607
3112 6769 793	51634	3112 6769 794	51635	3112 6769 797	51648
3112 6769 798	51649	3112 6769 801	51648	3112 6769 802	51649
3112 6770 247	49676/1	3112 6770 248	49677/1	3112 6770 849	51634
3112 6770 850	51635	3112 6774 819	49676/1	3112 6774 820	49678
3112 6774 820	49677/1	3112 6774 825	51636	3112 6774 826	51637
3112 6774 831	59633	3112 6774 832	59634	3112 6777 851	49676/1
3112 6777 852	49677/1	3112 9058 814	33847	3112 9058 815	33875
3112 9058 816	33637	3112 9058 818	33641	3112 9058 818	33641/2
3112 9058 819	33637/2	3112 9058 931	33875/1	3112 9059 288	33847
3112 9068 734	36668/2	3112 9068 753	36669/2	3112 9069 829	36668/2
3112 9071 085	36668/2	3112 9071 663	36660	3112 9071 663	33933/2
3112 9071 952	33933/2	3112 9071 952	36660	3112 9071 963	36660
3112 9754 900	36660	3113 6752 717	49676/1	3113 9058 816	33637/2
3114 6752 718	49677/1	3130 3413 201	51639HPS	3130 3413 201	51639
3130 3413 202	51640HPS	3130 3414 299	51639HPS	3130 3414 299	51639
3130 3414 300	51640HPS	3130 6781 547	51644	3130 6781 548	51645
3135 1091 496	49795HPS	3135 1091 764	19667HPS	3135 1091 855	49725
3135 1091 855	49725HPS	3135 1091 856	49726HPS	3135 1091 856	49726
3135 1092 304	59628HPS	3135 1095 661	49725	3135 1095 661	49725HPS
3135 1095 662	49726	3135 1095 662	49726HPS	3135 1095 664	59628HPS
3135 1095 694	19700HPS	3135 1095 695	49795HPS	3135 1124 380	19678HPS
3135 1127 194	19678HPS	3135 1127 689	19667HPS	3135 1128 050	19678HPS
3135 1128 737	19667HPS	3135 1130 075	19678HPS	3135 1133 738	33697
3135 1134 582	19678HPS	3135 1507 989	59695	3135 2227 203	59613HPS
3135 4014 531	51644	3135 4014 532	51645	3135 6750 703	59603
3135 6750 703	59603HPS	3135 6750 704	59604	3135 6750 704	59604HPS
3135 6751 079	51642HPS	3135 6751 080	51643HPS	3135 6753 767	59623HPS
3135 6753 768	59631HPS	3135 6759 537	59614HPS	3135 6760 985	51644
3135 6760 986	51645	3135 6765 933	51657	3135 6765 934	51658
3135 6769 499	51644	3135 6769 500	51645	3135 6778 069	59623HPS
3135 6778 070	59631HPS	3135 6778 831	59614HPS	3210 6765 089	51667
3210 6765 090	51668	3210 6765 235	51665	3210 6765 235	51654
3210 6765 236	51666	3210 6765 236	51654	3210 6767 781	51667
3210 6767 782	51668	3210 6774 220	49653	3210 6774 221	49654
3210 6774 347	51638	3210 6774 361	59626	3211 1091 767	49721
3211 1091 768	49722	3211 1091 769	49746	3211 1091 769	19782
3211 1091 770	19783	3211 1093 769	49721	3211 1093 770	49722
3211 1094 673	49721	3211 1094 674	49722	3211 1095 955	19676
3211 1125 186	49780	3211 1125 187	49781	3211 1126 757	19660
3211 1139 313	19663	3211 1139 314	19664	3211 1139 315	49782
3211 1139 316	49783	3211 1139 317	49782	3211 1139 318	49785
3211 1140 489	19663	3211 1140 490	19664	3211 6754 563	59692
3211 6754 564	59693	3221 1091 723	49735	3221 1091 724	49736
3221 1091 913	49741	3221 1093 433	49741	3221 1095 955	19784
3221 1095 956	19785	3221 1095 957	49653	3221 1095 958	49654
3221 1096 057	49741	3221 1096 059	59624	3221 1096 300	59610

Die aufgeführten Vergleichsnummern dienen nur zur besseren Identifikation.
References are only specified for a better identification.
Les références mentionées ne servent qu' á une meilleure identification.

BMW	MAPCO	BMW	MAPCO	BMW	MAPCO
3221 1096 327	59600	3221 1096 720	59624	3221 1096 897	19784
3221 1096 898	19785	3221 1124 231	19675	3221 1124 232	49730
3221 1124 906	49730	3221 1126 764	49730	3221 1127 136	49730
3221 1127 272	49730	3221 1127 273	49730	3221 1127 917	19669
3221 1127 918	19668	3221 1129 014	49730	3221 1129 017	49731
3221 1129 020	19675	3221 1130 001	19668	3221 1130 004	19669
3221 1130 655	49658	3221 1130 661	49660	3221 1133 525	49658
3221 1133 615	49660	3221 1133 699	49657	3221 1135 666	19675
3221 1135 819	19668	3221 1135 820	19669	3221 1136 450	49657
3221 1136 681	49658	3221 1136 683	19786	3221 1136 685	49660
3221 1138 850	49658	3221 1138 852	19786	3221 1138 854	49660
3221 1141 345	49739	3221 1141 346	49740	3221 6751 277	59601
3221 6751 277	59610	3221 6754 565	59690	3221 6754 566	59691
3221 6756 369	59626	3221 6762 243	51655	3221 6762 244	51656
3221 6762 403	51638	3317 1130 874	33694/2	3317 1130 874	33694
3317 1131 903	33694	3317 1131 903	33694/2	3317 1133 485	33694/2
3330 6772 241	59635	3330 6772 242	59636	3331 1092 515	36665
3331 1092 516	36666	3331 1092 517	36664	3331 1121 041	33695/2
3331 1127 533	33695/2	3331 1127 533	33695	3331 1128 670	33690
3331 1128 760	33690/2	3331 1129 144	33689	3331 1129 760	33690
3331 1129 760	33690/2	3331 1130 487	33695/2	3331 1130 488	33695
3331 1130 488	33695/2	3331 1134 320	33692	3331 1134 320	33692/2
3331 6757 393	36665	3331 6757 394	36666	3331 9059 300	33692
3331 9059 300	33692/2	3331 9059 301	33693/2	3331 9059 301	33693
3332 1090 030	51647	3332 1090 102	36688	3332 1090 504	59622
3332 1090 745	49652	3332 1090 815	59619	3332 1090 816	59620
3332 1090 905	49655	3332 1090 906	49656	3332 1091 620	51647
3332 1092 237	59638	3332 1092 248	36661	3332 1094 209	59619
3332 1094 210	59620	3332 1095 411	59611	3332 1095 412	59612
3332 1095 631	59622	3332 1096 797	59637	3332 1097 009	33934
3332 1097 264	49652	3332 1125 665	49788	3332 1126 476	49788
3332 1135 808	36663	3332 1136 311	36662	3332 1137 806	33934
3332 1138 380	59638	3332 1138 383	36661	3332 1138 722	59621
3332 1140 345	59621	3332 2282 065	59637	3332 6758 141	59635
3332 6758 142	59636	3332 6763 471	51651	3332 6763 473	51650
3332 6765 425	51652	3332 6767 748	59622	3332 6767 759	59635
3332 6767 760	59636	3332 6767 831	59619	3332 6767 832	59620
3332 6768 268	59637	3332 6768 273	59611	3332 6768 274	59612
3332 6768 286	59637	3332 6768 791	49652	3332 6769 971	59635
3332 6769 972	59636	3332 6770 747	59611	3332 6770 748	59612
3332 6770 749	51647	3332 6770 753	59637	3332 6770 775	59635
3332 6770 776	59636	3332 6770 786	33934	3332 6770 813	59638
3332 6770 859	59611	3332 6772 242	59636	3332 6774 793	59635
3332 6774 794	59636	3332 6774 795	59637	3332 6777 424	59637
3332 6777 980	51650	3332 6782 237	51652	3335 6764 428	51659
3350 3413 197	51641HPS	3350 3414 297	51641HPS	3350 6781 539	59639
3350 6781 540	51646	3355 1091 497	49796	3355 1092 292	49663HPS
3355 1094 619	49799	3355 1095 532	49663HPS	3355 1095 696	49796
3355 1096 735	59605HPS	3355 1126 932	49786	3355 1135 307	49787

Die aufgeführten Vergleichsnummern dienen nur zur besseren Identifikation.
References are only specified for a better identification.
Les références mentionées ne servent qu' á une meilleure identification.

BMW	MAPCO	BMW	MAPCO	BMW	MAPCO
3355 1507 999	59694	3355 6753 770	59639	3355 6757 460	59632
3355 6761 000	51646	3355 6764 428	51659		

CHEVROLET	MAPCO	CHEVROLET	MAPCO	CHEVROLET	MAPCO
C96626248	51303	9374-0622	51298	9374-0722	51298
9374-0723	51299	96 626 667	51301	96185969	49756
96185970	49757	96205809	59211	96218397	49756
96218398	49757	96300222	49298HPS	96316765	19518
96391850	51294	96391851	51295	96391876	49298HPS
96403099	51290HPS	96403100	51291HPS	96415063	51294
96415064	51295	9653 5081	51296	96535082	51297
96535087	33575	96535089	51300	96561754	51293HPS
96611265	19518	96626247	51302	96626248	51303
96653381	33574	9681 5893	51296	96815894	51297
9687 0465	51296				

CHRYSLER	MAPCO	CHRYSLER	MAPCO	CHRYSLER	MAPCO
DA782536AB	59936	DA782537AB	59937	DA782561AE	59941
DA782612AC	59940	DA782613AC	59939	DA782665AB	59943
DA782666AB	59942	DA782745AB	59935	DA782836AB	59938
04695626AC	59932	4509774	49937	4509775	49936
4656730AH	59931	4656731AH	59930	4695626	59932
4743021AA	49938HPS	4743454AA	49938HPS	4743454AB	49938HPS
4743454AC	49938HPS	4743669AA	49938HPS	52013468AB	59944
52013468AC	59944	5272236AC	49931	5272237AC	49930

CITROËN	MAPCO	CITROËN	MAPCO	CITROËN	MAPCO
3520 A2	19439	3520 A2	19459	3520 C1	19453
3520 C3	19433	3520 C3	19431	3520 C5	19431
3520 C5	19433	3520 F6	19437	3520 F7	19439
3520 F8	19437	3520 G3	19459	3520 G4	19437
3520 G5	19459	3520 G9	19433	3520 G9	19431
3520 H3	19331/1	3520 H5	19474	3520 H5	19437
3520 H5 + 3640 42	19437	3520 H5 + 3640 51	19474	3520 H6	19474
3520 H6	19459	3520 H6	19437	3520 H8	19439
3520 H9	19485	3520 J3	19485	3520 J4	19485
3520 J4	19486	3520 K3	19390	3520 L0	49084
3520 L1	49086	3520 L4	19385	3520 L9	19385
3520 N3	49084	3520 N4	49086	3520 N6	49320
3520 P3	19383	3520 P4	19431	3520 P4	19433
3520 P6	49082	3520 P8	19433	3520 Q2	49318
3520 Q3	19485	3520 R2	19385	3520 R5	19385
3520 S0	19494	3520 S1	19494	3520 S2	19383
3520 V3	19485	3520 54	19349	3520 76	19441
3520 77	19468	3520 78	19321	3520 79	19322
3520 80	19360	3520 81	19361	3520 92	19360
3520 93	19361	3520 94	19431	3520 94	19433
3520 95	19461	3520 96	19463	3520.93	19360
3521 A6	19438	3521 A7	19440	3521 A8	19438
3521 C3	19460	3521 C5	19460	3521 C9	19434
3521 C9	19432	3521 E3	19332/1	3521 E4	19460

Die aufgeführten Vergleichsnummern dienen nur zur besseren Identifikation.
References are only specified for a better identification.
Les références mentionées ne servent qu' á une meilleure identification.

CITROËN	MAPCO	CITROËN	MAPCO	CITROËN	MAPCO
3521 E5	19438	3521 E5	19475	3521 E5	19475/1
3521 E5 + 3640 42	19438	3521 E5 + 3640 51	19475	3521 E6	19475/1
3521 E6	19475	3521 E6	19438	3521 E9	19486
3521 F3	19486	3521 H0	49082	3521 H1	49083
3521 H2	49085	3521 H3	49087	3521 H5	19440
3521 H6	19386	3521 J1	19386	3521 J3	49085
3521 J4	49087	3521 K3	19384	3521 K4	19432
3521 K4	19434	3521 K6	49083	3521 L0	19434
3521 L2	49321	3521 L3	49319	3521 L4	19486
3521 N3	19386	3521 N8	49311	3521 P1	19495
3521 P2	19495	3521 P3	19384	3521 R4	19486
3521 33	19311	3521 34	19311	3521 37	19350
3521 52	19442	3521 53	19469	3521 64	19434
3521 64	19432	3521 65	19462	3521 66	19464
3521 71	19438	3521 72	19440	3521 81	19454
3521 83	19434	3521 83	19432	3521 85	19432
3521 85	19434	3521 92	19460	3521.F4	19486
3521.G3	19391	3522 50	19440	3522 50	19459
3523 AA	33334	3523 CC	33435	3523 CE	33436
3523 20	33307	3523 31	33306	3523 49	33306
3523 50	33314	3523 50	33414	3523 51	33313
3523 51	33415	3523 52	33414	3523 59	33417
3523 66	33414	3523 75	33417	3523 81	33425
3523 82	33426	3523 83	33431	3523 84	33427
3523 91	33434	3523 92	33336	3523 93	33006
3523 94	33001	3523 95	33428	3523 98	33335
3523.AR	33428	3525 05	33006/1	3620 51	19310
3622 30	19440	3622 30	19459	3640 17	19421
3640 21	19312	3640 21	19415	3640 26	19422
3640 32	19449	3640 33	19450	3640 34	19425
3640 36	19428	3640 39	19426	3640 42	19459
3640 42	19440	3640 42	19427	3640 43	19426
3640 43	19437	3640 50	19389	3640 51	19473
3640 54	19499	3640 55	19498	3640 56	19491
3640 58	49309	3640 59	19491	3640 61	19491
3640 62	19491	3640 65	19491	3640 66	19491
3640 67	49099	3640 68	19372	3640 69	49309
3640 71	19425	3640 72	49309	3640 74	19394
3640 76	49099	3812 A0	19480	3812 A4	19023
3812 A9	19353	3812 C0	19443	3812 C0	19411
3812 C4	19374	3812 C6	19484	3812 C8	49400
3812 E0	19379	3812 E1	19479	3812 E2	19493
3812 F4	49401	3812 25	19410	3812 32	19446
3812 77	19405	3812 97	19323	3812 99	19409
3812.00	19379	3817 53	19477	3817 54	19478
3817 11	19420	3817 14	19417	3817 16	19418
3817 18	19301	3817 30	19417	3817 31	19418
3817 32	19481	3817 33	19481	3817 34	19483
3817 35	19482	3817 41	19417	3817 42	19418

Die aufgeführten Vergleichsnummern dienen nur zur besseren Identifikation.
References are only specified for a better identification.
Les références mentionées ne servent qu' á une meilleure identification.

CITROËN	MAPCO	CITROËN	MAPCO	CITROËN	MAPCO
3817 50	19301	3817 55	19489	3817 56	19490
3817 59	19477	3817 60	19478	3817 63	49306
3817 64	49307	3817 65	19393	3817 66	19393
3817 67	49312	3817 68	49313	3817 69	19496
3817 70	19497	3817 77	19496	4018 A3	19447
4018 A4	19448	4018 E0	19099	4018 00	19099
4059 09	19430	4059 12	19492	5 451 858	19416
5087 32	19339HPS	5087 33	19476HPS	5087 34	19337HPS
5087 35	19363	5087 37	19366	5087 39	19337HPS
5087 40	19338HPS	5087 41	19451HPS	5087 42	19367
5087 43	19362HPS	5087 45	19348HPS	5087 46	19337HPS
5087 48	19362HPS	5087 49	19451HPS	5087 50	19375HPS
5087 51	19376HPS	5087 52	19396	5087 53	19397
5087 59	19348HPS	5087 62	19375HPS	5091 10	49308
5094 36	33311	5094 40	33311/1	5094 57	33323
5094 57	33420	5094 59	33324	5094 60	33325
5094 65	33424	5094 66	33422	5131 69	33329
5131 70	33330	5131 71	33321	5131 72	33432
5131 73	33430	5152 62	33433	5178 46	49303
5178 52	49303	6939 51	19421	6946 77	19459
6946 77	19440	7 567 284	19422	75 792 433	19446
91 515 653	33306	91 516 334	19311	91 516 335	19310
91 516 336	19310	91 516 337	19311	91 519 409	19349
9404 059 080	19430	9458 084 180	19417	9458 084 280	19418
9471 000 565	19417	9471 000 665	19418	9471 007 565	19418
95 025 445	19427	95 395 440	19412	95 493208	19301
95 494 204	19312	95 494 204	19415	95 494 205	19415
95 494 205	19312	95 495 439	19412	95 495 440	19412
95 496 044	19413	95 496 045	19414	95 560858	19355/1
95 597 955	19470	95 603 308	33414	95 603 309	19419
95 608 843	19419	95 614 999	19472	95 615 000	19471
95 619 159	34413	95 658 978	19321	95 658 979	19322
95 685 513	19440	95 685 883	19440	9566 950 880	19023
96 032 460	19409	96 041 652	19415	96 041 652	19312
96 048 214	19411	96 048 214	19443	96 054 481	33420
96 064 481	33402	96 064 489	33400	96 064 491	33409
96 083 570	33437	96 087 507	19426	96 089 104	33403
96 093 233	19428	96 096 727	33307	96 103 696	19427
96 106 474	33415	96 110 483	33416	96 111 480	19435HPS
96 113 432	33414	96 133 608	19472	96 133 609	19471
96 136 394	19446/1	96 136 394	19410	96 145 457	19429HPS
96 147514	19476HPS	96 158 745	33421	96 158745	33337
96 177 836	19338HPS	96 288 787	19348HPS	96 324 274	19362HPS
96051398	33423	9651565180	49303	9750 079 980	19420

DACIA	MAPCO	DACIA	MAPCO	DACIA	MAPCO
6001547138	49160	6001547140	33127	6001547519	49151
6001547520	49151	6001547606	49194	6001547610	49192
6001547611	49193	6001549988	33173	6001549989	33173
6001550441	49194	6001550442	49192	6001550443	49193

Die aufgeführten Vergleichsnummern dienen nur zur besseren Identifikation.
References are only specified for a better identification.
Les références mentionées ne servent qu' á une meilleure identification.

DACIA	MAPCO	DACIA	MAPCO	DACIA	MAPCO
6001550446	49190	6001550446	49151	6001550447	49151
6001550447	49191	6040002245	33124	7700571173	19113
7701468820	19111	7701468821	19112	8200216376	49190
8200216377	49191	8200287912	33173	8200298455	49151
8200744091	49151	8200744092	49151		

DAEWOO	MAPCO	DAEWOO	MAPCO	DAEWOO	MAPCO
KBJR45	59718	07846696	59367	07848281	59295
07848282	59296	26001806	19719	26001807	19718
26200639	59367	4443003011	59210	45200A70B00	19518
45200A78B00	19518	4666005500	19557	4666005501	19557
48810A78B00	19517	520672	59217	520808	59217
520838	59217	521136	19517	521250	59718
521255	51292	521257	59717	7846696	59367
7848281	59295	7848282	59296	90189050	33785
90235040	33757	90375505	19714	93 740 622	51298
93 740 722	51298	93 740 723	51299	94788122	19714
96 403 099	51290HPS	96 815 893	51296	96 815 894	51297
96129753	59211	96185969	49756	96185970	49757
96185973	33752	96205809	59211	96207628	49297
96218397	49756	96218398	49757	96225858	49295
96225859	49296	96268438	49598	96268439	49597
96268440	49598	96268454	49290	96268455	49291
96275018	19718	96275019	19719	96275798	19558HPS
96300222	49298HPS	96300222	49298	96300627	19559HPS
96300648	19519	96305974	49597	96305975	49598
96316765	19518	96335966	33752	96391850	51294
96391851	51295	96391875	19558HPS	96391876	49298HPS
96391876	19558HPS	96403100	51291HPS	96415063	51294
96415064	51295	96446586	59211	96535087	33575
96535089	51300	96561754	51293HPS	96653381	33574

DAIHATSU	MAPCO	DAIHATSU	MAPCO	DAIHATSU	MAPCO
45046-87280	59215	45046-87281	59215	45046-87282	59215
45046-87503	19532	45046-87504	19532	45046-87580	19532
45046-87680	59207	45046-87780	59215	45046-87781	19598
45046-87782	19598	45046-87783	19598	45046-87784	19598
45047-87280	59216	45047-87281	59216	45047-87503	19531
45047-87504	19531	45047-87580	19531	45047-87680	59208
45047-87682	59209	45047-87780	59216	45047-87781	19597
45047-87782	19597	45047-87783	19597	45047-87784	19597
45503-87708	59214	45503-87711	59214	48068-87705	59212
48069-87705	59213	48069-87706	59213		

DF CITROEN	MAPCO	DF CITROEN	MAPCO	DF CITROEN	MAPCO
3640 60	19372				

EVOBUS	MAPCO	EVOBUS	MAPCO	EVOBUS	MAPCO
602 330 0003	49846	602 330 0103	49846	602 330 0303	49846
602 330 0403	49846				

FAW-AUDI	MAPCO	FAW-AUDI	MAPCO	FAW-AUDI	MAPCO
4B0 407 515	33876	4D0 407 181H	33839	4D0 407 182E	33840

Die aufgeführten Vergleichsnummern dienen nur zur besseren Identifikation.
References are only specified for a better identification.
Les références mentionées ne servent qu' á une meilleure identification.

FAW-AUDI	MAPCO	FAW-AUDI	MAPCO	FAW-AUDI	MAPCO
4D0 407 182G	33840	4D0 407 183AB	33932	4D0 407 183AC	33932
4D0 407 515C	33876	4D0 411 327G	33939	4D0 411 327H	33940
4D0 422 821A	49738	4D0407151H	49710OES	4D0407151P	49710OES
4F0 419 811C	49707HPS	4F0 419 811C	49707OES	8D0 411 317D	49683/1OES
8D0 411 317D	49683OES	8D0 411 318D	49684/1OES	8D0 411 318D	49684OES
8E0 407 151M	51710OES	8E0 407 151N	51710OES	8E0 407 151R	51710OES
8E0 407 505A	49680OES	8E0 407 505C	49680OES	8E0 407 506A	49681OES
8E0 407 506C	49681OES	8E0 407 509A	49791OES	8E0 407 509C	49791OES
8E0 407 510A	49792OES	8E0 407 510C	49792OES	8E0 407 510P	49792OES
8E0 407 694AG	49709OES	8E0 407 694Q	49709OES	8E0 419 811B	49707OES
8E0 419 811B	49707HPS	8E0 422 821	49738	8E0 422 821C	49738

FAW-VW	MAPCO	FAW-VW	MAPCO	FAW-VW	MAPCO
1KD 407 182	36950	1KD 407 365	51724	1KD 407 366	51725
1K0 199 231	36948	1K0 199 232J	36949	1K0 411 315D	51825HPS
1K0 411 315J	51825HPS	1K0 423 810A	51723	1K0 423 811G	51740
1K0 423 812G	51741				

FIAT	MAPCO	FIAT	MAPCO	FIAT	MAPCO
0007 695 190	19442	05 958 244	19043	07 591 277	19071
07 601 057	19054	07 601 062	19055	07 633 721	19043
07 636 995	19072	07 636 996	19073	07 695 185	19469
07 750 977	19066	07 750 978	19067	07 777 239	19056
07 777 240	19057	07 780 443	19009	07 780 444	19010
09 945 562	19079	1 346 384 080	49082	1 346 385 080	49083
1 903 652	19406	13 5222 5080	19495	13 5222 6080	19495
13 5222 7080	19494	13 5222 8080	19494	1300 473 080	19450
1300 716 080	19366	1302 368 080	19449	1304 640 080	33432
1304 641 080	33430	1306 003 080	19078	1306 003 080	19430
1306 716 080	19447	1308 600 080	19461	1308 601 080	19462
1308 664 080	19363	1308 664 80	19363	1308 694 080	33001
1308 759 080	19463	1308 760 080	19464	131 3084 080	19432
131 6736 080	19432	131 7389 080	19431	131 7390 080	19432
1312 317 080	33017	1313 083 080	19431	1313 083 080	19433
1313 084 080	19434	1316 735 080	19431	1316 735 080	19433
1316 736 080	19434	1317 238 080	19463	1317 239 080	19464
1317 240 080	19461	1317 241 080	19462	1317 389 080	19433
1317 390 080	19434	1317 425 080	19363	132 2664 080	19432
1320 755 080	19463	1320 756 080	33006	1320 756 080	19464
1320 786 080	19461	1320 787 080	19462	1322 664 080	19434
133 3755 080	19432	1331 209 080	19376HPS	1331 640 080	19498
1331 641 080	19499	1331 937 080	49086	1331 938 080	49084
1331 939 080	49087	1331 940 080	49085	1333 754 080	19433
1333 755 080	19434	13383 73 080	33001	1339 464 080	49086
1339 465 080	49084	1339 466 080	49087	1339 467 080	49085
1471 654 080	19448	17 736 515	34053	4 332 457	19025
4 336 779	19420	4 362 467	19025	4 362 470	19025
4 364 095	19025	4 388 159	19421	4 402 360	19041
4 402 361	19041	4 402 649	19044	4 402 672	19045
4 408 138	19048	4 410 415	19040	4 643 7951	49021

Die aufgeführten Vergleichsnummern dienen nur zur besseren Identifikation.
References are only specified for a better identification.
Les références mentionées ne servent qu' á une meilleure identification.

FIAT	MAPCO	FIAT	MAPCO	FIAT	MAPCO
4 645 4599	49021	42 534 911	19423	46 402 681	19066
46 402 682	19067	46 407 372	19054	46 407 373	19055
46 413 122	19026HPS	46 42 1522	33018	46 423 822	19056
46 423 823	19057	46 430 002	19066	46 430 003	19067
46 454 061	33047	46 454 062	33046	46 454 595	49022
46 454 596	49023	46 454 597	49024	46 454 598	49052
46 454 598	49025	46 456 049	19009	46 456 050	19010
46 456 189	49017	46 456 660	49018	46 462 626	19009
46 462 627	19010	46 474 556	19009	46 474 557	19010
46 476 755	33005	46 522 142	49065	46 525 407	49064
46 539 278	49024	46 539 278	49051	46 539 279	49025
46 539 279	49052	46 543 045	49038	46 545 660	49044
46 545 661	49045	46 546 776	49052	46 546 777	49051
46 764 746	49064	46 764 747	49065	46 767 267	49039HPS
46 777 741	49037	46 777 742	49036	46 779 293	49069
46 813 841	49037	46 813 842	49036	46 842 581	49069
5 1727 863	49090	5 5703 232	33044	5 927 292	33002
5 927 293	33003	5 939 683	19050	5 939 685	19051
5 958 246	19047	5 960 036	19042	5 960 037	19042
5 960 321	19452	5 960 834	19046	5 960 835	19046
5 983 406	19047	5 995 503	19048	50 006 262	49010
50 700 464	19028HPS	50 700 779	49042	50 700 797	49041
50 700 941	19028HPS	50 703 128	49054	50 703 129	49055
50 703 231	49079	50 703 232	49078	50 703 296	49066HPS
50 703 296	49066	50 704 262	33057	50 705 083	49041
50 705 084	49042	50 705 464	49094	50 705 465	49095
50 705 629	49099	50 708 823	49096	50 708 824	49097
50 709 579	49096	50 709 580	49097	50 710 620	49097
50 710 620	49096	50703128 part of	33069	50703129 part of	33069
51 701 045	19026HPS	51 712 407	49037	51 712 408	49036
51 717 000	49039HPS	51 717 001	49039HPS	51 727 865	49089
51 741 130	49749HPS	51 748 652	49624	51 748 653	49623
51 769 073	49037	51 769 074	49036	51 772 988	49037
51 772 992	49036	51 783 056	19098	51 783 057	19097
51 795 269	19028HPS	51 801 136	19028HPS	51 803 183	49749HPS
51 805 269	19028HPS	51 827 736	49094	51 827 737	49095
51 827 738	49095	51 832 937	49064	51 832 938	49065
51 839 218	49045	51 839 219	49044	51 842 192	49044
51 842 193	49045	51 857 021	49096	51 857 022	49097
51 857 133	49054	51 857 134	49055	51 866 700	49037
51 866 701	49036	55 700 751	33045	55 700 753	59026HPS
55 703 627	19098	55 703 629	19097	60 570 627	33009
60 588 843	19020	60 588 844	19021	60 588 845	19020
60 588 846	19021	60 801 528	19021	60 801 529	19020
60 809 242	33009	60 809 494	19053	60 809 495	19052
60 811 769	19009	60 811 770	19010	7 079 382	49020
7 079 383	49019	7 079 388	49019	7 081 835	49038
7 081 851	49070	7 082 812	49069	7 524 715	49073
7 543 028	19070	7 543 760	19071	7 558 962	19041

Die aufgeführten Vergleichsnummern dienen nur zur besseren Identifikation.
References are only specified for a better identification.
Les références mentionées ne servent qu' á une meilleure identification.

FIAT	MAPCO	FIAT	MAPCO	FIAT	MAPCO
7 567 282	19469	7 567 283	19468	7 567 284	19422
7 576 731	19442	7 576 732	19441	7 584 628	19070
7 591 215	19053	7 591 216	19052	7 591 277	19071
7 601 057	19054	7 601 062	19055	7 601 064	33019
7 601 065	33019	7 601 068	33035	7 601 261	19045
7 633 721	19043	7 636 995	19072	7 636 996	19073
7 658 273	19069	7 663 114	49076	7 663 115	49077
7 669 756	19042	7 673 581	33002	7 673 582	33003
7 674 825	49012	7 690 960	49010	7 693 816	49011
7 695 185	19469	7 695 186	19468	7 695 190	19442
7 695 191	19441	7 701 491	19068	7 705 615	19050
7 705 616	19051	7 736 514	49060	7 736 515	49061
7 750 977	19066	7 750 978	19067	7 752 285	19065
7 755 671	33039	7 756 218	33040	7 769 900	49062
7 769 901	49063	7 777 239	19056	7 777 240	19057
708 1842	49091	71 737 047	19431	71 737 048	19432
71 738 31	19056	71 738 432	19057	71 742 688	59024
71 747 915	19056	71 747 916	19057	7174 0107	36703
75 851 37	19048	76 010 372	19054	76 010 373	19055
77 362 279	19492	77 362 502	49071	77 362 503	49059
77 362 506	49072	77 362 507	49057	77 362 508	49058
77 363 830	59013	77 364 009	19497	77 364 253	19496
77 364 568	59012	77 364 569	59013	7736 2278	19099
7736 2280	19493	7736 3712	49621	7736 3713	49620
78 2024 9135	19404	82 387 676	19059	82 392 503	19058
82 406 867	19020	82 446 499	19060	82 461 062	19057
82 461 081	19056	82 461 082	19057	82 480 038	19021
82 480 039	19020	9 8810 139	49090	9 939 556	19058
9 939 557	19017	9 939 675	19022	9 941 080	19405
9 941 625	19022	9 945 562	19079	9 945 836	19448
9 946 948	19068	9 946 949	19065	9 947 436	19053
9 947 438	19053	9 947 438	19052	9 947 713	19023
9 947 714	19015	9 948 288	19042	9 948 343	19024
9 949 143	19042	9 949 217	49043	9 949 218	49040
9 983 325	19404	93 500 972	19433	93 500 973	19432
93 500 973	19434	93 501 180	19054	93 501 181	19055
93 501 485	49041	93 501 486	49042	93 501 488	49083
93 501 837	49099	93 501487	49082	9404 059 080	19430
9566 950 880	19023	96 158 71880	33337	97 5007 9980	19420
9790 002 680	19405	98 810 140	49089	98 845 024	49093
98 845 025	49093	98 845 030	19015	98 845 031	49075
98 845 032	49074	9947 926	49098		

FORD	MAPCO	FORD	MAPCO	FORD	MAPCO
EBG1	19727	EBG11	19748	EBG16	19741
EBG18	49645	EBG21	49646	EBG24	19757
EBG25	19758	EBG26	59657	EBG27	59665
EBG28	19646	EBG29	19753	EBG30	19752
EBG33	19646	EBG34	49641	EBG35	49640
EBG36	19750	EBG4	19736	EBG5	19735

Die aufgeführten Vergleichsnummern dienen nur zur besseren Identifikation.
References are only specified for a better identification.
Les références mentionées ne servent qu' á une meilleure identification.

FORD	MAPCO	FORD	MAPCO	FORD	MAPCO
EBG6	19745	EBJ1	19721	EBJ10	19749
EBJ2	19725	EBJ20	19744/1	EBJ21	19743/1
EBJ22	19738/1	EBJ23	19737/1	EBJ28	19747/1
EBJ29	19746/1	EBJ41	19751	EBJ45	19754
EBJ46	19763	EBJ47	19765	F3 2Z 3280A	19599
F5 RC 3280AA	49642	F5 RC 3280BA	19647	F5 RC 3280EA	49643
KT YC 153468AE	59643	W1 2T 104042BG	59675	W1 2T 1043042BG	59675
W1 2T 104305BG	59674	W1 2T 1043051BG	59674	W1 2T 143289AA	59676
W12T 145C486AD	51601	XS 4J M1C230BA	19777	YC 1 3L519BB	59642
YC 15 2519AA	59641	YC 15 3L519AB	59641	YC 15 32519BA	59642
YC 15 3289AA	59640	YC 15 3395AB	59643	YS 71 3B438AA	19601
YS413B438BA	19609HPS	YS415K743AB	59668	Y1 25 613042AH	59651
Y1 25 613051AH	59650	0 622 170	59658	1 000 445	33614
1 001 395	49866/2	1 001 396	49866/2	1 001 397	49866/1
1 001 398	49866	1 001 398	49866/1	1 003 609	33670
1 004 018	19604HPS	1 004 018	19608HPS	1 007 602	49876
1 009 591	49856HPS	1 010 037	33636	1 011 857	19641
1 011 858	19640	1 012 632	49877	1 014 654	33635
1 015 260	19643/1	1 015 264	19642/1	1 015 265	19642
1 015 546	19753	1 015 547	19752	1 020 174	19641
1 020 175	19640	1 020 214	19643	1 020 219	19657
1 020 220	19642	1 020 221	19656	1 020 496	49866
1 020 496	49866/2	1 020 497	49866	1 020 497	49866/1
1 021 219	19643/1	1 021 220	19642/1	1 023 058	33618
1 024 130	19724	1 024 130+1 015 546	19724/2	1 024 130+1 015 547	19724/1
1 028 441	19756/3	1 029 836	19762	1 030 025	19763
1 030 026	19765	1 030 277	19769	1 030 278	19768
1 032 099	19702	1 032 100	19702/1	1 032 101	19701
1 032 102	19701/1	1 032 567	19646	1 032 689	19645
1 033 616	19754	1 034 417	19645	1 034 417	19646
1 035 515	33670	1 035 690	49641	1 035 691	49640
1 035 929	33615	1 041 979	33642	1 044 014	19644
1 044 571	33928	1 045 413	19659HPS	1 045 656	19642/1
1 046 039	19643	1 046 073	19642	1 046 444	19702
1 046 445	19702/1	1 046 455	19701	1 046 458	19701/1
1 047 145	19750	1 047 797	19763	1 047 798	19765
1 047 853	19754	1 054 209	33632	1 054 209	33632/1
1 054 980	19756/2	1 054 981	19755/2	1 054 982	19756/3
1 054 984	19756/5	1 054 985	19755/5	1 054 986	19756/4
1 054 987	19755/4	1 054 988	19756/1	1 054 989	19755/1
1 055 191	33636	1 058 279	19761	1 058 279	19754
1 058 280	19754	1 058 280	19760	1 058 378	49858
1 058 380	49857	1 061 570	33676	1 061 631	19604HPS
1 061 631	19608HPS	1 061 659	59646	1 061 660	51607
1 061 666	59647	1 061 668	59668	1 061 670	33678
1 061 702	59648	1 063 223	19657	1 063 226	19643
1 063 236	19643/1	1 063 246	19656	1 063 248	19642
1 063 255	19642/1	1 063 372	33635	1 063 985	19702
1 063 986	19701	1 063 987	19702/1	1 063 988	19701/1

Die aufgeführten Vergleichsnummern dienen nur zur besseren Identifikation.
References are only specified for a better identification.
Les références mentionées ne servent qu' á une meilleure identification.

FORD	MAPCO	FORD	MAPCO	FORD	MAPCO
1 064 128	59647	1 067 818	19608HPS	1 067 818	19604HPS
1 070 171	51606	1 070 172	51605	1 070 337	19756/2
1 070 338	19755/2	1 071 336	19608HPS	1 071 336	19604HPS
1 071 338	51608	1 071 339	51609	1 071 683	19643
1 071 690	19657	1 071 694	19643/1	1 071 701	19642
1 071 702	19656	1 072 279	19642/1	1 072 453	51617
1 073 214	19652	1 073 215	19651	1 073 217	33644
1 073 249	33671	1 074 282	33618	1 074 305	19649
1 074 306	19648	1 085 520	19650	1 090 730	19652
1 090 738	19651	1 092 376	49866/2	1 092 377	49858
1 092 380	49857	1 092 382	49866/1	1 092 382	49866
1 097 316	49641	1 097 323	49640	1 102 771	33670
1 105 524	59668	1 106 269	19601	1 107 013	19649
1 107 015	19648	1 107 068	19609HPS	1 111 156	49861
1 111 410	19756/3	1 111 411	19756/1	1 111 412	19755/3
1 111 413	19755/1	1 111 769	19609HPS	1 114 803	59644
1 116 578	59645	1 116 579	59644	1 116 608	51618
1 117 698	19773HPS	1 117 698	19777	1 117 800	19775HPS
1 117 800	19775	1 117 801	19776HPS	1 117 857	51615
1 117 859	51614	1 118 476	33646	1 118 920	51615
1 118 921	51614	1 121 508	49866/2	1 121 509	49866/1
1 122 566	51617	1 124 077	51606	1 124 078	51608
1 124 079	51605	1 124 242	51613	1 127 646	19773HPS
1 127 648	19775HPS	1 127 648	19775	1 128 725	33629/2
1 130 273	19604HPS	1 130 273	19609HPS	1 130 273	19608HPS
1 130 452	19776HPS	1 135 077	19604HPS	1 135 077	19609HPS
1 136 072	59646	1 136 073	51607	1 138 160	19652
1 138 161	19651	1 138 275	59640	1 138 313	59672
1 138 314	59672	1 138 523	51608	1 138 525	51605
1 139 926	59645	1 139 928	59644	1 141 293	19769
1 141 294	19768	1 141 774	49856HPS	1 146 130	59651
1 146 131	59650	1 146 150	19774	1 146 150	19774HPS
1 149 802	59645	1 150 353	59647	1 202 548	59670
1 202 549	59669	1 203 093	59648	1 203 923	59645
1 203 924	59644	1 206 474	51613	1 207 447	59651
1 207 448	59650	1 207 973	19652	1 207 974	19651
1 207 974	19653	1 209 035	19609HPS	1 212 807	59651
1 212 808	59650	1 212 809	19652	1 212 809	19653
1 212 810	19653	1 212 810	19651	1 214 290	51617
1 214 911	59651	1 214 912	59650	1 217 036	19659HPS
1 219 697	19777	1 220 005	51616	1 223 792	59664HPS
1 230 619	51616	1 230 905	59664HPS	1 230 909	59664HPS
1 233 552	49866/1	1 233 553	49866/2	1 234 258	49858
1 234 259	49857	1 234 371	51603	1 234 375	51602
1 304 124	33678	1 310 333	51610	1 311 416	59645
1 311 416	33647	1 311 417	59644	1 317 609	59646
1 325 326	51618	1 328 380	51603	1 328 381	51602
1 329 730	59646	1 330 219	19643	1 330 235	19642
1 330 236	19657	1 330 237	19656	1 330 238	19643/1

Die aufgeführten Vergleichsnummern dienen nur zur besseren Identifikation.
References are only specified for a better identification.
Les références mentionées ne servent qu' á une meilleure identification.

FORD	MAPCO	FORD	MAPCO	FORD	MAPCO
1 330 239	19642/1	1 332 074	51603	1 332 075	51602
1 332 453	51600HPS	1 332 455	59674	1 332 463	51601
1 335 548	51610	1 344 966	19652	1 344 968	19651
1 355 048	59675	1 355 050	59674	1 361 653	49856HPS
1 362 650	51603	1 362 651	51602	1 362 652	51603
1 377 416	51625	1 377 846	51623	1 377 849	51621
1 385 593	51623	1 403 408	51623	1 419 814	51623
1 425 853	51625	1 426 875	51623	1 433 273	51620
1 433 274	51619	1 435 745	51623	1 447 222	19727
1 448 127	51607	1 448 621	19702	1 448 622	19701
1 458 773	51623	1 460 693	51622	1 466 186	51623
1 466 188	51622	1 469 026	51622	1 469 208	51610
1 476 246	19732	1 477 860	51602	1 500 111	59668
1 507 181	51623	1 507 182	51622	1 517 403	59646
1 540 281	19028HPS	1 546 259	49057	1 546 260	49058
1 571 221	19727	1 580 517	19028HPS	1 591 066	19721
1 613 106	19654	1 619 120	33609	1 632 769	33677
1 637 182	19744/1	1 637 184	19743/1	1 637 185	19743/1
1 652 910	33611	1 656 752	33627	1 659 374	19722
1 659 674+1 034 417	19722/2	1 659 674+5 021 410	19722/1	1 661 237	19604HPS
1 661 237	19608HPS	1 666 243	51604	1 796 515	59658
1 954 430	19535	1 954 431	59520	1 954 778	49226HPS
1 954 821	49227HPS	1 961 668	19534	1 961 669	19533
1M21 5489AA	49856HPS	1S 61 3B438AA	19608HPS	1S 7C 3280BB	59666
1S 71 3B438AB	19773HPS	1S 71 3B438AC	19773HPS	1S 71 3B438BA	19777
1S 71 3042AN	59645	1S 71 3051AN	59644	1S 71 3395AE	59673
1S 71 5C486AC	19775HPS	1S 71 5C486AC	19775	1S 71 5C486AD	19775
1S 71 5C486AD	19775HPS	1S 71 5C486BC	19776HPS	1S 81 5C486BE	19776HPS
1011857+1044014	19644/2	1011858+1044014	19644/1	2M513042BD	19652
2S 6J 3289AC	59670	2S 6J 3290AC	59669	2S 61 3B438AC	19774
2S 61 3B438AC	19774HPS	2S 61 3042AH	59651	2S 61 3051AH	59650
2S 61 3395AB	59671	2T14 5C486 AE	51601	2T14 5C486 AG	51601
2T143B438BA	51600HPS	2T143B438BB	51600HPS	3 251 449	51581
3 252 249	51540	3 252 250	51537	3 702 281	49643
3 707 333	19650	3 707 533	19650	3 903 147	49642
3 903 148	49643	3 903 149	49643	3M 51 3B438AA	59664HPS
3M 51 3B438AB	59664HPS	3M 51 5K896AC	33678	3M515C486BC	51610
3M515C486BD	51610	4 042 022	59662	4 042 023	59661
4 047 091	59640	4 048 739	19722	4 059 923	59642
4 059 923	59641	4 059 924	59642	4 059 924	59641
4 111 327	59666	4 118 933	59672	4 118 934	59672
4 120 734	59643	4 173 761	59643	4 342 539	59663
4 366 973	59675	4 366 974	59674	4 367 012	51600HPS
4 372 130	59662	4 372 130	59661	4 372 131	59661
4 372 131	59662	4 381 840	59676	4 381 927	59643
4 436 609	51601	4 472 940	59663	4 539 871	59675
4 540 774	59662	4 540 775	59661	4 577 976	59642
4 602 028	59641	4 616 978	59643	4 628 189	51606
4 628 835	51605	4 628 840	51608	4 628 841	51609

Die aufgeführten Vergleichsnummern dienen nur zur besseren Identifikation.
References are only specified for a better identification.
Les références mentionées ne servent qu' á une meilleure identification.

FORD	MAPCO	FORD	MAPCO	FORD	MAPCO
5 021 410	19727	5 021 411	19732	5 021 413	19736
5 021 414	19735	5 021 415	19745	5 021 425	19721
5 021 426	19725	5 021 430	19749	5 021 442	19748
5 021 443	59658	5 021 445	49646	5 021 446	19742
5 021 447	19741	5 021 449	49646	5 021 458	19744/1
5 021 459	19743/1	5 021 460	19738/1	5 021 461	19737/1
5 021 464	19747/1	5 021 465	19746/1	5 021 661	33611
5 021 729	33627	5 024 332	19753	5 024 333	19752
5 025 557	49645	5 025 558	49646	5 025 676	19751
5 027 451	19757	5 027 452	19758	5 030 221	59657
5 030 222	59665	6 G9N 3B438BA	51621	6 042 743	33608
6 047 768	19721	6 081 391	19727	6 087 890	33610
6 107 025	33611	6 111 394	19721	6 114 616	19738/1
6 114 617	19737/1	6 120 231	19736	6 120 232	19735
6 127 716	19745	6 127 726	19723	6 128 814	19727
6 130 558	19725	6 130 559	19725	6 130 560	19725
6 131 083	19654	6 132 991	19655	6 135 757	19655
6 141 919	33645	6 141 944	59667	6 144 628	33627
6 149 939	19738/1	6 149 940	19737/1	6 150 970	19780
6 150 971	19781	6 154 161	19749	6 156 450	19748
6 156 463	19740	6 158 242	59667	6 160 988	19745
6 163 543	19742	6 168 182	59667	6 172 639	59658
6 172 643	19748	6 176 886	19655	6 180 350	19724
6 180 393	19724	6 185 334	19723	6 185 334+5 021 410	19723/1
6 185 336	19654	6 185 338	19655	6 185 809	33628
6 185 809	33628/2	6 186 195	19655	6 192 705	33609
6 192 705	33677	6 193 085	19756/1	6 193 086	19755/1
6 197 238	49737	6 197 402	19740	6 422 979	19655
6 517 356	33675	6 517 364	19750	6 521 811	33673
6 521 812	33674	6 525 843	19761	6 525 844	19760
6 525 844	19754	6 555 936	19753	6 555 938	19752
6 589 456	49645	6 589 456	49646	6 589 457	49646
6 608 818	33672	6 608 830	59655	6 608 832	59654
6 615 742	19761	6 615 743	19760	6 639 188	19722
6 645 154	19756/1	6 645 155	19756/5	6 645 156	19755/1
6 645 157	19755/5	6 650 261	19751	6 687 191	19750
6 705 519	19756/4	6 714 195	33629/2	6 737 692	19647
6 770 224	19754	6 770 224	19761	6 770 225	19754
6 770 225	19760	6 790 115	33616	6 790 700	19722
6 792 900	19742	6 792 901	19741	6 867 577	19658
6 869 951	19740	6 869 951	49644	6 870 115	33618
6 870 549	33617	6 870 549	33616/7	6 915 411	33634
6 924 365	19751	6 954 470	19769	6 954 471	19768
6 960 036	19605HPS	6 969 517	19645	6 969 517	19646
6 969 518	19646	6 969 518	19645	7 014 210	33633
7 014 210	33633/1	7 078 614	59657	7 102 392	33628/2
7 102 392	33628	7 102 644	19761	7 102 645	19760
7 144 202	33630	7 144 204	33631	7 152 269	19756/2
7 152 270	19756/3	7 152 271	19755/2	7 152 272	19755/3

Die aufgeführten Vergleichsnummern dienen nur zur besseren Identifikation.
References are only specified for a better identification.
Les références mentionées ne servent qu' á une meilleure identification.

FORD	MAPCO	FORD	MAPCO	FORD	MAPCO
7 152 276	19756/5	7 152 277	19756/4	7 152 278	19756/1
7 152 279	19755/5	7 152 280	19755/4	7 152 281	19755/1
7 200 944	49866/2	7 200 945	49866/1	7 200 946	49861
7 200 959	49856HPS	7 201 717	33908	7 243 564	19753
7 243 565	19752	7 257 202	29795	7 260 111	19659HPS
7 270 635	33864	7 292 944	59657	7 292 960	19762
7 294 415	19647	7 351 747	19761	7 351 747	19754
7 351 748	19760	7 351 748	19754	7 371 059	33643
7 396 830	33928	7 398 676	49866/2	7 398 678	49866/1
7 403 748	33864	71 BB 3289AB	19732	77 FB 3432AB	33608
8 185 335	19654	81 AB 3063AA	33610	81 AB 3063BB	33609
81 AB 5K897BB	33611	83 BB 3L519EA	19654	83 BB 5K817BA	33645
85 GB 3063AB	33677	85 GB 3063AC	33677	86 VB 3B438AA	19780
86 VB 3B439AA	19781	86 VB 5489BB	59667	86VB 3285 A2B	59658
86VB-3395A1C	19749	86VB-3395A1D	19749	86VB-3395A2C	19749
86VB-3395A2E	19749	87 AB 3L519BA	19723	87 BB 3L519DA	19654
87 BB 3L519EA	19654	87GB-3L519BA	19655	88 GB 5493AA	33627
88 OX 3270DA	19736	88 OX 3270EA	19735	88 VB 3285AB	19742
88 VB 3286AB	19741	88 VB 3286AD	19741	88 VB 3825AD	19742
88OX-3B3376CA	19744/1	88OX-3B37DA	19737/1	88OX-3B376DA	19738/1
88OX-3B377CA	19743/1	88OX-3K209BA	19721	88OX-3K209CA	19725
88OX-3K209GA	19749	88OX-327FA	19745	88OX-3270AA	19727
88OX-3270LA	19748	89 FB 3B734A2D	29795	89 FB 3063AD	33614
89 FB 5484BA	33628	89FB 5484 BA	33628/2	89FB-3B438A1E	19604HPS
89FB-3B438A1F	19604HPS	89FB-3395AB	19754	9S513270BA	49058
90 VX 3270AA	49645	90 VX 3270AA	49646	91 AB 3A262 AA	33615
91 AB 3L519AA	19724	91 AB 3L519CB	49737	91AB-3051AD	19760
91AX-3270AA	19753	91AX-3270BA	19752	92 VB 3A052AC	59655
92 VB 3A053AC	59654	92 VB 3L519AA	19740	92 VB 3L519AB	49644
92 VB 3L519AB	19740	92 VB 3069AA	33675	92 VB 3395 A2C	19751
92 VB 3432AA	33672	92 VB 5484AA	33673	92 VB 5484BA	33674
92AB-3042BA	19761	92AB-3051BA	19760	92VX-3K209AA	19751
92VX-3270AA	19750	93 BB 3A262BA	33617	93 BB 3B438CA	19605HPS
93 BB 3063AA	33616	93 BB 3395AC	19759	93 BB 4A037AC	33630
93 BB 4A037EA	33631	93 BB 5C493AC	33634	93 BB 5K566AC	33633
93 BB 5K566AC	33633/1	93 BB 5K566AH	33632	93 BB 5K652AC	19658
93 BB 5484AB	33629/2	93 BX 3270AA	19757	93 BX 3270BA	19758
94 AB 5484AA	33628	94 AB 5484AA	33628/2	94 FB 3B376AA	19763
94 FB 3B376BA	19765	94 FB 3042AB	19756/2	94 FB 3042AD	19756/2
94 FB 3042BA	19756/3	94 FB 3042CA	19756/5	94 FB 3042CB	19756/5
94 FB 3042DA	19756/4	94 FB 3042DB	19756/4	94 FB 3042EB	19756/1
94 FB 305AD	19755/2	94 FB 305CB	19755/5	94 FB 305EB	19755/1
94 FB 3051BA	19755/3	94 FB 3051CA	19755/5	94 FB 3051DA	19755/4
94 FB 3051DB	19755/4	94 FB 3395B2A	19765	94 FX 3042BC	19756/3
94 FX 3042EB	19756/1	94 FX 305BC	19755/3	94FX-3270AA	19646
95 AB 5K 653CA	33643	95 BG 3A262 BA	33618	95 GB 3B438AC	19659HPS
95 GB 3B438AD	19659HPS	95 GB 3B438AF	19659HPS	95 GB 3L519BA	19762
95 GB 3L519BB	19762	95 GX 3270BA	59665	95 VW 3A262CA	33928
95 VW 3078AC	49877	95 VW 3079AC	49876	95 VW 3280BB	49858

Die aufgeführten Vergleichsnummern dienen nur zur besseren Identifikation.
References are only specified for a better identification.
Les références mentionées ne servent qu' á une meilleure identification.

FORD	MAPCO	FORD	MAPCO	FORD	MAPCO
95 VW 3280BC	49858	95 VW 3281 BB	49857	95 VW 3281 BC	49857
95 VW 3395AA	49861	95 VW 5A638CA	33908	95 VW 5K818BC	33864
95 VW 5489AB	49856HPS	95 VW 5489AC	49856HPS	95AB-3051AB	19760
95AB-3051AD	19760	95AB-3395A1A	19754	95AX-3270AA	19753
95AX-3270BA	19752	96 B3 289AD	19641	96 FB 3A262AD	33635
96 FB 3L519BA	19644	96 FB 3042 BF	19643/1	96 FB 3063AB	33636
96 FB 3290AC	19640	96 FB 3395AB	19653	96 FB 5484CA	33670
96 FB-3B438-AB	19608HPS	96 FX 3289AA	19641	96 FX 3290AA	19640
96FB-3B376AB	19754	96FB-3B438AB	19604HPS	96FB-3042AH	19657
96FB-3051AH	19656	96FB-3051BF	19642/1	96FB-3051CC	19642
97 AG 5K653AA	33642	97 BG 3042AA	19769	97 BG 3051AA	19768
97 BX 3289AA	49641	97 BX 3290AA	49640	97 KB 3042AD	19702
97 KB 3042BC	19702/1	97 KB 3042EB	19702	97 KB 3042FB	19702/1
97 KB 305BD	19701/1	97 KB 3051AD	19701	97 KB 3051BC	19701/1
97 KB 3051EB	19701	97 KB 3051FB	19701/1	97 KB 5484AA	33670
97 KX 3270AA	19645	97 X3-270AA	19750	97VX-3K 209AA	19751
98 AG 3L519AA	19650	98 AG 3063AE	33676	98 AG 3289AA	19649
98 AG 3290AA	19648	98 AG 4A037BA	33671	98 AG 5K652AK	59647
98 AG 5K743AF	59668	98 AG 5K896AB	33678	98 AG 5484DA	33644
98 AG 5495AB	59648	98 AG 5500AG	59646	98 AG-3B438-AB	19608HPS
98 AG-3B438AB	19604HPS	98 AX 3270AA	19649	98 AX 3270BA	19648
98 BG 3A262AA	33618	98 FB 3A262AA	33635	98 FB 3063AA	33636
98AG 3051 AJ	19651	98AG-3042AJ	19652	98FB 3051 AC	19642
98FB-3042BD	19657	98FB-305DB	19656	98FB-3395AB	19754

FORD USA	MAPCO	FORD USA	MAPCO	FORD USA	MAPCO
F02Z3A130A	59350	1 405 940	19599	1S715K652AB	51615
1S715K652AC	51615	1S715K652BC	51617	1S715K652CA	51617
1S715K743AB	51614	1S715K743AC	51614	1S715K743CA	51616
1S715K898AF	51613	1S715K898AG	51613	1S715500AA	51618
1S715500AC	51618	2S715K743BA	51616	3 405 915	19589
3 405 915	59350	3 405 940	19599	3 410 591	19591HPS
3 410 592	19590HPS	3 703 255	49582	3 707 090	49583
3 799 085	19592HPS	6G 9N3B438BA	51621	6G91 3289AA	51620
6G913 290AA	51619	6G915C486XAA	51625	6G915C486XAB	51625

GENERAL MOTORS	MAPCO	GENERAL MOTORS	MAPCO	GENERAL MOTORS	MAPCO
0350260S1	33726	07840452	19800	07840453	19805
09118127	19638	09118127	19637	09161563	49138
09228477	19623	13 140039	49608	13 167 940	33045
13125492	36764	13138151	33796	13140037	49608
13140038	49609	13140040	49609	13169439	19639
1603163	19612	24 417251	49749HPS	24413015	49623
24413016	49624	24428977	49608	24428978	49609
26010028	19805	26011925	19800	26030411	49754
26032284	49755	26059293	49607	26059294	19638
26059294	19637	26065265	19631	26087867	19810
26087868	19800	55 700753	59026HPS	90 105 358	59367
90 140 007	19718	90 268 463	33714	90 335 966	33752
90 373 264	33714	90 495 046	33714	90 498181	19628

Die aufgeführten Vergleichsnummern dienen nur zur besseren Identifikation.
References are only specified for a better identification.
Les références mentionées ne servent qu' á une meilleure identification.

GENERAL MOTORS	MAPCO	GENERAL MOTORS	MAPCO	GENERAL MOTORS	MAPCO
90094763	19711	90125567	59295	90125568	59296
90135359	33795	90140006	19719	90166390	19806
90166391	19807	90166394	19801	90170152	33793
90188593	19816	90189050	33785	90216318	33767
90217845	33737	90223456	33787	90235040	33757
90250709	33714/9	90250986	33879	90272194	19617
90272195	19618	90272683	19714	90278577	33727
90278624	33730	90279193	33716	90288387	19624
90289915	49604	90295324	19801	90297863	19612
90297863	19802	90299207	33848	90304625	49752
90304626	49753	90305431	33786	90334027	19803/1
90334028	19804/1	90334031	19613	90334032	19614
90334035	49600	90334035	19615	90334036	49601
90334036	19616	90334925	33895	90344207	33754
90369704	19610	90369705	19611	90373521	49752
90373522	49753	90373523	49604	90373771	33739
90373778	33725	90373854	33715	90375505	49756
90375506	49757	90392553	49760	90444294	19801
90445097	33733	90445098	33734	90445137	19606HPS
90445565	33849	90445571	33848	90445625	33791
90445644	19812	90445646	19813	90447156	33753
90447157	33766	90447867	33729	90447868	33755
90447869	33760	90447946	33735	90468567	33789
90468636	33732	90468638	33731	90468930	19606HPS
90473811	49758	90473812	49759	90487561	19621
90495045	19607	90495103	19619	90495104	19620
90495585	33720	90496014	49600	90496014	19615
90496015	19616	90496015	49601	90496039	19622
90496040	19623	90496116	19600HPS	90496681	33758
90496686	33736	90496700	33877	90496706	33792
90496721	33756	90498735	19633	90498736	19634
90498740	33794	90498745	19639	90510639	49600
90510639	19615	90510640	19616	90510640	49601
90510641	19803/1	90510642	19804/1	90510643	19613
90510644	19614	90510649	19812	90510650	19813
90510651	19615	90510651	49600	90510652	19616
90510652	49601	90510653	49758	90510654	49759
90511260	19808	90511261	19809	90512775	19626
90512982	19621	90538865	33761	90542572	19635
90542573	19636	90542574	19632	90556788	19629
90576775	33849	90576789	19630	91160043	49143
91160044	49144	91167000	49118HPS	91167000	49118
9118127	19638	9118127	19637	9118128	49607
9156605	33848	9160498	49109HPS	9160499	49108HPS
9161562	49137	9161563	49138	9191309	33720
9196394	49610	9228477	19623	93 171448	36703
93 192421	19810	93 193130	51253	93 193131	51252
93 194002	51251	93 194035	51250	93 195093	51255
93192446	19631	94459453	49744	94459465	49745

Die aufgeführten Vergleichsnummern dienen nur zur besseren Identifikation.
References are only specified for a better identification.
Les références mentionées ne servent qu' á une meilleure identification.

GENERAL MOTORS	MAPCO	GENERAL MOTORS	MAPCO	GENERAL MOTORS	MAPCO
94459480	49743	94459481	49742	97018125	51594HPS
97018125	51594	97020953	49743	97020954	49742
97184821	49626				

HONDA	MAPCO	HONDA	MAPCO	HONDA	MAPCO
51220-SD4-004	59333	51220-SD4-013	59333	51220-SD4-023	59333
51220-SH3-003	19503	51220-SK7-013	19503	51220-SM1-A01	19507
51220-SM1-A02	19507	51220-SM4-013	19507	51220-SR0-A01	49510
51220-SR3-003	49510	51220-S04-003	49510	51220-S84-A02	19507
51270-SR3-013	51504	51270-SR3-023	51504	51270-S0A-003	51504
51270-S01-013	51504	51270-S01-023	51504	51270-S04-013	51504
51270-S04-023	51504	51270-S84-A01	51504	51320-SK-000	19957
51320-ST7-003	51505	51320-S04-003	49200HPS	51320-S2H-003	59243
51320-S84-A01	59500	51321-S2H-003	59244	51321-S84-A01	59501
51350-SAA-E01	51503	51350-SAA-E11	51503	51350-SEL-T01	51503
51350-SR3-A01	49216	51350-SR3-A02	49216	51350-SR3-010	49216
51350-SR3-020	49216	51350-ST3-G00	49216	51350-ST7-010	49216
51350-S01-000	49501	51350-S04-G00	49501	51350-S04-000	49501
51350-S10-A00	49218	51350-S10-G00	49218	51351-SB2-013	59331
51355-SH3-010	59507	51355-SH3-020	59507	51355-SM4-040	49509
51355-SN7-010	49509	51355-SV4-000	49210	51355-SV7-A00	49210
51355-S84-A00	49214	51360-SAA-E01	51502	51360-SAA-E11	51502
51360-SEL-T01	51502	51360-SR3-A01	49215	51360-SR3-A02	49215
51360-SR3-020	49215	51360-ST3-E02	49215	51360-ST3-G00	49215
51360-ST7-010	49215	51360-S04-G00	49500	51360-S10-A00	49217
51360-S10-G00	49217	51361-SB2-013	59330	51365-SH3-010	59506
51365-SH3-020	59506	51365-SM4-040	49508	51365-SN7-010	49508
51365-SV4-000	49209	51365-SV7-A00	49209	51365-S84-A00	49213
51391-S5A-024	33226	51392-SR3-024	33527	51393-SE0-003	33522
51393-SH3-003	33521	51393-SN7-003	33222	51393-SV1-A01	33222
51395-SR3-N02	33526	51396-SR3-N02	33526	51396-SR3-N03	33526
51450-SDA-A01	51501	51450-SH3-000	49512	51450-SH3-023	49512
51450-SH3-030	49512	51450-SM4-013	49507	51450-SM4-023	49507
51450-SR0-A02	59509	51450-SR3-A02	49503	51450-SR3-013	59509
51450-SR3-013	49503	51450-SR3-023	59509	51450-SR3-023	49503
51450-ST7-020	59509	51450-SV4-A00	49206	51450-SV4-000	49206
51450-S01-023	49514	51450-S04-003	49514	51450-S04-013	49514
51450-S04-023	49514	5145-0S1-AE01	49212	51450-S10-020	49261
5145-0S8-4A01	49212	51459-SN7-003	49507	51460-SDA-A01	51500
51460-SH3-000	49511	51460-SH3-023	49511	51460-SH3-030	49511
51460-SH3-030	49512	51460-SM4-013	49506	51460-SM4-023	49506
51460-SR0-A02	59508	51460-SR3-A02	59508	51460-SR3-A02	49502
51460-SR3-013	59508	51460-SR3-013	49502	51460-SR3-023	59508
51460-SR3-023	49502	51460-ST7-020	59508	51460-SV4-A00	49205
51460-SV4-000	49205	51460-S01-023	49513	51460-S04-003	49513
51460-S04-013	49513	51460-S04-023	49513	51460-S1A-E01	49211
51460-S10-020	49260	51460-S84-A01	49211	51469-SN7-003	49506
51810-SH3-004	33521	51810-SV4-003	33221	52306-SE0-A00	51506
52306-SE0-030	49267	52320-S04-003	49201	52320-S10-003	49268HPS
52320-S2H-003	51508HPS	52320-S30-003	59245	52320-S5A-013	59242

Die aufgeführten Vergleichsnummern dienen nur zur besseren Identifikation.
References are only specified for a better identification.
Les références mentionées ne servent qu' á une meilleure identification.

HONDA	MAPCO	HONDA	MAPCO	HONDA	MAPCO
52320-S84-A01	59502HPS	52320-S84-A01	59502	52320-S9A-003	51542HPS
52320-S9A-305	51542HPS	52321-S04-003	49202	52321-S10-003	49269HPS
52321-S2H-003	51507HPS	52321-S5A-013	59241	52321-S9A-003	51541HPS
52321-S9A-305	51541HPS	52325-S84-A01	59503HPS	52365-SH3-014	33525
52370-SH3-000	33520	52385-SR3-000	33520	52385-ST3-G01	33223
52390-SH3-000	33524	52390-SM1-A03	49204	52390-SM4-033	49204
52390-SM5-A03	49204	52390-SR0-A00	49263	52390-SR0-A00	49505
52390-SR3-A00	49263	52390-SR3-000	49505	52393-SM4-003	33523
52393-SM4-004	33523	52393-SM4-013	33523	52393-SR0-004	33220
52393-SR3-004	33220	52395-SH3-004	33528	52395-SH3-005	33528
52400-SM4-033	49203	52400-SR0-A00	49504	52400-SR0-A00	49262
52400-SR3-A00	49262	52400-SR3-A00	49504	52400-SR3-000	49504
52622-SH3-000	33224	52622-SH3-003	33224	52622-SH3-004	33224
52622-SH3-010	33225	52622-SH3-013	33224	53010-SR3-010	59557
53010-ST0-000	59557	53010-ST7-J61	59557	53010-SV4-000	59246
53010-S04-J51	59512	53010-S04-J51	19502	53010-S04-000	19502
53010-S04-000	59512	53010-S10-000	59513	53010-S2H-J01	59558
53010-S2H-J02	59558	53010-S84-A01	59514	53521-SD4-003	59247
53521-SD4-023	59247	53521-SH3-003	19502	53521-SH3-003	59512
53521-SM4-003	19506	53521-SM4-013	19506	53540-SA0-002	59319
53540-SB2-003	59319	53540-SC2-004	59319	53540-SD4-003	59372
53540-SH3-003	19501	53540-SH3-013	19509	53540-SH3-013	19501
53540-SK3-E01	19956	53540-SM4-003	19505	53540-SM4-004	19505
53540-SP0-013	59249	53540-SP0-023	59249	53540-SR0-A01	19509
53540-SR3-A01	19509	53540-SR3-003	19509	53540-SS0-003	59311
53540-SS0-004	59311	53540-ST7-003	19509	53540-SV4-013	59312
53540-SX0-003	59312	53540-SX8-T01	59515	53540-S04-003	19509
53540-S04-013	19509	53540-S1A-E01	49265	53540-S84-A01	59312
53540-611-020	59319	53540-679-004	59319	53560-SD4-003	59371
53560-SH3-003	19508	53560-SH3-013	19508	53560-SM4-003	19504
53560-SM4-004	19504	53560-SP0-013	59314	53560-SP0-023	59314
53560-SR0-A01	19508	53560-SR3-003	19508	53560-SR3-003	19500
53560-SS0-003	59315	53560-SS0-004	59315	53560-ST7-003	19508
53560-SX0-003	59313	53560-S04-003	19508	53560-S04-013	19508
53560-S1A-E01	49264	53560-S84-A01	59313	90112-SE0-000	49517

HYUNDAI	MAPCO	HYUNDAI	MAPCO	HYUNDAI	MAPCO
MB24-1818	59224	MB527-38401	49248	51760-2G000	51239
51760-2H000	51239	54400-4A000	59386	54401-4A000	59387
54410-38000	59382	54417-4AA00	59327	54417-43001	49247
54420-38000	59383	54500-02000	51211	54500-02050	51211
54500-02051	51211	54500-02052	51211	54500-1C000	59378
54500-1C010	59378	54500-17000	51218	54500-2D000	51220
54500-2D001	51220	54500-2D002	51220	54500-2D500	51220
54500-2D501	51220	54500-2H000	51232	54500-2H100	51232
54500-22200	59291	54500-25000	59376	54500-27000	51234
54500-29000	51234	54500-29500	51234	54500-3K000	51224
54500-3K060	51224	54500-3K500	51224	54500-38011	59384
54500-4A000	51216	54501-02000	51212	54501-02050	51212
54501-02051	51212	54501-02052	51212	54501-1C000	59379

Die aufgeführten Vergleichsnummern dienen nur zur besseren Identifikation.
References are only specified for a better identification.
Les références mentionées ne servent qu' á une meilleure identification.

HYUNDAI	MAPCO	HYUNDAI	MAPCO	HYUNDAI	MAPCO
54501-1C010	59379	54501-17000	51219	54501-2D000	51221
54501-2D001	51221	54501-2D002	51221	54501-2D500	51221
54501-2D501	51221	54501-2H000	51233	54501-2H100	51233
54501-22100	59291	5450122200	59292	54501-25000	59376
54501-25000	59377	54501-27000	51235	54501-29000	51235
54501-29500	51235	54501-3K000	51225	54501-3K060	51225
54501-3K500	51225	54501-38011	59385	54501-4A000	51217
54502-24000	59576/1	54502-24001	59576	54502-24001	59576/1
54502-24101	59576/1	54503-22A00	49255	54503-24000	59577/1
54503-24001	59577/1	54503-24001	59577	54503-24101	59577/1
54503-25A00	49255	54503-31600	49255	54503-34A00	59585
54503-34A01	59585	54510-43150	49940	54510-43152	49940
54530 3J000	51228	54530-02050	59580	54530-02500	59580
54530-24A00	19511	54530-24000	19511	54530-28A00	19513
54530-28000	19513	54530-31600	49255	54530-4AA00	59329
54530-4A000	59329	54530-47000	59329	54540-43150	49941
54540-43151	49941	54540-43152	49941	54820-02000	51209
54830-M2000	51201	54830-1C000	59351	54830-1C000	59351HPS
54830-17010	49250HPS	54830-17020	49251HPS	54830-2B000	51226
54830-2C000	59365	54830-2H000	51241	54830-2H001	51241
54830-2H100	51241	54830-25000	49252	54830-25010	49250HPS
54830-25020	49251HPS	54830-26000	51205HPS	54830-29000	49253
54830-29500	49253	54830-3A000	51203	54830-34000	59551
54830-34500	59551	54830-36000	59552HPS	54830-36100	59552HPS
54830-36101	59552HPS	54830-37010	59204	54830-38100	59583
54830-38110	59583	54830-39000	59583	54830-4A000	59578
54830-4A002	59578	548304-A003	59578	54840-M2000	51202
54840-1C000	59355	54840-1C000	59355HPS	54840-2B000	51227
54840-2C000	59366	54840-26000	51206HPS	54840-3A000	51204
55210-38000	51215	55530-1H000	51242	55530-26600	51208
55530-29000	49254	55530-29000	49254HPS	55530-29500	49254
55530-29500	49254HPS	55530-38000	59582HPS	55530-38600	59584
55530-4A000	59579HPS	55530-4A001	59579HPS	55530-4A800	59579HPS
55530-4A801	59579HPS	55540-26600	51207	55541-28310	33510
55580-37020	59581	55830-25000	49252	56540-02000	59719
56540-2H000	51238	56540-24000	59574	56540-24001	59574
56540-25000	59572	56540-28020	59336	56820 4H000	51222
56820 4H100	51223	56820-02500	59203	56820-2H000	51236
56820-2H090	51237	56820-21000	19510	56820-21100	19510
56820-21110	19510	56820-21120	19510	56820-22000	19512
56820-25000	59586	56820-28000	19540	56820-28500	19512
56820-28520	19512	56820-31000	19510	56820-36000	49256
56850-28520	59202	56872-43000	59205	56872-43010	59205
577 242	59554	57705-56820	59205	57716-34000	59555
57724-2D000	59554	57724-2D020	59554	57724-3A000	59555
57724-38000	59556	57724-38010	59556	57729-4A000	51210
57730-24000	19515	57730-24100	59575	57730-28000	59339
57730-29000	59573	57730-29001	59573	57730-33100	59336
57730-43010	59571	57755-02000	59553	57755-22000	59570

Die aufgeführten Vergleichsnummern dienen nur zur besseren Identifikation.
References are only specified for a better identification.
Les références mentionées ne servent qu' á une meilleure identification.

HYUNDAI	MAPCO	HYUNDAI	MAPCO	HYUNDAI	MAPCO
57755-25000	59571				

ISUZU	MAPCO	ISUZU	MAPCO	ISUZU	MAPCO
8-94224-550-0	59290	8-94224-550-1	59290	8-94224-550-2	59290
8-94224-550-3	59290	8-94224-550-4	59290	8-94224-550-5	59290
8-94243-234-0	59290	8-94419-408-0	49743	8-94419-408-1	49743
8-94419-409-0	49742	8-94419-409-1	49742	8-94452-102-0	49745
8-94452-102-1	49745	8-94459453-2	49744	8-94459453-3	49744
8-94459453-4	49744	8-94459-464-1	49616	8-94459-464-2	49616
8-94459-465-1	49745	8-94459-465-2	49745	8-94459-480-0	49743
8-94459-480-1	49743	8-94459-480-2	49743	8-94459-481-0	49742
8-94459-481-1	49742	8-94459-481-2	49742	8-94472-255-0	59290
8-94472-255-2	59290	8-97018-125-2	51594HPS	8-97018-125-2	51594
8-97018-227-2	59849	8-97018-228-2	19811	8-97018-228-2	19811HPS
8-97020-953-0	49743	8-97020-953-1	49743	8-97020-954-0	49742
8-97020-954-1	49742	8-97020-954-2	49742	9445 94802	49743
9445 94810	49742				

IVECO	MAPCO	IVECO	MAPCO	IVECO	MAPCO
2992 593	19424	4253 4911	19423	93 800 662	19406
93 802 209	19407	93 802 242	19408	93 804 059	19406
93 804 060	19407	93 807 320	19408	93 807 545	19408
998 3325	19404				

JAGUAR	MAPCO	JAGUAR	MAPCO	JAGUAR	MAPCO
CAC9937	49649	CAC9938	49648	C12803	49649
C15890	49648	C2S 26883	19777	C2S 3248	19773HPS
C2S 39661	59645	C2S 396612	59673	C2S 39662	59644
C2S 47357	59672	C23024	49648	1S 7C 3280BB	59666
5X43 3B438 AA	19777				

JEEP	MAPCO	JEEP	MAPCO	JEEP	MAPCO
5200 3360	59933	5208 8437	59934	52087710	49932
52087711	49932	52088312	49933	52088520	49934
52088521	49935				

KIA	MAPCO	KIA	MAPCO	KIA	MAPCO
KB092-32-280	19580	KGA2A-34-150A	59591	KGA2A-341-70A	59590
KGA2C-28-170A	51231	KKY01-32-280	19580	KKY01-34-310	51531
KKY01-34-390A	51531	KK150-32-240	51533	KK150-32-240A	51533
K7103-22-40Y	51581	K7103-45-40YT	51540	K9A3-28-170A	59592
MB092-32-280	19580	OK011-32-270A	59230	OK011-34-160A	59345
OK2A1-28-150B	59343HPS	OK2A1-34-300B	51583	OK2A1-34-350B	51582
OK2A1-34-550A	59346	OK201-34-550C	59326	OK201-34-550E	59326
S083-99-324	51581	S083-99-354	51540	S083-99-356	51537
0G0303-45-50B	19587	0K0A3-28-170A	59592	0K011-34-510B	59337
0K2A1-34-150A	59594HPS	0K2A134150A	59594HPS	0K2A1-34-150B	59594HPS
0K2A1-34-550A	59346	0K2A5-34-150	59589	0K2A5-34-150A	59589
0K2A5-34-150B	59589	0K2A5-34-150C	59589	0K2FA-34-550	59346
0K2M2-28-150	59343HPS	0K2M2-28-150	59594HPS	0K2N1-34-150A	59341HPS
0K2N1-34-150A	59341	0K2N1-34-170A	59344HPS	0K2N1-34-170A	59344
0K201-32-280	49518	0K552-34-160B	51230	0K9A2-32-280	59342
51760-2G000	51239	54500-2H000	51232	54500-2H100	51232

Die aufgeführten Vergleichsnummern dienen nur zur besseren Identifikation.
References are only specified for a better identification.
Les références mentionées ne servent qu' á une meilleure identification.

KIA	MAPCO	KIA	MAPCO	KIA	MAPCO
54501-2H000	51233	54501-2H100	51233	54810-3E-000	51532
54830-38110	59583	55530-1H000	51242	56540-2H000	51238
56820-2H000	51236	56820-2H090	51237	57724-38010	59556
8AB1-32-280	19580				

LADA	MAPCO	LADA	MAPCO	LADA	MAPCO
2101 290 4063	19084	2101 290 4082	19084	2101 290 4185	19085
2101 290 4192	19085	2101 300 3050	19082	2101 300 3057	19080
2101 300 3064	19081	2108 290 4185	19091	2108 341 4056	19089
2108 341 4057	19090	2110 341 4056	19093	2110 341 4057	19092

LANCIA	MAPCO	LANCIA	MAPCO	LANCIA	MAPCO
0595 8244	19043	07 601 057	19054	07 601 062	19055
07 701 491	19068	07 750 977	19066	07 750 978	19067
07 777 240	19057	0763 3721	19043	09 946 948	19068
0994 1625	19022	0994 5562	19079	1306 003 080	19078
1306 003 080	19430	1308 664 080	19363	1313 083 080	19076
1313 083 080	19433	1313 084 080	19434	1313 084 080	19077
1313 084 080	19432	1316 735 080	19433	1316 735 080	19076
1316 736 080	19434	1316 736 080	19077	1316 736 080	19432
1317 425 080	19363	1331 209 080	19376HPS	4 402 644	19044
4 402 649	19044	46 402 681	19066	46 402 682	19067
46 407 372	19054	46 407 373	19055	46 423 822	19056
46 423 823	19057	46 430 002	19066	46 430 003	19067
4641 3122	19026HPS	4646 2049	49088	4647 6755	33005
4652 2142	49065	4652 5407	49064	50 705 464	49094
50 705 465	49095	50 705 544	49095	51 827 736	49094
51 827 737	49095	51 827 738	49095	5170 1045	19026HPS
595 8246	19047	6015 0360	19008	6080 9242	33009
6081 3377	19026HPS	7 591 215	19053	7 591 216	19052
7 601 261	19045	7 777 240	19057	75 851 37	19048
760 1065	33019	763 3721	19043	77 362 279	19492
77 362 380	49071	77 362 381	59010	77 362 502	49071
7736 2280	19493	82 461 062	19057	82 461 082	19057
8248 0099	49014	9 946 948	19068	9 946 949	19065
9 947 435	19052	9 947 436	19053	9 947 437	19052
9 947 438	19053	9404 059 080	19430	9404 059 080	19078
9566 950 880	19023	993 9557	19017	994 1625	19022
994 5562	19079	9947 926	49098	9948 296	59011

LAND ROVER	MAPCO	LAND ROVER	MAPCO	LAND ROVER	MAPCO
ANR 1799	59683	ANR 3304	59679	LR0 02609	51620
LR0 02610	51619	NRC 6007	59681	NRC4745	59680
NTC1886	59681	NTC1888	59678	QFK 500030	51692
QJB 100220	59685	QJB 500040	51689	QJB100230	59684
QJB500010	51684	QJB500050	51683	RBJ 000061	51687
RBJ 000062	51687	RBJ 102450	59688	RBJ 500710	51687
RBJ 500920	51687	RBJ102440	59689	RBJ102920	59689
RBJ102930	59688	RBK 000010	51688	RBK 000011	51688
RBK 000012	51688	RBK 500040	51685	RBK 500150	51688
RBK 500180	51685	RBK 500210	51688	RBK 500230	51685

Die aufgeführten Vergleichsnummern dienen nur zur besseren Identifikation.
References are only specified for a better identification.
Les références mentionées ne servent qu' á une meilleure identification.

LAND ROVER	MAPCO	LAND ROVER	MAPCO	LAND ROVER	MAPCO
RBK 500240	51685	RBK 500280	51685	RBK 500300	51685
RBM 000011	51686	RBM 500140	51694	RBM 500150	51693
RBM 500200	51686	RBM100170	59687	RBM100171	59687
RBM100172	59687	RBM100223	59697	RBM500190	51681
RBX101790	36962	RGD000311	51682	RGD000312	51682
RGD100682	59698	RHF000260	36690	RTC 5870	59680
RTC1800	59681	RTC5869	59681	TIQ000030	51683
575 882	59682				

MAZDA	MAPCO	MAZDA	MAPCO	MAZDA	MAPCO
BA01-34-300E	49581	BA01-34-350E	49580	BC1D-28-170A	19593HPS
BC1D-34-470	33535	BE7B-34-300A	49581	BE7B-34-350A	49580
BF62-32-240	19581	BF67-32-24X	19581	BF67-32-240	19581
BP4K 34 170D	59664HPS	BP4K-28-C10B	59646	BP4K-28-170C	51610
BP4K-28-170D	51610	BP4K-28-170E	51610	BP4K-28-300D	59647
BP4K-28-500C	59668	BP4K-28-500D	59647	BP4K-28-500E	59647
BP4K-34-170C	59664HPS	BP4K-34-300E	51331	BP4K-34-350E	51330
BP4L-32-240	51344	BP4L-32-280	51343	BP4L-32-290	51342
BR70-34-300B	49231	BR70-34-350B	49230	BTDA-34-550	49589
B001-34-550	19582	B01A-34-300	49581	B01A-34-350	49580
B01A-34-550	49589	B01A-34-550A	49589	B02B-34-300E	49581
B02B-34-350E	49580	B037-99-324	19580	B092-32-240	19581
B092-34-550	19582	B093-32-240	19581	B094-32-240	19581
B097 34 470A	33541	B21H-32-25X	59711	B21H-32-280	19583
B25D-32-240	59715	B25D-32-250	59714	B25D-34-300A	49585
B25D-34-300B	49585	B25D-34-300C	49585	B25D-34-300D	49585
B25D-34-350A	49584	B25D-34-350B	49584	B25D-34-350C	49584
B25D-34-350D	49584	B25D-34-460	33538	B25D-34-470	33539
B26R-28-170	49591HPS	B26R-34-170	49590HPS	B26R-34-170	49590
B30H-28-170B	51332HPS	B32H-34-300	51331	B32H-34-300A	51331
B32H-34-300D	51331	B32H-34-350	51330	B32H-34-350A	51330
B32H-34-350D	51330	B455-32-24X	19584	B455-32-25X	19594
B455-32-280	19583	B455-34-300	49231	B455-34-300E	49231
B455-34-350	49230	B455-34-350E	49230	B455-34-550	19585
B456-32-24X	59231	B456-32-25X	19594	B459-34-470	33533
B530-34-300A	49231	B530-34-350A	49230	C100-34-300B	59390
C100-34-350B	59389	C236-28-500A	59668	DD32-34-170	19774HPS
DD32-34-170	19774	DD32-34-300	59651	DD32-34-350	59650
DE90-32-240	59663	DE90-32-280	59670	DE90-32-290	59669
D001-32-24X	51533	D031-34-310A	51531	D031-34-320A	51531
EA01-28-170D	59534	EA03-34-170	19516	EA03-34-170A	19516
E016-32-25X	49586	E016-32-250	59232	GA2A-32-240	19599
GA2A-32-250	19599	GA2A-32-280A	19589	GA2A-32-280A	59350
GA2A-34-150	19591HPS	GA2A-34-150A	19591HPS	GA2A-34-170	19590HPS
GA2A-34-170A	19590HPS	GA2A-34-300	49583	GA2A-34-350	49582
GA2A-34-46XE	33531	GA2A-34-46YE	33530	GA2B-28-170A	19592HPS
GA2B-28-170B	19592HPS	GA2B-34-470A	33534	GA2C-28-170B	19592HPS
GA6B-E34-300	49583	GA6B-E34-350	49582	GA6B-34-300A	49583
GA6B-34-300E	49583	GA6B-34-350A	49582	GA6B-34-350E	49582
GA6B-99-356	19587	GA6B-99-356A	19587	GD7A-34-46X	33536

Die aufgeführten Vergleichsnummern dienen nur zur besseren Identifikation.
References are only specified for a better identification.
Les références mentionées ne servent qu' á une meilleure identification.

MAZDA	MAPCO	MAZDA	MAPCO	MAZDA	MAPCO
GD7A-34-46Y	33537	GE4T-128-170	59535HPS	GE4T-28-170	59535HPS
GE4T-32-240	59712	GE4T-32-240A	59712	GF22-34-300A	51539
GF22-34-350A	51538	GF22-34-350B	51538	GJ22-32-240	19588
GJ22-34-300A	51539	GJ22-34-300B	51539	GJ22-34-350A	51538
GJ22-34-350B	51538	GJ6A-28-C10A	59370	GJ6A-28-170	51336
GJ6A-28-170A	51336	GJ6A-28-170B	51336	GJ6A-30-170B	51336
GJ6A-34-J00B	59369	GJ6A-34-J00C	59369	GJ6A-34-J50B	59368
GJ6A-34-J50C	59368	GJ6A-34-150A	51335HPS	GJ6A-34-170A	51334HPS
GJ6A-34-200B	49234	GJ6A-34-250B	49235	GJ6A-34-300B	49233
GJ6E-32-280	51341	GJ6E-32-280A	51341	GJ6E-32-290	51340
GJ6E-32-290A	51340	GJ83-34-300A	51539	GJ83-34-300B	51539
GJ83-34-350A	51538	GJ83-34-350B	51538	GN98-34-350A	51538
G030-34-460C	33541	G030-99-356	19587	G26A-32-280	51341
G26A-32-290	51340	H001-99-324	19595	KKY01-34-310	51531
KKY01-34-390A	51531	LA01-32-115	59349	LB41-34-460	33540
LB82-34-300	49236	LB82-34-300C	49236	LC62-34-170	59388
LC62-34-170	59388HPS	LC62-34-170A	59388	LC62-34-170A	59388HPS
LC62-34-170B	59388	LC62-34-170B	59388HPS	LC62-34-300C	59395
LC62-34-350C	59394	LC62-34-550	19587	LX62-34-170	59388
LX62-34-170	59388HPS	M001-99-356A	19587	NA01-32-240	59713
NA01-34-170	49232	SO83-99-364	51540	S083-99-324	51581
S083-99-354	51540	S083-99-356	51537	T001-28-170A	51339HPS
T001-28-170B	51339HPS	T001-32-240A	59716	T001-32-240B	59716
T001-34-17XA	51337	T001-34-170A	51338	UB39-99-354	51534
UB39-99-356	51535	1E00-28-460B	33643	1E00-28-460C	33643
1E00-32-240	19644	1E00-32280A	19641	1E00-34-153A	33636
1E00-34-156	33628	1E00-34-156	33628/2	1E00-34-170	19604HPS
1E00-34300A	19643	1E00-34300B	19643	1E00-34300D	19643
1E00-34300E	19643	1E00-34300F	19643	1E00-34350A	19642
1E00-34350B	19642	1E00-34350D	19642	1E00-34350E	19642
1E00-34350F	19642	1E00-34-550	19763	1E01-32280A	19640
1E01-34-153A	33635	1E01-34-170	19604HPS	1E01-34-170A	59533
1E01-34-170A	19604HPS	1E01-34300A	19643/1	1E01-34300B	19643/1
1E01-34300D	19643/1	1E01-34300E	19643/1	1E01-34300F	19643/1
1E01-34350A	19642/1	1E01-34350B	19642/1	1E01-34350D	19642/1
1E01-34350E	19642/1	1E01-34350F	19642/1	8AB0-32-280	19583
8AB1-32-280	19580	8AB2-32-280	19583	8AG3-32-280	59350
8AG3-32-280	19589	8AG4-32-280	19589	8AH1-32-280	19595
8AL1-32-280	59338	8AS2-34-510A	51537	8AU1-34-540	51534
8AU2-34-510	51535	8AU3-34-510	51536		

MERCEDES-BENZ	MAPCO	MERCEDES-BENZ	MAPCO	MERCEDES-BENZ	MAPCO
A211 333 2814	36988	A211 333 2914	36988	A220 330 5711	51832
A90-610-551003	52810	Y638 330 0110	49839	000 320 0028	59898
000 320 0128	59898	000 330 1007	51882	000 330 5035	49847
000 338 0710	51850	000 338 0810	19836	000 338 1910	51850
000 338 2010	19836	000 338 4210	19823	000 338 4310	19824
000 338 4310	19827	000 338 4410	19823	000 338 4510	19827
000 338 4510	19824	000 338 4610	59897	000 338 4710	19846
000 338 4810	19848	000 338 4910	19826	000 338 5010	19836

Die aufgeführten Vergleichsnummern dienen nur zur besseren Identifikation.
References are only specified for a better identification.
Les références mentionées ne servent qu' á une meilleure identification.

MERCEDES-BENZ	MAPCO	MERCEDES-BENZ	MAPCO	MERCEDES-BENZ	MAPCO
000 338 5110	19846	000 338 5210	51850	000 338 5310	19848
000 338 5410	19848	000 338 5510	59897	000 338 5610	19847
000 338 5910	19849	000 338 6010	19827	000 338 6010	19824
000 338 6110	19823	000 338 6210	19824	000 338 6210	19827
000 338 6310	19826	000 460 2148	49847	000 460 2248	49848
000 460 4148	49847	000 460 4248	49848	000 460 4548	49847
000 460 4648	49848	000 460 8548	49847	000 460 8648	49848
001 330 4835	49882	001 330 4835	19742	001 330 5235	59866
001 330 5335	59867	001 330 6235	19833	001 330 6335	19834
001 330 6935	59866	001 330 7035	59867	001 330 7435	49800
001 330 7735	49800	1 330 6235	19833	1 330 6335	19834
1 330 7735	49800	115 463 0650	59831	116 330 0203	49899
116 333 0927	19844	116 460 0605	19838	116 460 0905	19838
123 330 0403	19829	123 330 0703	19829	123 330 1503	19829
123 330 1803	19829	123 330 4607	19842	123 330 4707	19843
123 330 5207	19842	123 330 5307	19843	123 338 0110	19840
123 338 0210	19841	123 460 0050	33972	123 460 0605	19838
123 460 0905	19838	123 460 1505	19838	123 460 1605	19829
123 586 0046	33972	123 586 0246	33972	124 320 0147	36908
124 320 0289	19839	124 320 0289	59847HPS	124 320 0447	33889/4
124 320 1947	36913	124 323 1785	33889/3	124 323 2385	33889/2
124 323 3785	33845	124 330 0275	33841/4	124 330 0575	33841/4
124 330 0803	19830/1	124 330 0903	19831/1	124 330 3007	49817
124 330 3107	49818	124 330 3407	49828	124 330 3507	49829
124 330 3807	49815	124 330 3907	49816	124 333 0127	19828
124 333 0327	19828	124 350 0129	19819	124 350 0153	19832
124 350 0341	33910	124 350 0575	33836	124 350 6408	33910
124 350 7006	19818	124 350 7006	19817	124 350 7106	19817
124 350 7106	19818	124 350 7606	19817	124 350 7706	19818
124 351 0242	33942	124 351 1342	36899	124 351 2242	36899
124 352 0267	36899	124 352 3465	33836	124 352 3565	33838
124 352 4165	33865	124 352 7065	36972	124 352 7765	33865
124 352 8465	36972	124 352 8665	33837	124 352 9065	33836
124 460 0019	33972	124 460 0050	33972	124 460 0150	33972
124 460 0805	19845	124 460 1205	49813	124 463 0066	59831
1244 601405	59800	126 330 0303	49898	126 330 0403	49899
126 330 0503	49898	126 330 0603	49899	126 330 0607	49896
126 330 0707	49897	126 333 3814	33970	126 460 0819	33972
126 463 0066	59831	129 330 0203	59865	129 350 0406	19817
129 350 0506	19818	140 320 0889	59845	140 320 1189	49826
140 320 1289	49827	140 320 1789	59856	140 320 3589	59845
140 330 0003	19837	140 330 2942	36919	140 330 3942	36919
140 330 4207	59836	140 330 4307	59837	140 330 5407	49819
140 330 5507	49820	140 330 5807	49819	140 330 5907	49820
140 330 6007	33867	140 330 6307	33867	140 330 6407	59836
140 330 6507	59837	140 330 7007	59836	140 330 7107	59837
140 330 7607	49819	140 330 7707	49820	140 330 8207	33867
140 333 0327	49891	140 333 1714	36980	140 333 1814	33971
140 333 1814 26	33971	140 350 1853	49893	140 350 2453	49893

Die aufgeführten Vergleichsnummern dienen nur zur besseren Identifikation.
References are only specified for a better identification.
Les références mentionées ne servent qu' á une meilleure identification.

MERCEDES-BENZ	MAPCO	MERCEDES-BENZ	MAPCO	MERCEDES-BENZ	MAPCO
140 350 3053	49893	140 350 3406	49888	140 350 3506	49889
140 350 3606	49890	140 350 8708	36920	140 351 7142	36921
140 351 8142	36922	140 352 4465	37833	140 352 4565	37832
140 352 4765	37833	140 352 4865	37832	140 352 8065	36923
140 352 8665	36923	140 460 0805	49892	140 460 0819	33922
163 320 0090	51845	163 320 0190	51844	163 330 0003	59873
163 330 0035	59832	163 330 0103	59872	163 330 0135	59832
163 330 0175	37834	163 330 0203	59872	163 330 0203	59873
163 330 0403	59873	163 333 0001	51854	163 333 0101	51855
163 338 0015	59872	163 338 0115	59873	163 338 0215	59899
163 350 0013	59838	163 350 0113	59838	163 352 0001	51842
163 352 0101	51843	163 352 0401	51842	163 352 0501	51843
168 320 0389	49834HPS	168 320 0589	49834HPS	168 320 0789	49834HPS
168 320 1089	49834HPS	168 320 1189	49834HPS	168 330 0807	49814/1
168 330 0827	49814/1	168 330 0907	49814/2	168 330 0927	49814/2
168 330 1107	49814/1	168 330 1135	49823	168 330 1207	49814/2
168 330 1235	49824	168 330 1335	49894	168 330 1535	49823
168 330 1635	49824	168 330 1707	49814/1	168 330 1807	49814/2
168 330 2307	49814/1	168 330 2407	49814/2	168 333 0127	49825
168 333 0227	49825	168 333 0614	33943	168 333 0714	33944
168 981 0318	59846	168 981 0518	59846	168 981 0518S1	59846
169 320 0989	52806HPS	169 333 0027	51848	169 333 0127	51848
170 330 0075	36917	170 330 0107	49821	170 330 0207	49822
180 330 1048	19836	201 320 0047	33868	201 320 0447	33889/4
201 330 0703	19822	201 330 1203	19825	201 330 1503	19822
201 330 1603	19825	201 330 3807	49815	201 330 3907	49816
201 333 4514	33936	201 333 5114	33841	201 350 1953	19832
201 350 2753	19832	201 350 2953	19832	201 350 3253	19832
201 350 4706	19820	201 350 5606	19820	201 351 2742	36924
201 352 0027	59864	201 352 0027	33870	201 352 3665	33874
201 352 8765	33973	201 352 8865	33973	201 460 1405	19821
201 460 1505	19821	202 330 0075	36916	202 330 2007	49804
202 330 2607	49821	202 330 2707	49822	202 330 3007	49803
202 330 3107	49804	202 330 3607	49803	202 330 4107	49821
202 330 4207	49822	202 330 4807	49803	202 330 4907	49804
202 333 0027	49802	202 333 6214	33976	202 333 6414	36911
202 333 6714	36912	202 333 7714	33977	202 350 3408	36971
202 351 0842	33978	202 352 0065	36972	202 352 0165	36972
202 460 0219	59869	202 460 0319	33974	202 460 0405	49801
202 460 0505	59862	203 320 0489	49895HPS	203 320 0489	49895
203 320 0789	59859	203 320 0889	59860	203 320 1889	59861HPS
203 320 1889	59861	203 320 2189	59857	203 320 2189	59857HPS
203 320 2589	49895	203 320 2589	49895HPS	203 320 2689	59857HPS
203 320 2689	59857	203 320 2889	49895	203 320 2889	49895HPS
203 320 2989	59857	203 320 2989	59857HPS	203 330 0111	59885
203 330 0211	59884	203 330 1611	59884	203 330 1711	59885
203 330 1903	59840	203 330 1911	59881	203 330 2003	59841
203 330 2011	59882	203 330 2303	59840	203 330 2403	59841
203 330 3311	59881	203 330 3411	59882	203 330 3511	59885

Die aufgeführten Vergleichsnummern dienen nur zur besseren Identifikation.
References are only specified for a better identification.
Les références mentionées ne servent qu' á une meilleure identification.

MERCEDES-BENZ	MAPCO	MERCEDES-BENZ	MAPCO	MERCEDES-BENZ	MAPCO
203 330 3611	59884	203 330 3903	59840	203 330 3911	59885
203 330 4003	59841	203 330 4011	59884	203 333 0214	36987
203 333 1014	36987	203 350 0353	51851	203 350 0753	51851
204 330 1911	59881	204 330 2011	59882	208 330 0507	49804
208 330 1307	49803	208 330 1407	49804	210 320 2189	49812HPS
210 320 2289	49811HPS	210 320 3689	49812HPS	210 320 3789	49811HPS
210 330 0035	49802	210 330 0175	36909	210 330 0427	49802
210 330 0475	36909	210 330 2207	49803	210 330 2307	49804
210 330 2507	49803	210 330 2607	49804	210 330 3407	49808
210 330 3507	49809	210 330 4507	49809	210 330 5007	49803
210 330 5107	49804	210 330 6107	49808	210 330 6207	49809
210 330 7607	49808	210 330 7707	49809	210 330 8707	49803
210 330 8807	49804	210 330 9007	49808	210 330 9107	49809
210 333 5514	33979	210 333 6814	36910	210 338 0415	49807
210 338 0515	49805	210 338 0615	49806	210 350 0029	19819
210 350 0653	19832	210 350 0953	19832	210 350 1453	19832
210 350 1606	19817	210 350 1706	19818	210 350 1853	19832
210 350 2153	19832	210 350 2406	19817	210 350 2406	19818
210 350 2506	19817	210 350 2506	19818	210 350 3306	19820
210 350 3406	19817	210 350 3406	19818	210 350 3806	59830/1
210 350 3806	19819	210 350 3806 S1	59830/1	210 350 5808	36973
210 351 0842	36796	210 352 0665	37832	210 352 0965	33837
211 320 0889	59858HPS	211 320 0989	59833	211 320 1089	59834
211 320 3389	59858HPS	211 323 0068	51847	211 330 0103	51840
211 330 0203	51841	211 330 0335	49802	211 330 1111	51835
211 330 1211	51836	211 330 1511	51835	211 330 1611	51836
211 330 2303	51840	211 330 2403	51841	211 330 2503	51840
211 330 2603	51841	211 330 2911	51835	211 330 3011	51836
211 330 4307	51852	211 330 4407	51853	211 330 4411	51836
211 330 6707	51852	211 330 6807	51853	211 330 8107	51837
211 330 8207	51838	211 330 8907	51852	211 330 9007	51853
211 330 9107	51837	211 330 9207	51838	211 330 9907	51882
211 331 0083	51882	211 333 1014	36988	211 333 1114	33883
211 333 2514	36988	211 333 2814	36988	211 333 2914	36988
211 338 0015	51839	211 352 0865	36989	220 320 3689	59845
220 323 0368	51847	220 330 1407	51830	220 330 1507	51831
220 330 4311	51832	220 330 4411	51833	220 330 5811	51833
220 330 8307	51830	220 330 8407	51831	220 330 8907	59879
220 330 9007	59880	220 330 9307	51830	220 330 9407	51831
220 333 0127	51834	220 333 0227	51834	220 333 0727	51834
220 333 1814	36832	220 338 0203	59843	220 338 0515	59843
220 338 0715	59844	220 338 1015	59843	220 350 0453	59874
220 350 2206	59876	220 350 2406	59877	220 350 2606	59878
220 350 2706	59878	220 352 0027	59864	220 352 0227	33870
220 352 0227	59864	221 330 2311	51880	221 330 2411	51881
221 333 0814	37835	221 350 0206	51860/1	221 350 1006	51860
230 330 0203	59843	230 330 1711	51835	230 330 1811	51836
230 333 0314	36833	230 338 0015	59844	230 338 0115	59843
230 350 2706	51856	230 350 2806	51857	230 350 3506	51858

Die aufgeführten Vergleichsnummern dienen nur zur besseren Identifikation.
References are only specified for a better identification.
Les références mentionées ne servent qu' á une meilleure identification.

MERCEDES-BENZ	MAPCO	MERCEDES-BENZ	MAPCO	MERCEDES-BENZ	MAPCO
230 350 3606	51859	230 352 0027	33870	230 352 0027	59864
230 352 1465	37831	230 352 1565	36838	230 352 1665	37830
240 460 0419	33922	251 330 0707	52807	251 330 0807	52808
309 406 1605	49844	309 460 0805	49844	309 460 1305	49844
309 460 2905	49844	309 460 3105	49844	310 330 1335	49847
338 5210	51850	338 5310	19848	338 5410	19848
338 5510	59897	338 5610	19847	338 5910	19849
338 6010	19824	338 6110	19823	338 6310	19826
460 330 1235	49882	460 330 1235	19742	460 330 1335	49882
460 8748	49848	601 321 0350	33946	601 324 0050	36925
601 324 0150	36925	601 460 0005	49844	601 460 0105	49844
601 460 0905	49845	601 460 1005	49845	601 460 1105	49845
601 460 1205	49845	601 460 1305	49845	601 460 1405	49845
601 460 1505	49845	602 324 0050	36925	602 324 0150	36925
602 326 0282	36926	602 330 0003	49846	602 330 0103	49846
602 330 0303	49846	602 330 0403	49846	602 330 5435	49880
602 330 5535	49849	602 330 5735	49880	602 330 5835	49849
602 330 5935	49880	602 330 6035	49849	602 624 0150	36925
608 320 0028	59898	608 320 0128	59898	608 330 5535	49880
631 320 0028	59898	631 320 0228	59898	631 330 0310	49884
631 330 0410	49883	631 330 0435	49881	631 330 0503	49886
631 330 0703	49886	631 338 0310	49884	631 338 0410	49883
631 338 0510	49882	638 323 0268	49841HPS	638 323 0285	37837
638 323 0368	49840HPS	638 323 0468	52800	638 323 0568	52801
638 326 0016	49843	638 326 0116	49843	638 330 0010	59801
638 330 0027	49839	638 330 0110	59802	638 333 0027	49839
638 333 0814	37836	638 460 0048	49836	638 460 0055	49837
638 460 0205	49838	638 460 0255	49837	639 320 0089	52804HPS
639 320 0189	52805HPS	639 320 0289	52804HPS	639 320 0389	52805HPS
639 320 0489	52804HPS	639 320 0589	52805HPS	680-137-20AA	52814
680-137-21AA	52813	901 320 0289	59854	901 320 0389	59855
901 323 0285	36947	901 326 0081	37838	901 333 0627	49831
901 333 0727	49831	901 333 1027	49831	901 333 1127	49831
901 333 1227	49831	901 460 0048	49830	901 460 0148	49830
901 460 0155	49833	901 460 0255	49833	901 460 0348	49830
901 460 0455	49833	904 323 0085	33947	905 320 0489	52802
905 320 0589	52803	906 320 1389	52815	906 320 1789	52813
906 330 4007	52816	906 330 4107	52817	906 460 0048	52809
906 460 0148	52809	906-105-51003	52810	906-320-1889	52814
906-460-0055	52810	906-460-0055	52811		

MINI	MAPCO	MINI	MAPCO	MINI	MAPCO
31 12 6 753 991	51661	31 12 6 753 992	51662	31 12 6 756 309	51660
3135 1507 989	59695	3135 6759 537	59614HPS	3211 6754 563	59692
3211 6754 564	59693	3221 6754 565	59690	3221 6754 566	59691
3355 1507 999	59694				

MITSUBISHI	MAPCO	MITSUBISHI	MAPCO	MITSUBISHI	MAPCO
MA159984	59221	MA169614	59221	MB 809355	59309
MB001699	19542	MB001715	19542	MB002475	59223

Die aufgeführten Vergleichsnummern dienen nur zur besseren Identifikation.
References are only specified for a better identification.
Les références mentionées ne servent qu' á une meilleure identification.

MITSUBISHI	MAPCO	MITSUBISHI	MAPCO	MITSUBISHI	MAPCO
MB002476	59223	MB006359	49249	MB076003	59220
MB076532	49249	MB109585	59223	MB109587	59224
MB109588	59224	MB112476	59223	MB122011	59222
MB122012	59222	MB122477	59223	MB122781	59221
MB122782	59221	MB130982	33552	MB166426	19510
MB166427	49249	MB166980	59220	MB166982	59221
MB175544	59224	MB176308	19552	MB176309	19551
MB192430	49256	MB241155	19551	MB241156	19551
MB241171	19546	MB241206	19545	MB241423	59304
MB241818	59224	MB241883	49578	MB241974	51598
MB267877	51543	MB303375	49578	MB315629	19510
MB315775	19546	MB315776	19545	MB347599	59310
MB347666	19541	MB349475	19551	MB349575	19551
MB378701	59220	MB378704	59221	MB430 112	49940
MB430113	49941	MB518283	59539	MB518780	59540HPS
MB518806	59356	MB518807	59357	MB518892	59542
MB518892	19543HPS	MB527157-01	59539	MB527161-01	59539
MB527169	19547	MB527169	19540	MB527228	59303
MB527349	49247	MB527350	49247	MB527383	49940
MB527383-01	49248	MB527384	49941	MB527384-01	49248
MB527511-01	59539	MB527512-01	59539	MB527650	59310
MB532046	19541	MB532971	59306	MB553249	19550
MB564855	59373	MB564991	49256	MB573043	19543HPS
MB584021	49240	MB598023	19547	MB598023	19540
MB633820	33553	MB633926	51549	MB672370	59510
MB672370	59510HPS	MB808076	59511HPS	MB808909	33551
MB808910	33550	MB809220	59397	MB809221	59396
MB809222	51550	MB809223	51551	MB809354	19544
MB83037	19554	MB831035	49546	MB831036	49547
MB831038	19555	MB831040	59340	MB831042	59305
MB831043	19549	MB831044	19548	MB831559	51240
MB860408-01	59539	MB860829	19553	MB860830	19553
MB864164	59310	MB891788	49541	MB892981	59541HPS
MB892982	19543HPS	MB907115	49540	MB907116	49541
MB907163	49540	MB907164	49541	MB910934	59308
MB910961	59308	MB912076	19540	MB912076	19547
MB912077	49540	MB912078	49541	MB912505	49243
MB912506	49244	MB912510	49242	MB912511	59398
MB912512	59399	MB912519	49256	MB949343	59307
MB981787	49540	MR112394	59545HPS	MR124879	49546
MR124880	49547	MR130807	59308	MR130982	33552
MR131680	49905HPS	MR131732	59543HPS	MR132551	59546
MR132552	59547	MR162579	49242	MR162580	49241
MR179479	49544	MR179479	49907	MR179480	49545
MR179480	49908	MR241341	49542	MR241342	49543
MR244901	59536	MR267873	59544	MR267875	59545HPS
MR267876	59546	MR267877	59547	MR272116	49905HPS
MR272117	49245	MR272118	49909	MR296093	49546
MR296094	49547	MR296095	49546	MR296096	49547

Die aufgeführten Vergleichsnummern dienen nur zur besseren Identifikation.
References are only specified for a better identification.
Les références mentionées ne servent qu' á une meilleure identification.

MITSUBISHI	MAPCO	MITSUBISHI	MAPCO	MITSUBISHI	MAPCO
MR296269	19554	MR296270	19555	MR296295	49241
MR296296	49242	MR297969	59536	MR297969	59308
MR316368	49250HPS	MR316369	49251HPS	MR316435	59537
MR316435	59537HPS	MR316436	59538HPS	MR316436	59538
MR325576	49241	MR325577	49242	MR333166	59307
MR374521	51543	MR374522	51544	MR403419	59283
MR403420	59284	MR403872	59307	MR418052	51545HPS
MR418053	51546	MR439701	49542	MR439702	49543
MR476457	19547	MR491345	59397	MR491346	59396
MR491347	51550	MR491348	51551	MR594674	59307
MR915769	49907	MR915769	49544	MR915770	49545
MR915770	49908	MR954888	51598	4056A034	59537HPS
4056A035	59538HPS	546180F000	49226HPS		

NISSAN	MAPCO	NISSAN	MAPCO	NISSAN	MAPCO
40100-G5110	19537	40110-B9500	19535	40110-G3700	19537
40110-G5100	19537	40110-G5110	19537	40110-T3060	19535
40110-T6000	19535	40110-T6025	19535	40110-00QAA	49156
40110-00QAB	49156	40110-01G25	19535	40110-01G26	19535
40160-AX000	51283	40160-A03G0	59325	40160-A06G0	59325
40160-F4200	59522	40160-G2525	59523	40160-G4010	59523
40160-G5100	59523	40160-G5400	59523	40160-Y02G0	59522
40160-0F000	59520	40160-0M010	59522	40160-0M020	59522
40160-00QAB	49110	40160-000AC	49111	40160-000AD	49111
40160-00001	59522	40160-01A00	59325	40160-01A25	59325
40160-01B25	59521	40160-01E00	59521	40160-01G00	19536
40160-01G25	19536	40160-01G50	19536	40160-01G90	19536
40160-01N25	19536	40160-4F100	19526	40160-50A00	19524
40160-50J25	19524	40160-50W00	59520	40160-50W01	59520
40160-50W25	59520	40160-50Y0R	59522	40160-50Y00	59522
40160-50Y02	59522	40160-50Y10	59522	40160-50Y20	59522
40160-51E00	59521	40160-52Y00	19522	40160-52Y00	59522
40160-52Y10	59522	40160-52Y20	59522	40160-52Y60	59522
40160-60Y10	59522	40160-60Y20	19522	40160-60Y20	19521
40160-60Y20	59522	40160-60Y60	19524	40160-69C00	19524
40160-69Y00	19522	40160-69Y10	59522	40160-70J00	19524
40160-85E00	59521	40160-86M00	19524	40160-9C500	59599
40160-93G25	59520	40160-93G26	59520	40161-50W01	59520
40161-52Y10	59522	40161-9C500	59598	40161-93G26	59520
45261-90J11	49524	46630-60B00	51593	48510-50Y25	49532
48520-D0100	59257	48520-D0125	59257	48520-D0126	59257
48520-OM025	19528	48520-Q9000	19520	48520-0M025	19520
48520-0M025	19528	48520-0M085	59524	48520-0M085	59225
48520-00QAH	49137	48520-00QAJ	49138	48520-00QAK	49143
48520-00QAL	49144	48520-00QAM	49155	48520-00QAN	49135
48520-00QAP	49136	48520-01B25	19556	48520-01E00	19520
48520-01E25	19520	48520-01E26	19520	48520-01E26	59255
48520-01G25	59254	48520-01N25	59228	48520-01W00	59254
48520-02E00	19520	48520-02E25	19520	48520-15U25	59225
48520-15U26	59225	48520-17B25	19556	48520-31G25	19534

Die aufgeführten Vergleichsnummern dienen nur zur besseren Identifikation.
References are only specified for a better identification.
Les références mentionées ne servent qu' á une meilleure identification.

NISSAN	MAPCO	NISSAN	MAPCO	NISSAN	MAPCO
48520-35F25	59257	48520-4F125	19525	48520-41W00	59254
48520-50A00	59255	48520-50A26	59255	48520-50Y25	19520
48520-50Y25	59257	48520-6F625	19525	48520-61G25	59254
48520-61G25	59526	48520-7F000	19534	48520-71L25	59524
48520-71L25	59225	48520-73J25	19523	48520-73J35	19523
48520-88E25	59256	48520-88E26	59256	48520-9C025	19523
48521-G5101	59527	48521-G5125	59527	48521-0C005	59525
48521-0C025	59525	48521-00QAA	19195	48521-00QAF	49125
48521-00QAG	49117/1	48521-00QAG	51117/1	48521-01G25	59258
48521-01N25	59227	48521-01W00	59259	48521-1M210	59253
48521-1M226	59360	48521-1M226	59253	48521-31G25	19533
48521-40D25	59525	48521-40U01	59525	48521-40U25	59525
48521-40U26	59525	48521-40U27	59525	48521-40426	59525
48521-50Y00	19521	48521-50Y25	59259	48521-50400	19521
48521-72E06	19530	48570-31G25	19533	48570-61G25	59528
48640-01N25	59227	48641-G5101	59229	48641-G5125	59229
48641-01N25	59228	52525-2F010	49526	54423-00QAA	36705
54476-41B02	33501	54479-41B02	33501	54500-AV60A	51530
54500-AV600	51530	54500-AV606	51530	54500-AX600	59359
54500-BM410	51528	54500-BN300	51528	54500-0M010	49529
54500-0M020	49529	54500-0M060	49529	54500-0M202	49529
54500-00QAH	19197	54500-00Q0M	19197	54500-00Q1A	19197
54500-2F500	49535	54500-2U711	49537	54500-2Y411	51287
54500-2Y412	51287	54500-2Y470	51287	54500-21B00	49539
54500-39U01	49221	54500-4B235	49221	54500-4F102	49521
54500-4F105	49521	54500-4F150	49521	54500-4M400	51528
54500-4M410	51528	54500-4M411	51528	54500-41U00	49221
54500-41U01	49221	54500-44B00	49521	54500-5M300	51528
54500-5Y720	51287	54500-50A00	59322	54500-52Y10	49531
54500-52Y15	49531	54500-52Y60	49531	54500-52Y70	49531
54500-6F600	49537	54500-69Y10	49531	54500-70A00	59322
54500-8H31A	51285	54500-8H310	51285	54500-86J00	49523
54501-AV60A	51529	54501-AV600	51529	54501-AV606	51529
54501-AX600	59358	54501-BC42A	59358	54501-BM410	51527
54501-BN300	51527	54501-0M010	49528	54501-0M020	49528
54501-0M060	49528	54501-00QAH	19109	54501-00QAH	19196
54501-00Q0G	19196	54501-00Q0L	19196	54501-2F500	49534
54501-2U711	49536	54501-2Y411	51286	54501-2Y412	51286
54501-21B00	49538	54501-39U01	49220	54501-4F102	49520
54501-4F105	49520	54501-4F150	49520	54501-4M400	51527
54501-4M410	51527	54501-4M411	51527	54501-41U00	49220
54501-41U01	49220	54501-44B00	49520	54501-5M300	51527
54501-5Y720	51286	54501-50A00	59321	54501-52Y10	49530
54501-52Y15	49530	54501-52Y60	49530	54501-52Y70	49530
54501-6F600	49536	54501-69Y10	49530	54501-8H31A	51284
54501-8H310	51284	54501-86J00	49522	54502-00QAA	49142
54502-00QAA	33122	54502-00QAA	49140	54502-00QAB	49142
54503-00QAA	49141	54503-00QAA	49140	54503-00QAA	33122
54503-00QAB	49141	54524-2F010	49527	54524-2J001	49527

Die aufgeführten Vergleichsnummern dienen nur zur besseren Identifikation.
References are only specified for a better identification.
Les références mentionées ne servent qu' á une meilleure identification.

NISSAN	MAPCO	NISSAN	MAPCO	NISSAN	MAPCO
54524-2010	49527	54524-50J00	49527	54524-86J10	49527
54525-2F010	49526	54525-2J001	49526	54525-2010	49526
54525-50J00	49526	54525-86J10	49526	54541-90J02	33504
54545-90J00	33505	54560-00QAB	33165	54560-00Q0A	33165
54560-17B01	33502	54560-50A00	33507	54570-00QAA	36704
54570-50J00	33503	54570-50Y11	33506	54570-50Y11	33500
54590-01E00	33511	54590-85E00	33511	54616-00QAA	33164
54616-00QAC	49118	54616-00QAC	49118HPS	54616-00Q0C	49109HPS
54618-AX600	19120HPS	54618-BC40A	19120HPS	54618-BU70A	51282
54618-D5010	49525HPS	54618-VB000	49229	54618-0E000	49222HPS
54618-0F000	49226HPS	54618-0W000	49224HPS	54618-0W001	49224HPS
54618-0W001	49224	54618-00QAA	49108HPS	54618-00QAB	49109HPS
54618-00Q0C	49108HPS	54618-2F010	19529HPS	54618-2Y00A	19539
54618-2Y000	19539	54618-3W400	49224HPS	54618-4M400	59226HPS
54618-4U000	51282	54618-47B0A	49228	54618-47B00	49228
54618-47B01	49228	54618-50Y00	49525HPS	54618-54Y10	59851
54618-58Y10	59851	54618-58Y20	59851	54618-58Y21	59851
54618-58Y60	59851	54618-8H300	51521	54618-86J00	19529HPS
54618-86J25	19529HPS	54618-9C000	59250	54618-9C002	59251
54618-90J11	19529HPS	54630-28B00	49228	54668-BU70A	51281
54668-2Y00A	19538	54668-2Y000	19538	54668-4U000	51281
54668-8H300	51520	54668-9C000	59250	56260-VB010	51522
56260-0F001	49227HPS	56260-0W001	49223	56260-0W001	49223HPS
56260-01J10	51526	56260-41G11	49223HPS	56260-41G11	49223
56260-51E15	49219	56261-AV611	51525HPS	56261-EQ000	49524
56261-0E000	51525HPS	56261-4F702	19527HPS	56261-4F725	19527HPS
56261-50J00	49524	56261-6F600	19527HPS	56261-86J00	49524
56261-86J25	49524	56261-90J01	49524	56620-VB010	51522
82007-39495	19197	82009-42417	19196		

OPEL	MAPCO	OPEL	MAPCO	OPEL	MAPCO
0310 821	49744	0322 078	19805	0322 079	49752
0322 080	49753	0322 125	59295	0322 126	59296
0322 140	49760	0322 142	19803/1	0322 143	19804/1
0322 146	49753	0322 146	49750	0322 147	49751
0322 147	49752	0322 148	49760	0322 149	19805
0322 150	19613	0322 151	49600	0322 151	19615
0322 152	19614	0322 154	19616	0322 154	49601
0322 155	49754	0322 158	49755	0322 159	19812
0322 160	19813	0322 168	19813	0322 169	19812
0322 171	19615	0322 171	49600	0322 172	49601
0322 172	19616	0322 173	19803/1	0322 174	19804/1
0322 175	19613	0322 176	19614	0322 177	19615
0322 177	49600	0322 178	49601	0322 178	19616
0322 179	49758	0322 180	49759	0322 575	59367
0322 576	49604	0322 577	49604	0324 038	19719
0324 039	19718	0324 042	19800	0324 050	19800
0324 053	19610	0324 054	19611	0324 055	19610
0324 056	19611	0324 057	49743	0324 058	49742
0324 059	49758	0324 060	49759	0324 061	19615

Die aufgeführten Vergleichsnummern dienen nur zur besseren Identifikation.
References are only specified for a better identification.
Les références mentionées ne servent qu' á une meilleure identification.

OPEL	MAPCO	OPEL	MAPCO	OPEL	MAPCO
0324 061	49600	0324 062	19616	0324 062	49601
0324 063	19626	0324 066	19631	0324 186	19628
035 2349	33752	0350 078	33729	0350 116	33730
0350 123	33729	0350 127	33735	0350 130	33789
0350 138	33761	0350 147	33791	0350 260	33726
0350 261	33727	0350 263	19607/8HPS	0350 263	19607
0350 600	19606HPS	0350 603	49749HPS	0350 609	19606HPS
0350 610	19600HPS	0350 611	19639	0350 614	19639
0350 616	59026HPS	0352 002	19809	0352 003	19808
0352 028	19630	0352 029	19629	0352 030	19623
0352 041	49608	0352 042	49609	0352 043	19806
0352 044	19807	0352 051	49623	0352 052	49624
0352 061	49608	0352 063	49609	0352 065	49609
0352 087	49092	0352 123	49756	0352 124	49757
0352 132	19624	0352 135	19624	0352 144	19620
0352 147	49756	0352 148	49757	0352 169	49756
0352 172	49757	0352 181	19808	0352 182	19809
0352 193	19619	0352 196	19630	0352 197	19629
0352 300	33725	0352 301	33733	0352 302	33849
0352 303	33848	0352 309	33768	0352 310	33796
0352 319	36703	0352 320	33796	0352 327	33793
0352 334	33752	0352 335	33757	0352 341	33716
0352 342	33715	0352 343	33715	0352 346	33725
0352 347	33714	0352 348	33714	0352 352	33714
0352 355	33715	0352 356	33714/2	0352 356	33714
0352 357	33732	0352 358	33731	0352 365	33794
0352 457	33848	0352 458	33849	0352 800	19621
0352 803	49610	0352 821	19816	0352 822	19816
0352 823	19816	0352 826	19617	0352 827	19618
0352 828	49745	0352 829	19621	0353 460	33714/9
0353 560	33795	0353 561	33734	0402 642	33785
0402 643	33737	0402 645	33786	0402 649	33766
0402 935	33879	0402 942	33753	0423 121	33877
0423 302	33720	0423 313	33787	0423 315	33895
0423 316	33736	0423 318	33720	0444 153	33739
0444 199	33739	0444 200	33792	07 840 452	19800
08 946 791	33717	0910 9910	49156	0916 0390	49156
0916 0394	36704	09160395	36705	0920 373	49743
0920 374	49742	1 603 120	19714	1 603 164	19714
1 603 215	19638	1325 8052	49777	1603 008	19810
1603 009	19800	1603 121	19612	1603 121	19802
1603 128	19801	1603 161	19801	1603 163	19612
1603 163	19802	1603 167	19612	1603 167	19802
1603 187	19801	1603 198	19628	1603 199	19627
1603 202	19632	1603 213	49607	1603 214	19638
1603 214	19637	1603 215	19637	1603 216	49607
1603 227	49620	1603 228	49621	1603 229	49622
1603 256	49607	1603 257	49619	1603 258	49618
1603 266	49618	1603 267	49619	1603 415	49622

Die aufgeführten Vergleichsnummern dienen nur zur besseren Identifikation.
References are only specified for a better identification.
Les références mentionées ne servent qu' á une meilleure identification.

OPEL	MAPCO	OPEL	MAPCO	OPEL	MAPCO
1603 455	19631	1603 544	59012	1603 545	59013
1603 644	51302	1603 845	19810	1609 457	59012
1609 458	59013	24 428 980	33768	260 30 411	49754
260 32 284	49755	3 506 18	49777	310 821	49744
322 078	19805	322 079	49752	322 080	49753
322 125	59295	322 126	59296	322 139	49760
322 140	49760	322 142	19803/1	322 143	19804/1
322 146	49750	322 146	49751	322 146	49753
322 147	49752	322 147	49750	322 147	49751
322 148	49760	322 149	19805	322 150	19613
322 151	19615	322 152	19614	322 154	19616
322 155	49754	322 158	49755	322 159	19812
322 160	19813	322 168	19813	322 169	19812
322 171	49600	322 171	19615	322 172	19616
322 172	49601	322 173	19803/1	322 174	19804/1
322 175	19613	322 176	19614	322 177	49600
322 178	49601	322 178	19616	322 179	49758
322 180	49759	322 575	59367	322 576	49604
322 577	49604	324 036	19710	324 037	19711
324 038	19719	324 039	19718	324 042	19800
324 048	19613	324 049	19614	324 050	19800
324 053	19610	324 054	19611	324 055	19610
324 056	19611	324 057	49743	324 058	49742
324 059	49758	324 060	49759	324 061	49600
324 062	49601	324 063	19626	324 066	19631
350 078	33729	350 081	33755	350 109	33740
350 116	33730	350 122	33755	350 123	33729
350 125	33760	350 127	33735	350 130	33789
350 138	33761	350 147	33791	350 161	36764
350 260	33726	350 261	33727	350 263	19607/8HPS
350 263	19607	350 605	19602HPS	350 607	19811
350 607	19811HPS	350 608	59849	350 610	19600HPS
350 611	19639	350 614	19639	350 615	49749HPS
350 616	59026HPS	352 002	19809	352 003	19808
352 007	19629	352 008	19630	352 011	19635
352 012	19636	352 028	19630	352 029	19629
352 030	19623	352 041	49608	352 042	49609
352 043	19806	352 044	19807	352 045	49608
352 051	49624	352 051	49623	352 052	49623
352 052	49624	352 061	49608	352 063	49609
352 067	49092	352 076	19620	352 077	19619
352 087	49092	352 123	49756	352 124	49757
352 135	19624	352 147	49756	352 148	49757
352 169	49756	352 172	49757	352 192	19620
352 196	19630	352 197	19629	352 300	33725
352 301	33733	352 302	33849	352 303	33848
352 309	33768	352 310	33796	352 319	36703
352 320	33796	352 323	33788	352 327	33793
352 334	33752	352 335	33757	352 341	33716

Die aufgeführten Vergleichsnummern dienen nur zur besseren Identifikation.
References are only specified for a better identification.
Les références mentionées ne servent qu' á une meilleure identification.

OPEL	MAPCO	OPEL	MAPCO	OPEL	MAPCO
352 342	33715	352 343	33715	352 346	33725
352 348	33714	352 349	33752	352 351	33725
352 352	33714	352 355	33715	352 357	33788
352 357	33732	352 358	33731	352 364	33788
352 365	33794	352 365	33731	352 380	33044
352 457	33848	352 458	33849	352 800	19621
352 803	49610	352 815	19717	352 819	19717
352 823	19816	352 826	19617	352 827	19618
352 828	49745	352 829	19621	352 830	19621
352 864	33045	352 947	33044	353 460	33714/9
353 560	33795	353 561	33734	4 566 899	33732
4 709 161	51251	4 803 429	51301	402 642	33785
402 643	33737	402 644	33767	402 645	33786
402 649	33766	402 935	33879	402 937	33754
402 942	33753	423 017	49605	423 121	33877
423 302	33720	423 313	33787	423 315	33895
423 316	33736	423 318	33720	4302 209	49616
4401 909	49111	4401 910	49156	4403 641	19135
4403 661	19136	4403 806	19129	4408 474	49155
4408 510	49143	4408 511	49144	4408 904	49118
4408 904	49118HPS	4408 958	49141	4408 958	33122
4408 958	49140	4408 959	49140	4408 959	33122
4408 959	49142	4412 934	33122	4412 934	49140
4412 936	33122	4412 936	49140	444 065	51594HPS
444 065	51594	444 081	49778	444 087	49779
444 153	33739	444 199	33739	444 200	33792
450 1261	49125	4500 090	49156	4500 094	36704
4500 198	49109HPS	4500 199	49108HPS	4500 254	49110
4500 255	49111	4501 262	49137	4501 263	49138
464 023	49628	4701 744	49611	4701 745	49602
4705 655	49611	4705 716	49627	4708 299	51253
4708 299	33576	4708 299	51254	4708 300	51254
4708 300	33576	4708 300	51252	4708 302	33577
4709 195	51250	4709 702	51255	4806 304	51302
4806 305	51303	4817 515	51303	53 52 000	19620
53 52 007	19629	5352 001	19619	5352 004	19623
5352 005	19622	5352 008	19630	5352 011	19635
5352 012	19636	5352 014	49756	5352 016	19622
5352 016	19633	5352 017	19634	5352 019	19811HPS
5352 020	59849	5352 027	49614	5352 028	49615
5352 029	49612	5352 030	49613	5352 038	19098
5352 039	19097	5402 630	33758	5402 631	33756
5402 634	33762	6606 030	59770	90 094 762	19710
90 094 763	19711	90 125 567	59295	90 125 568	59296
90 168 602	33740	90 272 194	19617	90 272 195	19618
90 272 683	19714	90 295 324	19801	90 304 625	49752
90 334 027	19803/1	90 334 028	19804/1	90 334 031	19613
90 334 032	19614	90 334 035	19615	90 334 036	19616
90 373 519	19610	90 373 520	19611	90 373 521	49752

Die aufgeführten Vergleichsnummern dienen nur zur besseren Identifikation.
References are only specified for a better identification.
Les références mentionées ne servent qu' á une meilleure identification.

OPEL	MAPCO	OPEL	MAPCO	OPEL	MAPCO
90 392 553	49760	90 442 294	19801	90 445 137	19606HPS
90 445 644	19812	90 445 646	19813	90 468 044	49605
90 468 930	19606HPS	90 495 159	19619	90 498 191	19812
90 498 192	19813	90 510 639	19615	90 510 640	19616
90 510 641	19804/1	90 510 641	19803/1	90 510 643	19613
90 510 644	19614	90 510 649	19812	90 510 650	19813
90 511 260	19808	90 538 444	49628	900 905	49603
900 907	49626	902 89 915	49604	90297863	19612
903 73 523	49604	904 73 811	49758	904 73 812	49759
905 10 653	49758	905 10 654	49759	905 11261	19809
912 366	33717	9156 735	33767	920 361	33717
920 373	49743	920 374	49742	9210 351	49627
9293 889	19717	93 189023	59012	93 189024	59013
93 189024	59012	93 195093	51255	93 196541	59012
93 196541	59013	93 196542	59013	93171448	36703
9318 8808	49092	9319 0907	49092	9319 1529	51302
93191671	49622				

PEUGEOT	MAPCO	PEUGEOT	MAPCO	PEUGEOT	MAPCO
3520 J3	19485	3520 J4	19486	3520.A2	19439
3520.A6	19329	3520.A7	19329	3520.A8	19474
3520.A8	19437	3520.A8	19331	3520.A8	19333
3520.A9	19474	3520.A9	19333	3520.A9	19331
3520.A9	19437	3520.C0	19344	3520.C3	19431
3520.C5	19431	3520.C5	19433	3520.C6	19437
3520.C6	19333	3520.C6	19331	3520.C6	19474
3520.C7	19474	3520.C7	19331	3520.C7	19333
3520.C7	19437	3520.E0	19331	3520.E0	19437
3520.E0	19333	3520.E0	19474	3520.E1	19333
3520.E1	19331	3520.E1	19474	3520.E1	19437
3520.E4	19437	3520.E4	19333	3520.E4	19331
3520.E4	19474	3520.E6	19474	3520.E6	19437
3520.E6	19333	3520.E6	19331	3520.E7	19333
3520.E7	19474	3520.E7	19331	3520.E7	19437
3520.E8	19474	3520.E8	19331	3520.E8	19437
3520.E8	19333	3520.E9	19331	3520.E9	19333
3520.E9	19474	3520.E9	19437	3520.F1	19333
3520.F1	19331	3520.F1	19474	3520.F1	19437
3520.F2	19333	3520.F2	19331	3520.F2	19437
3520.F2	19474	3520.F3	19474	3520.F3	19437
3520.F3	19333	3520.F3	19331	3520.F5	19331
3520.F5	19474	3520.F5	19333	3520.F5	19437
3520.F6	19437	3520.F6	19474	3520.F6	19331
3520.F6	19333	3520.F7	19333	3520.F7	19331
3520.F7	19437	3520.F7	19474	3520.F8	19437
3520.F8	19333	3520.F8	19474	3520.F8	19331
3520.G8	19346	3520.G9	19431	3520.G9	19433
3520.H1	19344	3520.H3	19331	3520.H3	19333
3520.H3	19331/1	3520.H3	19437	3520.H3	19474
3520.H3 + 3640.44	19331	3520.H4	19331	3520.H5	19333

Die aufgeführten Vergleichsnummern dienen nur zur besseren Identifikation.
References are only specified for a better identification.
Les références mentionées ne servent qu' á une meilleure identification.

PEUGEOT	MAPCO	PEUGEOT	MAPCO	PEUGEOT	MAPCO
3520.H5	19437	3520.H5	19474	3520.H5	19331/1
3520.H5	19331	3520.H5 + 3640.42	19437	3520.H5 + 3640.51	19474
3520.H7	49301	3520.H8	19439	3520.J4	19485
3520.K4	19329	3520.K6	19487	3520.K8	19383
3520.L0	49084	3520.L1	49086	3520.L7	19398
3520.N3	49084	3520.N4	19332	3520.N4	49086
3520.N6	49320	3520.P1	19385	3520.P2	49301
3520.P4	19433	3520.P4	19431	3520.P6	49082
3520.P8	19431	3520.Q3	19485	3520.R6	19385
3520.R7	49310	3520.S0	19494	3520.S1	19494
3520.S2	19383	3520.V2	49316	3520.V6	49301
3520.W0	19398	3520.37	19351	3520.48	19310
3520.50	19310	3520.51	19310	3520.54	19349
3520.57	19313	3520.60	19313	3520.60	19317
3520.65	19327	3520.68	19327	3520.70	19487
3520.71	19488	3520.76	19441	3520.77	19468
3520.78	19321	3520.79	19322	3520.80	19360
3520.81	19361	3520.84	19333	3520.92	19360
3520.93	19361	3520.95	19461	3520.96	19463
3520.98	19333	3520.98	19437	3520.98	19474
3520.98	19331	3520.99	19474	3520.99	19331
3520.99	19333	3520.99	19437	3521.A1	19332
3521.A1	19438	3521.A1	19475/1	3521.A1	19475
3521.A2	19438	3521.A2	19334	3521.A2	19332
3521.A2	19475/1	3521.A2	19475	3521.A3	19438
3521.A3	19475/1	3521.A3	19334	3521.A3	19475
3521.A3	19332	3521.A5	19475	3521.A5	19438
3521.A5	19475/1	3521.A5	19332	3521.A6	19475
3521.A6	19332	3521.A6	19475/1	3521.A6	19438
3521.A7	19475	3521.A7	19440	3521.A7	19332
3521.A7	19475/1	3521.A7	19438	3521.A8	19438
3521.A8	19332	3521.A8	19475	3521.A8	19475/1
3521.C8	19347	3521.C9	19432	3521.C9	19434
3521.E1	19345	3521.E3	19474	3521.E3	19332
3521.E3	19438	3521.E3	19334	3521.E3	19332/1
3521.E3	19475/1	3521.E3	19475	3521.E3 + 3640.44	19332
3521.E5	19475/1	3521.E5	19475	3521.E5	19440
3521.E5	19332	3521.E5	19438	3521.E5 + 3640.42	19438
3521.E5 + 3640.51	19475	3521.E7	49302	3521.F3	19486
3521.F4	19486	3521.G4	19330	3521,G5	19328
3521.G6	19488	3521.G8	19384	3521.H0	49082
3521.H1	49083	3521.H2	49085	3521.H3	49087
3521.H9	19399	3521.J3	49085	3521.J4	49087
3521.J6	49321	3521.K1	19386	3521.K2	49302
3521.K4	19432	3521.K4	19434	3521.K6	49083
3521.L0	19432	3521.L4	19486	3521.N7	19386
3521.N8	49311	3521.P1	19495	3521.P2	19495
3521.P3	19384	3521.R3	49317	3521.R7	49302
3521.S1	19399	3521.23	49756	3521.26	19352

Die aufgeführten Vergleichsnummern dienen nur zur besseren Identifikation.
References are only specified for a better identification.
Les références mentionées ne servent qu' á une meilleure identification.

PEUGEOT	MAPCO	PEUGEOT	MAPCO	PEUGEOT	MAPCO
3521.31	19311	3521.33	19311	3521.34	19311
3521.37	19350	3521.38	19314	3521.41	19314
3521.41	19318	3521.46	19328	3521.49	19328
3521.52	19442	3521.53	19469	3521.55	19475/1
3521.56	19475/1	3521.64	19432	3521.65	19462
3521.66	19464	3521.68	19475	3521.68	19475/1
3521.68	19332	3521.68	19438	3521.69	19475
3521.69	19475/1	3521.69	19438	3521.69	19332
3521.76	19330	3521.77	19330	3521.78	19475/1
3521.78	19332	3521.78	19475	3521.78	19438
3521.79	19332	3521.79	19438	3521.79	19475
3521.79	19475/1	3521.80	19345	3521.83	19432
3521.85	19434	3521.85	19432	3521.86	19438
3521.86	19475	3521.86	19475/1	3521.86	19332
3521.87	19332	3521.87	19475	3521.87	19438
3521.87	19475/1	3521.90	19438	3521.90	19475
3521.90	19332	3521.90	19475/1	3521.91	19475
3521.91	19332	3521.91	19475/1	3521.91	19438
3521.94	19475/1	3521.94	19438	3521.94	19332
3521.94	19475	3521.95	19438	3521.95	19475
3521.95	19332	3521.95	19475/1	3521.96	19332
3521.96	19475/1	3521.96	19475	3521.96	19438
3521.97	19332	3521.97	19475/1	3521.97	19475
3521.97	19438	3521.98	19475/1	3521.98	19438
3521.98	19475	3521.98	19332	3521.99	19332
3521.99	19475/1	3521.99	19438	3521.99	19475
3523.AA	33334	3523.AG	33340	3523.AJ	33434
3523.CC	33435	3523.CE	33436	3523.16	33305
3523.20	33307	3523.27	33306	3523.31	33306
3523.34	33306	3523.35	33306	3523.40	33320
3523.42	33322	3523.50	33314	3523.51	33313
3523.52	33314	3523.54	33322	3523.58	33306
3523.59	33417	3523.60	33319	3523.61	33318
3523.66	33314	3523.75	33417	3523.76	33316
3523.77	33336	3523.77	33317	3523.80	33315
3523.83	33431	3523.89	33322	3523.91	33434
3523.92	33336	3523.93	33006	3523.94	33001
3523.98	33335	3525.05	33006/1	3608.28	19358
3622.15	19359	3640.15	19307	3640.17	19421
3640.18	19421	3640.20	19415	3640.20	19312
3640.21	19415	3640.21	19312	3640.25	19307
3640.26	19422	3640.27	19307	3640.28	19425
3640.30	19320	3640.31	19319	3640.32	19449
3640.33	19450	3640.34	19425	3640.35	33333
3640.36	19428	3640.37	19320	3640.38	19427
3640.39	19426	3640.42	19427	3640.43	19426
3640.44	19319	3640.48	19371	3640.49	19371
3640.50	19389	3640.50	19473	3640.51	19473
3640.53	19372	3640.54	19499	3640.55	19498

Die aufgeführten Vergleichsnummern dienen nur zur besseren Identifikation.
References are only specified for a better identification.
Les références mentionées ne servent qu' á une meilleure identification.

PEUGEOT	MAPCO	PEUGEOT	MAPCO	PEUGEOT	MAPCO
3640.57	19394	3640.58	49309	3640.60	19372
3640.61	19491	3640.62	19491	3640.65	19491
3640.66	19491	3640.67	49099	3640.68	19372
3640.69	49309	3640.71	19425	3640.72	49309
3640.76	49099	3812.A0	19480	3812.A4	19023
3812.A6	19353	3812.A9	19353	3812.A9	19374
3812.C0	19411	3812.C1	19374	3812.C3	19374
3812.C4	19374	3812.C5	19373	3812.C6	19484
3812.C7	19380	3812.E0	19379	3812.E1	19479
3812.E2	19493	3812.E3	19395	3812.E8	49314
3812.F2	49315	3812.F4	49401	3812.09	19325/1
3812.09	19324/1	3812.15	19355	3812.15	19354
3812.15	19354/1	3812.19	19323	3812.19	19355
3812.25	19323	3812.25	19410	3812.25	19355/1
3812.27	19405	3812.32	19335	3812.35	19355/1
3812.37	19355	3812.38	19335	3812.52	19340/1
3812.52	19340	3812.72	19325	3812.73	19326
3812.92	19336/1	3812.92	19336	3812.94	19410
3812.95	19335	3812.97	19335	3812.98	19324
3812.98	19326	3812.98	19325	3812.99	19409
3817.B3	19395	3817.C7	19380	3817.10	19301
3817.11	19420	3817.14	19417	3817.16	19418
3817.18	19301	3817.21	19315	3817.22	19316
3817.26	19324/1	3817.26	19315	3817.27	19325/1
3817.27	19316	3817.30	19417	3817.31	19418
3817.32	19481	3817.33	19481	3817.34	19483
3817.35	19482	3817.36	19482	3817.37	19382
3817.38	19381	3817.39	19342	3817.40	19341
3817.41	19417	3817.42	19418	3817.43	19382
3817.44	19381	3817.48	19315	3817.48	19325
3817.49	19316	3817.50	19301	3817.50	19336
3817.55	19489	3817.56	19490	3817.57	19393
3817.58	19392	3817.64	49307	3817.67	49312
3817.68	49313	3817.69	19496	3817.70	19497
3817.77	19496	3874.30	19356	3874.31	19357
4006.24	19448	4018.A3	19447	4018.A4	19448
4018.E0	19099	4018.H4	19447	4059.09	19430
4059.12	19492	5087.23	19339HPS	5087.27	19364
5087.30	19451HPS	5087.32	19339HPS	5087.33	19476HPS
5087.34	19337HPS	5087.35	19363	5087.37	19366
5087.39	19337HPS	5087.40	19338HPS	5087.41	19451HPS
5087.42	19367	5087.43	19362HPS	5087.45	19348HPS
5087.46	19337HPS	5087.48	19362HPS	5087.49	19451HPS
5087.50	19375HPS	5087.51	19376HPS	5087.52	19396
5087.53	19397	5087.54	49304HPS	5087.55	49305HPS
5087.62	19375HPS	5091.10	49308	5094.A7	49308
5094.36	33311	5094.37	33311/1	5094.40	33311/2
5094.56	33420	5094.57	33323	5094.59	33324
5094.60	33325	5094.64	33337	5094.65	33424

Die aufgeführten Vergleichsnummern dienen nur zur besseren Identifikation.
References are only specified for a better identification.
Les références mentionées ne servent qu' á une meilleure identification.

PEUGEOT	MAPCO	PEUGEOT	MAPCO	PEUGEOT	MAPCO
5094.82	33300	5131.69	33329	5131.70	33330
5131.71	33321	5131.72	33432	5131.73	33430
5131.94	33303	5151.24	33326	5152.59	33338
5152.62	33433	5178.17	19370HPS	5178.18	19369HPS
5178.21	19369HPS	5178.21	19370HPS	5178.22	19369HPS
5178.30	19370HPS	5178.31	19369HPS	5178.38	19365
5178.39	19368HPS	5178.43	19370HPS	5178.44	19369HPS
5178.46	49303	5178.52	49303	6822.R9	49308
6822.S0	49308	97 507 980	19420		

PORSCHE	MAPCO	PORSCHE	MAPCO	PORSCHE	MAPCO
171 407 365C	19875	171 407 365D	19875	171 407 365F	19876
171 407 365G	19876	171 419 811	19874	477 419 815	19874
955 333 06910	51733	955 333 06911	51733	955 333 06921	51733
955 333 07010	51734	955 333 07011	51734	955 333 07021	51734
955 341 027 00	52716	955 341 027 01	52716	955 341 027 02	52716
955 347 031020	51745	955 347 031021	51745	955 347 03122	51745
955 347 03122 part	51744	955 347 032020	51746	955 347 032021	51746
955 347 03222	51746	955 347 13120	51742	955 347 13121	51742
955 347 13122	51742	955 347 13220	51743	955 347 13221	51743
955 347 13222	51743	95534101730	52714	95534101731	52714
95534101732	52714	95534101733	52714	95534101830	52715
95534101831	52715	95534101832	52715	95534101833	52715
996 341 053 06	52780	996 341 053 07	52780	996 341 053 14	52780
996 341 053 16	52780				

PROTON	MAPCO	PROTON	MAPCO	PROTON	MAPCO
PW521020	59309	PW530031	59206	PW530032	59206

RENAULT	MAPCO	RENAULT	MAPCO	RENAULT	MAPCO
485215612R	49161	5000387023	49106	5000387653	49106
5000387654	49105	5055384809	49105	6000022714	19144
6000022715	19145	6000022720	19169	6000022720	49100
6000022721	19170	6000022721	49101	6000022721	19181
6000022730	19139	6000022731	19140	6000022736	19142
6000022737	19141	6000022752	19180	6000022752	19169
6000022752	49100	6000022753	19170	6000022753	19181
6000022753	49101	6000030047	19130	6000030048	19130/1
6000030064	19134	6000030065	19133	6001547138	49160
6001547140	33127	6001547519	49191	6001547520	49190
6001547606	49194	6001547610	49192	6001547611	49193
6001549988	33173	6001549989	33173	6001550441	49194
6001550442	49192	6001550443	49193	6001550446	49190
6001550447	49191	6025105409	33169	6025308155	49116
6025311529	33123	6025370229	49112	6025370230	49113
6025370493	49114	6025370494	49115	6040002105	49140
6040002245	33124	7700302114	49156	7700302122	36704
7700302123	36705	7700302165	49109HPS	7700302439	36704
7700302440	36705	7700307343	49108HPS	7700309070	49109HPS
7700309071	49108HPS	7700312851	49110	7700312852	49111
7700313944	19196	7700313945	19197	7700413493	19177

Die aufgeführten Vergleichsnummern dienen nur zur besseren Identifikation.
References are only specified for a better identification.
Les références mentionées ne servent qu' á une meilleure identification.

RENAULT	MAPCO	RENAULT	MAPCO	RENAULT	MAPCO
7700413494	19178	7700418693	19143	7700419236	33165
7700419249	33165	7700421804	19143	7700424399	33165
7700424459	33165	7700425227	19196	7700425228	19197
7700429441	33128	7700430765	19147	7700430766	19109/2
7700430766	19148	7700430831	19167	7700430832	19168
7700436302	19147	7700436303	19148	7700437136	49146HPS
7700437136	49146	7700571172	19114	7700571173	19113
7700656318	19103	7700658272	19152	7700754515	33101
7700759418	19166/1	7700760130	33145	7700760264	33103
7700760265	33115	7700763934	33116	7700771562	33117
7700772687	33102	7700781034	19147	7700781035	19148
7700783449	19124	7700783450	19125	7700783454	19163
7700783455	19162	7700783456	19163	7700784170	33145
7700785788	33118	7700789478	33146	7700789815	33104
7700794386	19137	7700794387	19138	7700797821	33168
7700798053	33105	7700799064	33130	7700799065	33129
7700799404	33164	7700800976	33105	7700805494	19164
7700805494	19164HPS	7700806238	33170	7700806239	33171
7700807194	19143	7700807580	19186	7700807581	19187
7700818051	19147	7700818052	19148	7700818053	19167
7700818054	19168	7700819928	33143	7700819929	33144
7700820028	19157	7700820029	19158	7700822503	33148
7700823097	19177	7700823098	19178	7700823580	19186
7700823581	19187	7700824042	33147	7700828843	49139
7700829322	19143	7700829841	19167	7700829842	19168
7700831364	33143	7700831368	19147	7700831369	19148
7700834916	49129	7700834917	49130	7700835929	33167
7700839316	33128	7700840741	33146	7700847382	33172
7701041311	19169	7701041311	49100	7701041311	19180
7701041312	49101	7701041312	19181	7701041312	19170
7701047415	49135	7701047416	49136	7701047812	19169
7701047812	49135	7701047813	49136	7701049282	49143
7701049283	49144	7701056969	49111	7701056970	49156
7701450635	19122	7701450637	19123	7701451904	19102
7701453022	19112	7701455906	19111	7701460770	19136
7701460885	19111	7701460886	19112	7701460955	19105
7701461010	19103	7701461141	19108	7701461151	19108
7701461161	19122	7701461162	19123	7701461331	19115
7701461332	19116	7701461667	19135	7701461770	19136
7701461923	19107	7701462170	19121	7701462182	19109
7701462282	19122	7701462283	19123	7701462427	49104
7701462540	19121	7701462540	19106	7701462692	49105
7701462693	49106	7701463025	19107	7701463025	19107/1
7701463035	19129/1	7701463035	19129	7701463195	19198
7701463195	19126	7701463229	19127	7701463230	19128
7701463321	19108	7701463346	19166	7701463346	19166/1
7701463346	49107	7701463686	19122	7701463687	19123
7701464019	19131	7701464037	19132	7701464313	19198
7701464313	19126	7701464441	19131	7701465689	19128

Die aufgeführten Vergleichsnummern dienen nur zur besseren Identifikation.
References are only specified for a better identification.
Les références mentionées ne servent qu' á une meilleure identification.

RENAULT	MAPCO	RENAULT	MAPCO	RENAULT	MAPCO
7701465917	19150/1	7701466158	19155	7701467218	19160
7701467219	19159	7701467235	19150	7701467235	19150/1
7701467237	19151	7701467271	19153	7701467271	19155
7701467271	19152	7701467272	19152	7701467272	19154
7701467272	19155	7701467273	19133	7701467274	19134
7701467501	19156/1	7701467501	19156	7701467502	19161
7701467539	19175	7701467540	19176	7701468411	19109
7701468820	19111	7701468821	19112	7701468883	19109
7701468952	19172	7701468953	19173	7701469228	19127
7701469229	19198	7701469229	19126	7701469230	19131
7701469231	19108	7701469280	19171	7701469464	49139
7701469502	19173	7701469502	49103	7701469502	19172
7701469517	19160	7701469517	19149	7701469517	19159
7701469569	19188	7701469665	19156/1	7701469665	19156
7701469665	19161	7701469777	19174	7701469778	49102
7701470362	49125	7701470363	49137	7701470364	49138
7701470763	19182	7701470764	19183	7701470765	49100
7701470765	19169	7701470765	19180	7701470766	49101
7701470766	19181	7701470766	19170	7701471125	19193
7701471126	19189	7701471127	19190	7701471143	19194
7701471145	19189	7701471146	19190	7701471844	49126
7701472038	19109	7701472087	49119	7701472113	19195
7701472120	49117/1	7701472143	19194	7701472734	51117/1
7701472735	51117/1	7701472766	49145	7701472843	49135
7701473333	49155	7701474448	49149	7701474492	49135
7701474493	49136	7701474641	49135	7701474642	49136
7701474795	49147	7701474796	49148	7701475841	49159
7701475842	49136	7701476760	19169	7701476760	19180
7701476761	49101	7701476761	19170	7701476762	19189
7701478029	49140	7701478406	49161	7701478407	49157
7701478408	49158	7701478551	49145	770164151	19108
7701646313	19126	7701834570	49100	7701834570	19169
7701834571	19170	7701834571	49101	7701834571	19181
7702111932	33104	7704000681	33100	770476576	49140
8200002868	33121	8200002869	33122	8200002870	49118
8200002870	49118HPS	8200026654	49140	8200026654	49131
8200026655	49140	8200026655	33121	8200026655	49132
8200040618	49120HPS	8200040618	49120	8200041166	33119
8200042594	33128	8200049626	33122	8200050191	49121
8200050191	49121HPS	8200054003	49141	8200054003	33122
8200054006	49142	8200054006	49140	8200127308	19120HPS
8200166159	49124HPS	8200166160	49154HPS	8200197179	19196
8200197187	19197	8200242025	33120	8200247898	49140
8200247898	33122	8200247898	49141	8200247900	33122
8200247900	49140	8200247900	49142	8200254163	49128
8200255760	49127	8200255761	49150	8200255761	49128
8200273728	49131	8200273728	49140	8200273728	33121
8200273729	33121	8200273729	49140	8200273729	49132
8200277960	49160	8200298454	49133	8200298455	49134

Die aufgeführten Vergleichsnummern dienen nur zur besseren Identifikation.
References are only specified for a better identification.
Les références mentionées ne servent qu' á une meilleure identification.

RENAULT	MAPCO	RENAULT	MAPCO	RENAULT	MAPCO
8200298455	49151	8200346941	49151	8200346941	49152
8200346942	49153	8200346942	49151	8200389134	49140
8200389134	33121	8200389134	49131	8200389135	33121
8200389135	49132	820038935	49140	8200452715	33121
8200452715	49131	8200452716	33121	8200452716	49132
8200457208	49133	8200457209	49134	8200457209	49151
8200458813	49140	8200458814	49140	8200565072	49141
8200565072	33122	8200565079	49142	8200565079	33122
8200586561	49162	8200586567	49163	8200602612	33121
8200602612	49131	8200602613	49132	8200602613	33121
8200605381	19120HPS	8200615057	49152	8200615057	49151
8200615058	49153	8200615058	49151	8200651161	33165
8200651163	33146	8200651164	33144	8200651168	33143
8200661217	49118HPS	8200661217	49118	8200669065	49124HPS
8200669066	49154HPS	8200679063	49133	8200679067	49134
8200679067	49151	8200711554	33165	8200713522	49109HPS
8200713523	49108HPS	8200714446	49120HPS	8200714446	49120
8200714448	49121HPS	8200714448	49121	8200737112	19167
8200737114	19168	8200737125	19157	8200737126	19158
8200737132	49129	8200737132	19147	8200737133	19148
8200737133	19109/2	8200737133	49130	8200737134	19147
8200737135	19148	8200737136	19196	8200737137	19197
8200744091	49152	8200744091	49151	8200744092	49153
8200744092	49151	8200755092	49153	8200820918	49191
8200820930	49190	8200942407	19196	8200942408	19197

ROVER	MAPCO	ROVER	MAPCO	ROVER	MAPCO
EGP 1662	19957	EGP1673	33960	GSJ 1002	19507
GSJ 207	19951	GSJ 227	59331	GSJ 228	59330
GSJ 268	19951	GSJ 279	59372	GSJ 280	59371
GSJ 288	19956	GSJ 404	19507	GSJ 407	19504
GSJ 408	19505	GSJ 423	49506	GSJ 424	49507
GSJ 729	19951	GSJ 729	19949	GSJ 730	19954
GSJ 731	19955	GSJ 826	19956	GSJ1000	51691
GSJ1001	51690	GSJ187	59319	GSJ274	59319
GSJ277	59319	GSJ278	59333	GSJ295	59333
GSJ415	49903	GSJ416	49904	GSJ485	49502
GSJ486	49503	GSJ495	19508	GSJ495	19501
GSJ496	19509	GSJ496	19500	GSJ499	49510
GSJ835	49216	GSJ836	49215	GSV1170	49911
GSV1211	19506	KHC10011	19958	RBJ 102120	59509
RBJ 102130	59508	RBJ000370	51691	RBJ100690	49509
RBJ100720	49508	RBJ102120	49503	RBJ102130	49502
RBJ102220	49216	RBJ102230	49215	RBJ102500	51691
RBJ102510	51690	RBK100350	49510	RBM100240	59516HPS
RBX101760	36962	RBX101770	36961	RGD 100561	59518HPS
RGD 100571	59517HPS	RGG 102430	49203	RGG102390	49204
RGX 10007	33223	RGX 100240	33523	RGX 100980	33223

SAAB	MAPCO	SAAB	MAPCO	SAAB	MAPCO

Die aufgeführten Vergleichsnummern dienen nur zur besseren Identifikation.
References are only specified for a better identification.
Les références mentionées ne servent qu' á une meilleure identification.

SAAB	MAPCO	SAAB	MAPCO	SAAB	MAPCO
0350 263	19607	042 48 431	49983	12 786 412	36703
1279 6013	49623	1279 6014	49624	1279 9199	49623
1279 9200	49624	132 37130	49749HPS	244 17251	49749HPS
42 48 449	49984	424 2673	49751	424 2673	49752
424 2681	49753	424 2681	49750	424 6062	33714/9
4242673	19611	4242681	19610	4242731	49604
4242749	19610	4242756	19611	45 66 899	33732
454 3450	19984	454 3468	19985	454 4599	19607/8HPS
456 6899	33788	4686606	19600HPS	48 36 557	19627
483 6557	19628	4835 740	19621	4836540	19626
5063 391	19621	523 3424	49606	523 5650	49620
523 5668	49621	523 9314	49620	523 9322	49621
5236823	19600HPS	737 2170	19983	890 5416	19983
892 4177	19982	895 7045	19980	895 7839	19981
895 8365	49982	895 8373	49981	895 8944	49980
896 1476	33016	896 2250	49606	896 5253	33015
897 2135	19980	898 5160	19982	898 5384	19983
898 5388	19983	899 3321	19983	899 3354	19982
899 3388	19983	899 3396	19982	899 3453	19981
899 3560	19982	899 4212	19980	899 4212S1	19980

SEAT	MAPCO	SEAT	MAPCO	SEAT	MAPCO
SE 1411 401 04A	19044	SE021 156 110B	19064	SE022 162 406A	19042
SE028 140 104A	19048	SE028 156 110A	19045	SE127 156 110A	19025
SE127 162 449A	19452	SE138 156 110A	19041	SE141 140 104A	19048
SE141 156 110A	19045	SE141 162 410A	19046	022 162 449A	19043
1H0 407 151A	49664	1H0 407 152	49665	1H0 407 365	19679/1
1H0 407 365	19679	1H0 411 314	33905	1H0 422 803A	49873
1H0 422 804A	49874	1H0 501 541	33858	1H0 501 541	33858/2
1H0 501 541A	33858	1H0 501 541A	33858/2	1J0 199 429	36852
1J0 407 151A	49704	1J0 407 151B	49704	1J0 407 151C	49704
1J0 407 181	33903	1J0 407 181A	33903	1J0 407 365A	49702
1J0 407 365C	49702/1	1J0 407 365C	49702	1J0 407 365D	49702
1J0 407 366A	49703/1	1J0 407 366A	49703	1J0 407 366C	49703
1J0 407 366C	49703/1	1J0 411 314G	33824	1J0 411 314T	33824
1J0 411 315C	49868	1J0 411 315G	49867	1J0 411 316D	49794
1J0 422 803B	49690	1J0 422 804B	49691	1J0 422 811B	49700
1J0 422 812B	49701	1J0 501 541C	33912	1J0 501 541C	33912/2
1K0 199 231G	36948	1K0 199 231J	36948	1K0 199 232G	36949
1K0 199 232J	36949	1K0 407 151AC	51726	1K0 407 151M	51726
1K0 407 151N	51715	1K0 407 152AC	51727	1K0 407 152M	51727
1K0 407 152P	51716	1K0 407 182	36950	1K0 407 182 A	36950
1K0 407 183E	36939	1K0 407 365C	51724	1K0 407 365E	51724
1K0 407 366C	51725	1K0 411 315B	51825HPS	1K0 411 315D	51825HPS
1K0 411 315J	51825HPS	1K0 423 810A	51723	1K0 423 811A	51826
1K0 423 811E	51826	1K0 423 812A	51827	1K0 423 812E	51827
1K0 423 812J	51827	1K0 423 812K	51741	1K0 505 323H	52718
1K0 505 465C	51829HPS	1K0 505 465D	51829HPS	1K0 505 465H	51829HPS
138 156 532A	33004	141 162 449A	19452	191 407 151B	19858/1
191 407 151B	19858/2	191 407 151B	19858	191 407 153	33890

Die aufgeführten Vergleichsnummern dienen nur zur besseren Identifikation.
References are only specified for a better identification.
Les références mentionées ne servent qu' á une meilleure identification.

SEAT	MAPCO	SEAT	MAPCO	SEAT	MAPCO
191 407 153A	19858	191 407 181A	33818	191 407 181B	33818
191 407 182	33819	191 407 190A	33818/9	191 411 314	33904
191 411 315	49850	191 411 315A	51862	191 411 315B	49850
191 411 329	49862/9	191 419 803	19892	191 419 803A	19892
191 419 804	19888	191 419 804A	19888	191 419 811	19877
191 419 812	19878	191 422 803	19860	191 422 803A	19860
191 422 804	19861	191 422 804A	19861	191 501 541	33833/2
191 501 541	33833	3C0 407 366A	51725	3C0 423 811B	51826
3C0 423 812B	51827	357 407 182	33819	357 407 365	19889/1
357 407 365	19889	357 407 365A	19889	4 402 360	19041
4 402 361	19041	4 410 415	19040	4E0 419 821C	51736
4F0 419 811C	59707OES	4F0 419 811D	59707OES	5 983 406	19047
535 411 315	19853HPS	6E0 419 811	51822	6E0 419 812	51823
6K0 411 315	51861	6K0 422 811	51822	6K0 422 812	51823
6N0 407 151	19686/1	6N0 407 151B	19686/1	6N0 407 175	19895/9
6N0 407 175A	19895/9	6N0 407 181	33836	6N0 407 182	33834
6N0 407 365	19895	6N0 407 365	19895/1	6N0 407 365A	19896/1
6N0 407 365A	19896	6N0 411 315	49862	6N0 411 315	49862/1
6N0 411 315A	51821	6N0 411 315C	49862/1	6N0 411 315C	49862
6N0 411 315D	51821	6N0 411 329	49862/9	6N0 419 803	19688
6N0 419 804	19689	6N0 419 811	19885	6N0 419 812	19886
6N0 422 803A	19696	6N0 422 804A	19697	6N0 422 811	49871
6N0 422 812	49872	6N0 501 541D	33937	6Q0 407 151L	59813
6Q0 407 183	36939	6Q0 407 183A	36939	6Q0 407 365A	59810
6Q0 407 366A	59811	6Q0 419 811C	59806	6Q0 419 812C	59807
6Q0 423 803B	59808	6Q0 423 803E	59808/1	6Q0 423 804B	59809
6R0 501 541A	33912	6X0 407 151	51819/1	6X0 407 151A	51819/1
6X0 422 811	51822	6X0 422 812	51823	7M0 407 151B	49876
7M0 407 152B	49877	7M0 407 181A	33928	7M0 407 365A	49861
7M0 411 317C	49856HPS	7M0 411 317D	49856HPS	7M0 411 517C	49856HPS
7M0 422 803AF	49866	7M0 422 803G	49866	7M0 422 804G	49866/2
7M0 422 817A	49857	7M0 422 818	49858	7M0 422 818A	49858
7M0 422 818B	49858	7M0 501 541	33908	7M0 505 221B	33864
7M0 505 221C	33864	7M3 411 317	49856HPS	7M3 411 317C	49856HPS
7M3 422 803A	49866/1	7M3 422 818	49858	8D0 407 515A	36773
8D0 407 515B	36773	8D0 407 515C	36773	8E0 411 317	52712
8E0 411 318	52713	8E0 422 821C	49738		

SKODA	MAPCO	SKODA	MAPCO	SKODA	MAPCO
007 296 377	36781	007 296 379	36780	007 304 447	19971
007 304 448	19972	007 350 278N	19968	1 J0 407 366A	49703
1J0 199 429	36852	1J0 407 151A	49704	1J0 407 151B	49704
1J0 407 151C	49704	1J0 407 181	33903	1J0 407 181A	33903
1J0 407 365A	49702	1J0 407 365A	49702/1	1J0 407 365C	49702/1
1J0 407 365C	49702	1J0 407 365D	49702	1J0 407 366A	49703/1
1J0 407 366C	49703	1J0 407 366C	49703/1	1J0 411 314S	33927
1J0 411 315D	49793	1J0 411 315G	49867	1J0 411 316D	49794
1J0 422 803	49869	1J0 422 803A	49869	1J0 422 803B	49690
1J0 422 804	49870	1J0 422 804A	49870	1J0 422 804B	49691
1J0 422 811A	59895	1J0 422 811B	49700	1J0 422 812A	59896

Die aufgeführten Vergleichsnummern dienen nur zur besseren Identifikation.
References are only specified for a better identification.
Les références mentionées ne servent qu' á une meilleure identification.

SKODA	MAPCO	SKODA	MAPCO	SKODA	MAPCO
1J0 422 812B	49701	1J0 501 541C	33912/2	1J0 501 541C	33912
1K0 199 231 J	36948	1K0 199 231G	36948	1K0 199 231J	36948
1K0 199 232G	36949	1K0 199 232H	36949	1K0 199 232J	36949
1K0 407 151AC	51726	1K0 407 151M	51726	1K0 407 151N	51715
1K0 407 152AC	51727	1K0 407 152M	51727	1K0 407 152P	51716
1K0 407 182	36950	1K0 407 182 A	36950	1K0 407 183E	36939
1K0 407 365C	51724	1K0 407 366C	51725	1K0 411 315B	51825HPS
1K0 411 315D	51825HPS	1K0 423 810A	51723	1K0 423 811A	51826
1K0 423 811C	51740	1K0 423 811G	51740	1K0 423 811J	51826
1K0 423 811K	51740	1K0 423 812E	51827	1K0 423 812G	51741
1K0 423 812J	51827	1K0 423 812K	51741	1K0 505 323H	52718
1K0 505 465H	51829HPS	1K0 505 465J	51829HPS	114 508 060	33953
115 002 491	33952	115 420 240	19962	115 422 291	19994
115 422 292	33950	115 500 440	19961	115 590 801	33954
115 590 802	33955	191 407 182	33819	191 411 315A	51862
3C0 407 365A	51724	3C0 407 366A	51725	3C0 423 811B	51826
357 407 182	33819	4B0 407 151	51730	4B0 407 515	36915
4B0 419 801M	49738	4B0 419 811G	59707OES	4B0 419 811Q	59707OES
4B3 407 151A	51730	4B3 407 151C	51730	4B3 407 151K	51730
4D0 407 151P	49710OES	4D0 407 183P	33932	4D0 407 183Q	33932
4D0 407 509H	49791OES	4D0 407 693AD	49708OES	4D0 407 694AD	49709OES
4D0 419 811J	59707OES	4D0 419 821Q	49738	4D0 422 821	49738
4D0 422 821A	49738	4E0 407 183A	33932	4E0 411 317E	52711
4E0 419 821C	51736	4F0 407 151	52710	4F0 407 151A	52710
4F0 419 811D	59707OES	6N0 411 315	49862	6N0 411 315C	49862
6Q0 407 183	36939	6Q0 407 183A	36939	6Q0 407 365A	59810
6Q0 407 366A	59811	6Q0 411 315A	59812HPS	6Q0 411 315C	59812HPS
6Q0 411 315E	59812HPS	6Q0 411 315F	59812HPS	6Q0 411 315G	59812HPS
6Q0 411 315J	59812HPS	6Q0 423 803B	59808	6Q0 423 804B	59809
6Q0 423 811	59806	6Q0 423 812	59807	6R0 501 541A	33912
6U0 407 151A	19971	6U0 407 151B	19971	6U0 407 152A	19972
6U0 407 152B	19972	6U0 407 182	19993	6U0 407 365	19962
6U0 407 807	19962	6U0 422 807	19973	6U0 422 811	19961
6U0 512 333	33957	6U6 407 359A	36780	6U6 407 360A	36781
8D0 407 509C	49791OES	8D0 407 510C	49792OES	8D0 411 317D	49683/1OES
8D0 411 317D	49683OES	8D0 411 318D	49684/1OES	8D0 411 318D	49684OES
8D0 411 506K	49683OES	8D0 411 506K	49683/1OES	8E0 407 151R	51710OES
8E0 407 693AG	49708OES	8E0 411 317	52712	8E0 422 821	49738

SMART	MAPCO	SMART	MAPCO	SMART	MAPCO
Q0005102V005000000	59901HPS	0001802V004	59904	0001802V004000000	59904
0002271V007000000	59902	0005102V005000000	59901HPS	0014141V001	59900
0015642V001	59902	0015642V001000000	59902	048 87 V002 000	59903
048 87 V004 000	59903	048 87 V005 000	59903	048 87 V006 000	59903
15642V001	59902	15642V001000000	59902	1802V004000000	59904
2271V007	59902	2271V007000005	59902	2271V009000000	59902
4887V002000000	59903	4887V006000000	59903	5102V005	59901HPS
5102V005000000	59901HPS	7001V006000000	59900		

SUBARU	MAPCO	SUBARU	MAPCO	SUBARU	MAPCO

Die aufgeführten Vergleichsnummern dienen nur zur besseren Identifikation.
References are only specified for a better identification.
Les références mentionées ne servent qu' á une meilleure identification.

SUBARU	MAPCO	SUBARU	MAPCO	SUBARU	MAPCO
20420-AA003	59595	20420-AA004	59597	20481-AA001	59596
21067-GA050	49560	31310-GA152	49559	31320-GA190	49558
31320-GA200	49557	34140-AA030	49559	34140-AA040	59364
34140-FC000	59364	48810-60B00	59201	7210-67000	59297
7210-67002	59297	7210-67003	59297	7210-67020	49556
7210-67021	49556	7313-10140	49555	7313-20020	49554

SUZUKI	MAPCO	SUZUKI	MAPCO	SUZUKI	MAPCO
42311-60A00	59300	42420-60A00	59300	42420-62J00	51255
42420-62J00000	51255	4242065D00	59540HPS	42420-65D00000	59300
42420-80J00	59024	42420-80J00000	59024	45020-63G01	51590
45200-50E00	19518	45200-50001	49565	45200-69DV1	19518
45200-77500	59289	45200-78002	19518	45200-82000	49595
45200-84000	19518	45200-85001	49565	45200-85002	19518
45200-85002	49565	45201-57KA0000	51253	45201-57K00000	51253
45201-60B01	49293	45201-62J00	51254	45201-63G01	51591
45201-63J00	51254	45201-65D01	51596	45201-67D01	51596
45201-72K00000	51253	45202-57KA0000	51252	45202-57K00000	51252
45202-60B01	49292	45202-63G01	51590	45202-63J00	51254
45202-65D01	51595	45202-67D01	51595	45202-72K00000	51252
45262-79J00-000	33576	45530-62J00	33577	45530-62J000	33577
45530-63J00-000	33577	45540-62J00000	33576	45700-60A00	59324
46201-60B00	49548	46201-60B02	49548	46201-60B11	49548
46202-60B00	49549	46202-60B02	49549	46202-60B11	49549
46300-60B00	49519	46300-60B10	49594	46300-70C02	49599
46630-60B00	51593	46630-60B01	59850	46630-60B10	51592
46630-60B11	59299	46630-60G00	59850	48810-60A00	49562
48810-60B00	59201	48810-60J00000	51250	48810-60810	51250
48810-60810000	51250	48810-63J00	51250	48810-63J00000	51250
48810-76G00	59201	48810-79000	49564	48810-80000	49562
48810-82000	59201	48810-83300	49562	48810-84000	59320
48810-84001	59320	48820-A60A00	49561	48820-60A00	49561
48820-60E00	49561	48820-77E00	49561	48820-79000	49563
48830-60B00	59298	48830-63J00	51251	48830-63J00000	51251
48830-82000	49596	48830-83E00	49602	48830-84000	59317
54618-50A00	59850				

SVW	MAPCO	SVW	MAPCO	SVW	MAPCO
1K0 407 182	36950	4B0 407 515	33876	4B0 419 811E	49707HPS
4B0 419 811E	49707OES	4D0 407 181H	33839	4D0 407 182E	33840
4D0 407 182G	33840	4D0 407 183AB	33932	4D0 407 183AC	33932
4D0 422 821A	49738	4F0 419 811C	49707HPS	4F0 419 811C	49707OES
6Q0 411 315 G	59812HPS	6Q0 411 315 N	59812HPS	8D0 407 509C	49791OES
8D0 407 510E	49792OES	8D0 411 317D	49683OES	8D0 411 317D	49683/1OES
8D0 411 318D	49684OES	8D0 411 318D	49684/1OES	8E0 407 509A	49791OES
8E0 407 510A	49792OES	8E0 407 693K	49708OES	8E0 407 693Q	49708OES
8E0 419 811	49707HPS	8E0 419 811	49707OES	8E0 419 811B	49707HPS
8E0 419 811B	49707OES				

TALBOT	MAPCO	TALBOT	MAPCO	TALBOT	MAPCO
0012861400	19204	12861400	19204	32364W	19204

Die aufgeführten Vergleichsnummern dienen nur zur besseren Identifikation.
References are only specified for a better identification.
Les références mentionées ne servent qu' á une meilleure identification.

TALBOT	MAPCO	TALBOT	MAPCO	TALBOT	MAPCO
381718	19301	94036401.50	19307		

TOYOTA	MAPCO	TOYOTA	MAPCO	TOYOTA	MAPCO
J45460-39215	59262	43308-59035	51565	43310-39016	51564
43330 29405	51389	43330 29615	51389	43330-09070	49552
43330-09230	49552	43330-19025	59334	43330-19045	59563
43330-19065	19562	43330-19065	19569	43330-19066	19569
43330-19066	19562	43330-19075	59563	43330-19085	59564
43330-19095	19563	43330-19115	19563	43330-19115	49552
43330-29095	59318	43330-29105	59335	43330-29115	59318
43330-29125	59335	43330-29135	59323	43330-29136	59323
43330-29137	59323	43330-29138	59323	43330-29139	59323
43330-29145	59565	43330-29146	59565	43330-29155	59335
43330-29175	59318	43330-29185	59565	43330-29205	59323
43330-29225	59234	43330-29235	59566	43330-29245	59318
43330-29265	19571	43330-29265	19563	43330-29292	59335
43330-29315	19563	43330-29315	19571	43330-29325	59234
43330-29326	59234	43330-29375	19571	43330-29375	19563
43330-39135	59569	43330-39245	59569	43330-39265	59260
43330-39285	59567	43330-39295	59569	43330-39315	59260
43330-39415	59354	43330-39435	59567	43340 29175	51388
43340 29215	51388	43340-19015	19561	43340-19015	19568
43340-19016	19561	43340-19016	19568	43340-19025	59568
43340-29095	59318	43340-39225	59569	43340-39245	59260
43340-39325	59353	43350-29035	51383	43350-29036	51383
43350-29065	59235	43350-29076	51383	43350-29095	59235
43350-39035	59236	43350-39045	59261	43350-39075	59236
43350-39085	59261	43360-29055	51383	43360-29056	51383
43360-39075	59261	43360-39085	59261	45045-69065	59237
45046-09100	49567	45046-09295	49307	45046-19175	19560
45046-19205	59273	45046-19206	59273	45046-19213	59274
45046-19213	59273	45046-19265	51381	45046-29115	59278
45046-29125	59282	45046-29125	59278	45046-29145	59274
45046-29165	59275	45046-29205	59274	45046-29215	59238
45046-29235	59239	45046-29255	59276	45046-29275	59277
45046-29305	19560	45046-29335	59277	45046-29365	49567
45046-39105	59278	45046-39106	59278	45046-39125	59278
45046-39165	59278	45046-39175	59278	45046-39215	59278
45046-39235	59278	45046-39385	59278	45046-59026	59561
45047 09125	49306	45047-09030	49566	45047-19115	51380
45047-29045	59279	45047-29065	59280	45047-29075	59281
45047-29105	59281	45047-29125	49566	45047-59026	59560
45330-19095	19571	45406-29115	59282	45406-39085	59282
45406-39086	59282	45406-39095	59282	45406-39115	59282
45406-39125	59282	45406-39135	51567	45406-39165	51567
45406-39175	51567	45460-29215	59262	45460-39155	59262
45460-39225	59262	45490-39245	59240	45490-39325	59240
45490-39355	59240	45503 39225	51390	45503-05010	49289
45503-05020	49287	45503-05050	49287	45503-12130	51382
45503-19036	59332	45503-19125	19564	45503-19135	19565

Die aufgeführten Vergleichsnummern dienen nur zur besseren Identifikation.
References are only specified for a better identification.
Les références mentionées ne servent qu' á une meilleure identification.

TOYOTA	MAPCO	TOYOTA	MAPCO	TOYOTA	MAPCO
45503-19155	59263	45503-19195	59263	45503-19205	19566
45503-19215	19567	45503-29105	59328	45503-29155	59264
45503-29165	59265	45503-29255	59266	45503-29295	59267
45503-29355	59268	45503-29355	59272	45503-29365	19567
45503-29385	19566	45503-29435	49288	45503-29475	59270
45503-29615	49288	45503-29765	59293	45503-39055	59272
45503-39135	59272	45503-52010	59294	45503-59045	59294
45504-28030	59293	48061-05010	33566	48066-29075	59286
48067-29075	59285	48068-02010	49551	48068-05040	49577
48068-05041	49577	48068-05050	49258/1	48068-05050	49258
48068-06070	51553	48068-12110	49277	48068-12130	49571
48068-12140	49571	48068-12160	49551	48068-12170	49551
48068-12171	49551	48068-12180	49551	48068-12181	49551
48068-12181	49573	48068-12190	49551	48068-12191	49551
48068-12260	51561	48068-16060	59287	48068-16100	59287
48068-16120	59287	48068-20260	49575	48068-33010	59375
48068-33030	51555	48068-33050	51553	48068-33070	51553
48068-35081	59392	48068-42012	49273	48068-42022	49273
48068-42040	59381	48068-42040	59381/1	48068-46011	59287
48068-59035	49569	48068-59035part	59562	48068-60010	51385
48069-02010	49550	48069-05040	49576	48069-05041	49576
48069-05050	49257/1	48069-05050	49257	48069-06070	51552
48069-10031	59288	48069-12110	49276	48069-12130	49570
48069-12140	49570	48069-12160	49550	48069-12170	49550
48069-12171	49550	48069-12180	49550	48069-12181	49572
48069-12181	49550	48069-12190	49550	48069-12191	49550
48069-12260	51560	48069-16040	59288	48069-16060	59288
48069-16100	59288	48069-16120	59288	48069-16180	49550
48069-20260	49574	48069-20260	33563	48069-33010	59374
48069-33030	51554	48069-33050	51552	48069-33070	51552
48069-35081	59391	48069-42012	49272	48069-42022	49272
48069-42040	59380/1	48069-42040	59380	48069-46011	59288
48069-59035	49568	48069-59035part	59562	48069-60010	51384
48610-35040	51572	48610-39085	49951	48610-60050	51387
48610-60070	51387	48630-35020	51571	48630-39055	49950
48630-60020	51386	48650-20021	49259	48654-05040	33565
48654-12050	33560	48654-12070	33561	48654-12070-2	33561
48654-20170	33564	48655-12120	33562	48655-20140	33566
48655-20140	33563	48810-0L010	51378HPS	48810-05012	49270HPS
48810-20010	19576	48810-20020	19577	48810-26030	51588
48810-28010	49284HPS	48810-28010	49283HPS	48810-28010	59361
48810-28010	49283	48810-28010	59361HPS	48810-28020	49283HPS
48810-28020	49284HPS	48810-28020	49283	48810-30030	51585
48810-30030	51585HPS	48810-33010	49280	48810-33010	49280HPS
48810-60010	51568	48810-60040	51378HPS	48819 52010	51391
48819-70010	49308	48820-AD010	51569	48820-0L030	51379HPS
48820-02070	51392	48820-05012	49271HPS	48820-20010	19574
48820-20021	19572	48820-20030	19575	48820-20040	19578
48820-26030	51589	48820-28010	49284	48820-28010	59362

Die aufgeführten Vergleichsnummern dienen nur zur besseren Identifikation.
References are only specified for a better identification.
Les références mentionées ne servent qu' á une meilleure identification.

TOYOTA	MAPCO	TOYOTA	MAPCO	TOYOTA	MAPCO
48820-28010	59362HPS	48820-28030	49284	48820-28050	59363
48820-28050	59363HPS	48820-30050	51584HPS	48820-30050	51584
48820-32010	51597	48820-32010	51597HPS	48820-33010	19573
48820-33020	49281HPS	48820-33020	49281	48820-35010	51586
48820-35030	51569	48820-42010	49274HPS	48820-42020	49237
48820-42020	49237HPS	48820-42030	51392	48820-44020	51373HPS
48820-47010	51577HPS	48820-60010	51573	48820-60032	51574
48820-60050	51379HPS	48830-05020	51377HPS	48830-06030	51575
48830-12060	49579HPS	48830-21020	51372	48830-32010	49579HPS
48830-32040	49282HPS	48830-32040	49282	48830-33010	49285
48830-35010	51587	48830-35020	51570	48830-42010	49239
48830-48010	51575	48830-60010	51576	48830-60030	51374HPS
48840-21010	51371	48840-42010	49238		

VAG	MAPCO	VAG	MAPCO	VAG	MAPCO
J43 3303 9295	59569	J433 503 9075	59236	J45 046 391 65	59282
J45 046 391 75	59278	J45 046 392 35	59278	J45 406 391 15	59282
1H0 407 151	19870	1H0 407 151A	49664	1H0 407 152	49665
1H0 407 365	19679	1H0 407 365	19679/1	1H0 411 314	33905
1H0 419 803	19862	1H0 419 804	19863	1H0 422 803	19864
1H0 422 803A	49873	1H0 422 803B	49672	1H0 422 803C	49672
1H0 422 804	19865	1H0 422 804A	49874	1H0 422 804B	49673
1H0 422 804C	49673	1H0 501 541	33858	1H0 501 541	33858/2
1H0 501 541A	33858/2	1H0 501 541A	33858	1H9 501 541	33909
1H9 501 541	33909/4	1J0 199 429	36852	1J0 407 151A	49704/2
1J0 407 151A	49704	1J0 407 151A	49704/1	1J0 407 151B	49704
1J0 407 151B	49704/1	1J0 407 151B	49704/2	1J0 407 151C	49704
1J0 407 365A	49702/1	1J0 407 365A	49702	1J0 407 365C	49702/1
1J0 407 365C	49702	1J0 407 365D	49702	1J0 407 365D	49702/1
1J0 407 366A	49703/1	1J0 407 366A	49703	1J0 407 366B	49703
1J0 407 366C	49703	1J0 407 366C	49703/1	1J0 407 366D	49703
1J0 411 314G	33824	1J0 411 314T	33824	1J0 411 315B	49867
1J0 411 315B	49868	1J0 411 315C	49868	1J0 411 315C	49867
1J0 411 315D	49793	1J0 411 315G	49867	1J0 411 315J	49868
1J0 411 315J	49867	1J0 411 316D	49794	1J0 422 803	49869
1J0 422 803A	49869	1J0 422 803B	49690	1J0 422 804	49870
1J0 422 804A	49870	1J0 422 804B	49691	1J0 422 807B	49690/1
1J0 422 807E	49690/1	1J0 422 811A	59895	1J0 422 811B	49700
1J0 422 812A	59896	1J0 422 812B	49701	1J0 422 812E	59817
1J0 501 541C	33912	1K0 407 151AA	51715	1K0 407 151AB	51715
1K0 407 151AC	51726	1K0 407 151AE	51715	1K0 407 151M	51726
1K0 407 151N	51715	1K0 407 151P	51715	1K0 407 151Q	51715
1K0 407 152AA	51716	1K0 407 152AB	51716	1K0 407 152AC	51727
1K0 407 152AE	51716	1K0 407 152AH	51716	1K0 407 152BC	51716
1K0 407 152M	51727	1K0 407 152N	51716	1K0 407 152P	51716
1K0 407 152Q	51716	1K0 407 365B	51724	1K0 407 365C	51724
1K0 407 365E	51724	1K0 407 366B	51725	1K0 407 366C	51725
1K0 407 366E	51725	1K0 505 323H	52718	1K0 505 465C	51829HPS
1K0 505 465D	51829HPS	1K0 505 465H	51829HPS	1K0 505 465J	51829HPS
1K0 505 465K	51829HPS	113 415 821	51810	115 500 440	19961

Die aufgeführten Vergleichsnummern dienen nur zur besseren Identifikation.
References are only specified for a better identification.
Les références mentionées ne servent qu' á une meilleure identification.

VAG	MAPCO	VAG	MAPCO	VAG	MAPCO
131 405 361E	51800	131 405 361F	51800	131 405 361G	51800
131 405 371G	51801	131 405 371H	51801	131 405 371J	51801
131 415 813D	51807	131 415 813E	51807	131 415 813F	51807
171 407 181	33820	171 407 181A	33820	171 407 365C	19875
171 407 365D	19875	171 407 365F	19876	171 407 365G	19876
171 419 804	19891	171 419 804A	19891	171 419 811	19874
171 419 811A	19874	171 419 812	19874	171 419 821	19891/1
171 419 821A	19891/1	175 419 804	19891	191 407 151B	19858
191 407 151B	19858/1	191 407 151B	19858/2	191 407 153	33890
191 407 153A	19858	191 407 181A	33818	191 407 181B	33818
191 407 181D	33818	191 407 181E	33818	191 407 182	33819
191 407 190A	33818/9	191 407 365	19855/2	191 407 365	19855/1
191 407 365	19879	191 407 365	19879/1	191 407 365A	19855/1
191 407 365A	19879/1	191 407 365A	19879	191 407 365A	19855/2
191 407 365B	19879	191 407 365B	19855/1	191 407 365B	19879/1
191 407 365B	19855/2	191 411 314	33904	191 411 315A	51862
191 411 315B	49850	191 411 329	49862/9	191 419 803	19892
191 419 803A	19892	191 419 804	19888	191 419 804A	19888
191 419 811	19877	191 419 812	19878	191 422 803	19860
191 422 803A	19860	191 422 804	19861	191 422 804A	19861
191 501 541	33833	191 501 541	33833/2	2D0 407 361A	49831
2D0 407 361B	49831	2D0 411 041A	36947	2D0 411 041B	33947
2D0 411 051	59854	2D0 411 052	59855	2D0 422 803	49833
2D0 422 811	49830	2D0 511 413	33946	2E0 411 317C	52813
2E0 411 318C	52814	2E0 511 051F	52815	2E0 713 491	52810
211 405 371A	19881	211 405 371B	19881	251 407 077	33859
251 407 077B	33859	251 407 175	33900	251 407 175A	33900
251 407 179	33897	251 407 183	33896	251 407 183B	33896
251 407 187	19884	251 407 187A	19884	251 407 187B	19884
251 407 187C	19884	251 407 361	19883	251 411 041C	33814
251 419 803	19887	251 419 811	19874	251 419 821	19887
281 407 077	33929	281 407 187	19852	281 407 187B	19852
281 407 361	19851	281 407 361B	19851	281 411 041	33815
281 411 045	33945	281 415 801	51806	281 415 801D	51806
281 415 801D	51803	281 415 801D	51802	281 415 802	51805
281 415 802A	51805	291 511 171C	36770	3A0 422 803C	49692
3A0 422 804C	49693	3A0 422 811	59816	3A0 422 812	59817
3A0 422 812A	59817	3A0 501 541	33871/4	3A0 501 541	33871
3C0 407 151E	52717	3C0 407 365A	51724	3C0 407 366A	51725
321 419 811A	19850	321 501 541	33826	321 501 541	33826/4
333 501 541	33871	357 407 151	19690/1	357 407 153	19690/1
357 407 181	33818	357 407 182	33819	357 407 365	19889
357 407 365A	19889	357 411 313	33935	357 411 313A	33949
357 411 314	33948	357 411 314A	36914	357 411 315	49865/1
357 411 315	49865	357 411 315A	49860	357 411 315A	49860/1
357 411 315C	49865/1	357 411 315C	49865	357 411 315D	49860/1
357 411 315D	49860	357 411 329	49860/9	357 419 803	19871
357 419 803A	19871	357 419 804	19872	357 422 803	19682
357 422 803A	49674	357 422 804	19683	357 422 804A	49675

Die aufgeführten Vergleichsnummern dienen nur zur besseren Identifikation.
References are only specified for a better identification.
Les références mentionées ne servent qu' á une meilleure identification.

VAG	MAPCO	VAG	MAPCO	VAG	MAPCO
357 501 541	33871	357 501 541A	33871	357 501 541A	33871/4
4A0 407 151	19694	4A0 407 152	19695	4A0 407 181A	33892
4A0 407 183D	33878	4A0 411 327A	36904	4A0 411 327F	33938
4A0 419 801A	49789	4A0 419 802A	49790	4A0 419 811A	19692
4A0 419 812A	19693	4A0 505 389	49686	4A0 511 247	33899
4A0 511 247B	36941	4B0 407 151	51730	4B0 407 515	36915
4B0 419 801B	49732	4B0 419 801E	49732	4B0 419 801M	49732
4B0 419 811	49707HPS	4B0 419 811	49707OES	4B0 419 811A	49707HPS
4B0 419 811A	49707OES	4B0 419 811B	49707HPS	4B0 419 811B	49707OES
4B0 419 811C	49707HPS	4B0 419 811C	49707OES	4B0 419 811D	59707OES
4B0 419 811E	49707OES	4B0 419 811E	49707HPS	4B0 419 811F	49707HPS
4B0 419 811F	49707OES	4B0 419 811G	59707OES	4B0 419 811J	49707HPS
4B0 419 811J	49707OES	4B0 419 811J	59707OES	4B0 419 821G	49738
4B0 501 522D	36782	4B0 501 522E	36782	4B3 407 151A	51730
4B3 407 151C	51730	4B3 407 151K	51730	4B3 498 998	59826
4B3 498 998	59826/1	4B3 498 998S1	59826/1	4D0 407 151A	49710OES
4D0 407 151B	49710OES	4D0 407 151C	49710OES	4D0 407 151E	49710OES
4D0 407 151G	49710OES	4D0 407 151H	49710OES	4D0 407 151J	49710OES
4D0 407 151P	49710OES	4D0 407 181F	33839	4D0 407 181H	33839
4D0 407 182E	33840	4D0 407 183AA	33932	4D0 407 183AB	33932
4D0 407 183M	33932	4D0 407 183N	33932	4D0 407 183P	33932
4D0 407 183Q	33932	4D0 407 505B	49713OES	4D0 407 505D	49713OES
4D0 407 505F	49713OES	4D0 407 505H	49713OES	4D0 407 509G	49791OES
4D0 407 509J	49791OES	4D0 407 510G	49792OES	4D0 407 515C	33876
4D0 407 693AC	49708OES	4D0 407 693AD	49708OES	4D0 407 693E	49708OES
4D0 407 693H	49708OES	4D0 407 693K	49708OES	4D0 407 693M	49708OES
4D0 407 693N	49708OES	4D0 407 694AC	49709OES	4D0 407 694AD	49709OES
4D0 407 694E	49709OES	4D0 407 694H	49709OES	4D0 407 694K	49709OES
4D0 407 694M	49709OES	4D0 407 694N	49709OES	4D0 411 317K	49685OES
4D0 411 327E	33939	4D0 411 327F	33940	4D0 411 327G	33939
4D0 411 327H	33940	4D0 419 801B	49732	4D0 419 801D	49732
4D0 419 801L	49732	4D0 419 811A	49707HPS	4D0 419 811A	49707OES
4D0 419 811B	49707HPS	4D0 419 811B	49707OES	4D0 419 811G	49707HPS
4D0 419 811G	49707OES	4D0 419 821Q	49738	4D0 422 821	49738
4D0 498 998C	59822	4D0 498 998C	59821	4D0 498 998C	59821/1
4D0 501 529A	49716	4D0 501 529E	49716	4D0 501 529F	49716
4D0 505 465D	49714	4D0 505 547C	49729	4D0 505 548C	49715
4D0 511 523A	33941	4D0 511 523C	33941	4E0 407 151G	51737
4E0 407 151J	51737	4E0 407 151L	51737	4E0 407 181B	36771
4E0 407 183A	33932	4E0 407 693C	51738	4E0 407 693F	51738
4E0 407 694C	51739	4E0 407 694F	51739	4E0 407 694N	51739
4E0 407 695B	51738	4E0 411 317C	52711	4E0 411 317D	52711
4E0 411 317E	52711	4E0 419 811B	51735	4E0 419 811C	51735
4E0 419 811D	51735	4E0 419 811E	51735	4F0 407 151	52710
4F0 407 151A	52710	4F0 407 183A	36777	4F0 407 183B	33932
4F0 407 183C	36778	4F0 407 693	51874	4F0 407 693B	51874
4F0 407 693C	51874	4F0 407 693G	51874	4F0 407 694	51875
4F0 407 694B	51875	4F0 407 694C	51875	4F0 407 694G	51875
4F0 419 811C	59707OES	431 407 181F	33891	431 407 183A	33901

Die aufgeführten Vergleichsnummern dienen nur zur besseren Identifikation.
References are only specified for a better identification.
Les références mentionées ne servent qu' á une meilleure identification.

VAG	MAPCO	VAG	MAPCO	VAG	MAPCO
431 505 172	33808	431 511 247C	33898	437 407 155B	49698
443 407 151B	49698	443 407 152B	49699	443 419 811B	49717
443 419 811D	49717	443 419 812B	49718	443 419 812D	49718
443 505 351P	51870	443 505 352P	51871	443 511 523B	33941
535 411 315	19853HPS	6E0 419 811	51822	6E0 419 812	51823
6K0 411 315	51861	6K0 422 811	51822	6K0 422 812	51823
6N0 407 151	19686/1	6N0 407 151A	51819/1	6N0 407 151B	19686/1
6N0 407 175	19895/9	6N0 407 175A	19895/9	6N0 407 181	33835
6N0 407 182	33834	6N0 407 365	19895	6N0 407 365	19895/1
6N0 407 365A	19896/1	6N0 407 365A	19896	6N0 411 315	49862/1
6N0 411 315	49862	6N0 411 315A	51821	6N0 411 315C	49862
6N0 411 315C	49862/1	6N0 411 315D	51821	6N0 411 329	49862/9
6N0 419 803	19688	6N0 419 804	19689	6N0 419 812	19886
6N0 422 803	19696	6N0 422 803A	19696	6N0 422 804	19697
6N0 422 804A	19697	6N0 422 811	49871	6N0 422 812	49872
6N0 422 821A	19696/1	6N0 501 541D	33937	6Q0 407 151D	59813/2
6Q0 407 151D	59813	6Q0 407 151D	59813/1	6Q0 407 151E	59813
6Q0 407 151E	59813/1	6Q0 407 151E	59813/2	6Q0 407 151L	59813/1
6Q0 407 151L	59813	6Q0 407 151L	59813/2	6Q0 407 182A	36938
6Q0 407 183	36939	6Q0 407 183A	36939	6Q0 407 365A	59810
6Q0 407 365B	59810	6Q0 407 365M	59810	6Q0 407 366A	59811
6Q0 407 366B	59811	6Q0 407 366M	59811	6Q0 411 315A	59812HPS
6Q0 411 315B	59812HPS	6Q0 411 315C	59812HPS	6Q0 411 315D	59812HPS
6Q0 411 315E	59812HPS	6Q0 411 315F	59812HPS	6Q0 411 315G	59812HPS
6Q0 411 315J	59812HPS	6Q0 419 811C	59806	6Q0 423 803B	59808
6Q0 423 803C	59808	6Q0 423 803E	59808	6Q0 423 803G	59808
6Q0 423 804B	59809	6Q0 423 804C	59809	6Q0 423 804E	59809
6Q0 423 804G	59809	6Q0 423 810C	59808/1	6Q0 423 811	59806
6Q0 423 811A	59806	6Q0 423 811D	59806	6Q0 423 812	59807
6Q0 423 812A	59807	6Q0 423 812C	59807	6Q0 423 812D	59807
6R0 501 541A	33912	6U0 422 811	19961	6U6 407 359A	36780
6U6 407 360A	36781	6X0 407 151	51819/1	6X0 407 151A	51819
6X0 407 151A	51819/1	6X0 407 151A	51820	6X0 422 803A	59890
6X0 422 803Apart	59890/1	6X0 422 804A	59889	6X0 422 804Apart	59890/1
6X0 422 811	51822	6X0 422 812	51823	685 10 017	59852HPS
685 10 018	59853HPS	7D0 407 140	36784	7D0 407 140	33872
7D0 407 140A	33872	7D0 407 140A	36784	7D0 407 140B	36784
7D0 407 140C	36784	7D0 407 151A	59804	7D0 407 152A	59805
7D0 407 183	33916	7D0 407 183C	33916	7D0 407 361	49859
7D0 411 045	33926	7D0 411 049	49851	7E0 407 361	51721
7H0 407 361	51721	7H0 411 317	51718HPS	7H0 419 803C part	51722
7H0 419 804C part	51722	7H0 422 817A	51719	7H0 422 817B	51719
7H0 422 817C	51719	7H0 422 817D	51719	7H0 422 818A	51720
7H0 422 818B	51720	7H0 422 818C	51720	7H0 422 818D	51720
7H5 411 317	51718HPS	7H5 411 317A	51718HPS	7L0 407 021B	52716
7L0 411 317	51824	7L0 422 803B	51745	7L0 422 803C	51745
7L0 422 803D	51745	7L0 422 804B	51746	7L0 422 804C	51746
7L0 422 804D	51746	7L0 422 817B	51742	7L0 422 817C	51742
7L0 422 817D	51742	7L0 422 818B	51743	7L0 422 818C	51743

Die aufgeführten Vergleichsnummern dienen nur zur besseren Identifikation.
References are only specified for a better identification.
Les références mentionées ne servent qu' á une meilleure identification.

VAG	MAPCO	VAG	MAPCO	VAG	MAPCO
7L0 422 818D	51743	7L0 422 821D part	51744	7L0 505 465A	51733
7L0 505 465C	51733	7L0 505 465D	51733	7L0 505 466A	51734
7L0 505 466B	51734	7L0 505 466C	51734	7L0 505 466D	51734
7L8 407 151D	52714	7L8 407 151E	52714	7L8 407 152D	52715
7L8 407 152E	52715	7M0 407 151B	49876	7M0 407 152B	49877
7M0 407 181A	33928	7M0 407 365A	49861	7M0 411 317C	49856HPS
7M0 411 317D	49856HPS	7M0 411 517C	49856HPS	7M0 422 803F	49866/1
7M0 422 803F	49866	7M0 422 803G	49866/1	7M0 422 804F	49866/2
7M0 422 804G	49866/2	7M0 422 817A	49857	7M0 422 817B	49857
7M0 422 818	49858	7M0 422 818A	49858	7M0 422 818B	49858
7M0 501 541	33908	7M0 505 221B	33864	7M0 505 221C	33864
7M3 411 317	49856HPS	7M3 411 317C	49856HPS	7M3 422 803	49866/1
7M3 422 803A	49866/1	7M3 422 804	49866/2	7M3 422 804	49866
7M3 422 804 S1	49866	7M3 422 804A	49866/2	7M3 422 817	49857
7M3 422 818	49858	701 407 021B	49852	701 407 022B	49853
701 407 077	33913	701 407 077A	33913	701 407 087	33915
701 407 140B	33872	701 407 140C	33872	701 407 151A	49854
701 407 152A	49855	701 407 183	33914	701 407 183C	33916
701 407 187A	19868	701 407 187B	19868	701 407 361	19869
701 407 361B	19869	701 411 041	33925	701 411 041D	36940
701 411 049	49851	701 411 049B	49863	701 419 803D	49766
701 419 803E	49773	701 419 804D	49767	701 419 804E	49774
701 419 810B	49764	701 419 811	19866	701 419 811A	19859
701 419 811B	19866	701 419 811C	19873	701 419 811E	59814
701 419 812	19880	701 419 812A	19867	701 419 812B	19882
701 419 812D	59815	8A0 407 181	33842	8A0 407 365	19684
8A0 407 366	19685	8A0 407 465	19603HPS	8A0 501 541	33894
8A0 505 465C	49688	8A0 505 466C	49689	8D0 407 151F	49710OES
8D0 407 505B	49680OES	8D0 407 505F	49680OES	8D0 407 505H	49680OES
8D0 407 505K	49680OES	8D0 407 506B	49681OES	8D0 407 506F	49681OES
8D0 407 506H	49681OES	8D0 407 506K	49681OES	8D0 407 509C	49791OES
8D0 407 509E	49791OES	8D0 407 510C	49792OES	8D0 407 510E	49792OES
8D0 411 317D	49683OES	8D0 411 317D	49683/1OES	8D0 411 318D	49684OES
8D0 411 318D	49684/1OES	8D0 411 506K	49683OES	8D0 411 506K	49683/1OES
8D0 498 998	59822/1	8D0 498 998	59819	8D0 498 998	59819/1
8D0 498 998	59822	8D0 501 530	59893	8D0 501 541A	33988
8D0 501 541D	33902	8D0 505 465	49688	8D0 505 466	49689
8E0 407 151E	51710OES	8E0 407 151K	51710OES	8E0 407 151L	51710OES
8E0 407 151M	51710OES	8E0 407 151N	51710OES	8E0 407 151R	51710OES
8E0 407 505A	49680OES	8E0 407 506A	49681OES	8E0 407 509A	49791OES
8E0 407 510E	49792OES	8E0 407 693	49708OES	8E0 407 693AA	51872
8E0 407 693AD	51872	8E0 407 693E	49708OES	8E0 407 693T	51872
8E0 407 694	49709OES	8E0 407 694E	49709OES	8E0 411 317	52712
8E0 411 318	52713	8E0 419 811	59707OES	8E0 419 811B	49707HPS
8E0 419 811B	49707OES	8E0 422 821	49738	8E0 498 998	59827
8E0 498 998	59827/1	8E0 498 998S1	59827/1	8E0 498 998S1	59827
8E0 505 465C	59820	8E0 505 465D	59820	8N0 422 803A	51713
8N0 422 803C	51713	8N0 422 804A	51714	8N0 422 804C	51714
8N0 422 811A	51711	8N0 422 812A	51712	8Z0 411 315B	59894

Die aufgeführten Vergleichsnummern dienen nur zur besseren Identifikation.
References are only specified for a better identification.
Les références mentionées ne servent qu' á une meilleure identification.

VAG	MAPCO	VAG	MAPCO	VAG	MAPCO
8Z0 411 315C	59894	8Z0 423 803A	59892	8Z0 423 803C	59892
8Z0 423 803D	59892	8Z0 423 803F	59892	8Z0 423 804A	59891
8Z0 423 804C	59891	8Z0 423 804D	59891	8Z0 423 804F	59891
811 199 415A	33830	811 199 419B	33827	811 199 419C	33827
811 40 7147B	49768	811 407 181	33828	811 407 181A	33828
811 411 327A	33844	811 411 327B	33843	811 419 801C	49761
811 419 801E	49761	811 419 802J	49762	811 419 812	19850
811 419 812A	19890	811 419 812B	19890	811 511 247	33829
823 199 415B	33830	823 407 365A	19856	823 407 365C	19856
823 407 365E	19857	823 411 313A	33906	823 419 811	19850
855 407 365A	19893	855 407 365B	19893	855 407 366A	19894
855 407 366B	19894	857 407 147A	49769	857 407 181	33842
857 407 474	33907	861 407 151B	19854	861 407 183	33893
861 419 812	19850	871 419 801A	19899	871 419 802	49878
893 199 415	33830	893 199 419	33827	893 407 147C	49769/1
893 407 147C	49769	893 407 147E	49775	893 407 147G	49768
893 407 148A	49770	893 407 148A	49770/1	893 407 148C	49770/1
893 407 148C	49770	893 407 148E	49776	893 407 181	33846
893 407 365A	19898	893 407 365F	19680	893 407 366A	19897
893 407 366F	19681	893 407 465	19603HPS	893 407 465A	19603HPS
893 419 802	49763	895 407 147A	49705	895 407 147D	49705/1
895 407 148A	49706	895 407 148A	49706/1	895 407 148D	49706/1
895 407 365	19684	895 407 366	19685		

VAUXHALL	MAPCO	VAUXHALL	MAPCO	VAUXHALL	MAPCO
03 50603	49749HPS	0350 616	59026HPS	13 271996	59770
1603 215	19637	24 408 179	33717	26 010 028	19805
26 055219	19627	322 171	19615	322 172	19616
322 175	19613	322 176	19614	350 616	59026HPS
352 335	33757	352 822	19816	44 08474	49155
4500 094	36704	7840 452	19800	9 161 561	49125
9 161562	49137	9 161563	49138	90 157 161	33788
90 495 045	19607/8HPS	90 495 585	33720	90 496 116	19600HPS
90 498 738	33788	90250709	33714/9	90288082	33714/2
90288082	33714	90373264	33714	91 160037	49155
91 160498	49109HPS	91 160499	49108HPS	91 166461	49142
91 166462	49141	91166 461	49140	91166 462	49140
9191 165	33788	9191 309	33720	93 171448	36703
93 172 254	49620	93 172 255	49621	93 172 256	49622
93 179 558	49619	93 179 559	49618	93 181 233	49619
93 193 134	33577	93 193130	51253	93 193130	51254
93 193131	51254	93 193131	51252	93 194002	51251
93 194035	51250	93 195093	51255	94 459 464	49616
94 459453	49744	94 459465	49745	94 459480	49743
94 459481	49742	96 626667	51301	97 020954	49742

VOLVO	MAPCO	VOLVO	MAPCO	VOLVO	MAPCO
1205 658	19906	1206 667	19915	1228 386	49952
1228 799	19902	1228 800	19901	1229 391	19913
1273 126	49900	1273 139	19902	1273 140	19901

Die aufgeführten Vergleichsnummern dienen nur zur besseren Identifikation.
References are only specified for a better identification.
Les références mentionées ne servent qu' á une meilleure identification.

VOLVO	MAPCO	VOLVO	MAPCO	VOLVO	MAPCO
1273 143	19902	1273 146	19901	1273 235	33994
1273 819	19907	1329 655	33917	1330 819	19902
1330 820	19901	1330 821	19902	1359 347	49900
1359 590	19907	138 7356	49943	1387 463	49942
1387 860	19914HPS	27 419 1	49965	27 419 2	49966
27 435 1	49965	27 435 2	49966	27 435 3	49964
27 449 8	49965	27 449 9	49966	27 457 6	49965
27 458 2	49966	270 477	19907	271 389	49943
271 591	19912	271 598	19910	271 599	19911
271 628	49912	271 629	49913	271 631	36975
271 901	49912	271 902	49913	272 273	49914
272 336	49914	272 337	49915	272 428	49923
272 991	19937HPS	272 991	19937	274 118	19902
274 119	19901	274 175	49921	274 176	49922
274 179	49927	274 186	49924	274 193	49924
274 303	49906HPS	274 377	49955	274 456	49906HPS
274 523	49955	274 548	49924	274 573	49955
2772 274	49915	30 648 461	51621	30 666 105	59647
30 760 806	49965	30 760 807	49966	30 776 323	49965
30 776 324	49966	30 776 806	49965	30 870 695	19547
30 875 012	19547	306 66331	33678	306 66821	33678
3063 5227	49958	3063 5228	49959	3063 5229	49962
3063 5230	49963	3063 5231	49960	3063 5232	49961
3064 7920	49916HPS	3064 7995	19914HPS	3068 3232	51610
30683067	59668	3071 4126	51602	3071 4127	51603
3071 4422	51602	3071 4423	51603	3071 4466	51610
3071 4678	49916HPS	3071 4685	49906HPS	3071 4686	19914HPS
3073 6387	49960	3073 6388	49961	3076 0678	51625
3077 6248	51620	3077 6249	51619	3081 8078	59396
3081 8091	49956	3081 8096	59396	3081 8097	59397
3081 8467	33924	3082 1650	49907	3082 1650	49544
3082 1651	49908	3082 1651	49545	3085 2103	49909
3086 4208	49907	3086 4208	49544	3086 4209	49545
3086 4209	49908	30863990	49578	3087 1770	49905HPS
3087 2510	33551/1	3087 2511	33550/1	3087 3100	49905HPS
30870695	19540	3088 3988	49544	3088 3988	49907
3088 3989	49908	3088 3989	49545	3088 4179	49947HPS
3088 4179	49947	3088 4358	49905HPS	3088 4359	49909
3088 7025	49907	3088 7025	49544	3088 7033	49908
3088 7033	49545	3088 7469	49907	3088 7469	49544
3088 7470	49908	3088 7470	49545	3088 7653	49919
3088 7654	49920	3088 9962	49544	3088 9962	49907
3088 9963	49545	3088 9963	49908	30883989	49578
30887033	49578	30887470	49578	30889962	49578
31 200 776	51622	31 2007 75	51623	31 201 228	49965
31 201 229	49966	31 277 343	51622	31 277 344	51623
3120 1602	49906HPS	3121 2548	51610	3121 6292	49906HPS
3128 0000	51619	3128 0001	51620	3130 2344	51619
3130 2345	51620	3211 955	19874	3265 974	19874

Die aufgeführten Vergleichsnummern dienen nur zur besseren Identifikation.
References are only specified for a better identification.
Les références mentionées ne servent qu' á une meilleure identification.

VOLVO	MAPCO	VOLVO	MAPCO	VOLVO	MAPCO
3270 523	19909	334 2824	49944	3345 797	49910
341 0369	49928	341 0412	49944	3410 519	19909
3416 129	49901HPS	3416 130	49902HPS	3434 868	19903
344 3998	49925	344 3999	49926	3448 334	19908
3465 482	19909	3465 590	19909	3467 713	49901HPS
3467 714	49902HPS	3480 012	19908	3516 944	19906
3530 167	49952	3530 230	19913	3530 3049	19938
3530 388	33994	354 6266	49917	3546 267	19910
3546 268	19911	3546 524	19912	410 364	19908
410 369	49928	410 519	19909	6800 251	36976
6819 057	33923	6819 253	19937	6819 253	19937HPS
8416 130	49902HPS	862 3955	49958	862 3956	49959
862 8725	19914HPS	8623 957	49962	8623 958	49963
8623 960	49961	8623576	59664HPS	8626 031	19914HPS
8628 495	49912	8628 496	49913	8628 497	49914
8628 498	49915	8628 726	19914HPS	863 869	49916HPS
863 0604	33996	8634 736	49906HPS	864 9541	49958
864 9542	49959	8649 543	49962	8649 544	49963
8649 545	49960	8649 546	49961	8671921	59646
8672 445	49906HPS	8672 446	49916HPS	9140 504	49942
9140 767	19914HPS	9140 788	49918	9140 788F	49918
9140 995	19913	9157 725	19913	9169 080	49916HPS
917 3618	33995	919 1410	49954	944 3882	33995
946 1626	33996	946 5971	33995	949 2105	49958
949 2106	49959	9492 531	49913	9492 532	49914
9492 804	19914HPS	9492 837	19937HPS	9492 837	19937
9492 914	49912	9492 915	49913	9492 916	49914
9492 917	49915				

VW	MAPCO	VW	MAPCO	VW	MAPCO
1H0 419 821	52719	1H0 419 821A	52719	1J0 407 181	33903
1J0 407 181A	33903	1J0 411 314	33927	1J0 411 314S	33927
1J0 501 541C	33912/2	1K0 199 231G	36948	1K0 199 231J	36948
1K0 199 232G	36949	1K0 199 232J	36949	1K0 407 151AC	51726
1K0 407 151M	51726	1K0 407 152AC	51727	1K0 407 152AD	51727
1K0 407 182	36950	1K0 407 182 A	36950	1K0 407 183E	36939
1K0 407 365C	51724	1K0 407 365G	51724	1K0 407 366C	51725
1K0 407 366G	51725	1K0 411 315B	51825HPS	1K0 411 315D	51825HPS
1K0 411 315J	51825HPS	1K0 423 810A	51723	1K0 423 811A	51826
1K0 423 811C	51740	1K0 423 811G	51740	1K0 423 811H	51740
1K0 423 811J	51826	1K0 423 811K	51740	1K0 423 812A	51827
1K0 423 812C	51741	1K0 423 812D	51741	1K0 423 812E	51827
1K0 423 812G	51741	1K0 423 812H	51741	1K0 423 812J	51827
1K0 423 812K	51741	1K0 505 323D	52718	1K0 505 323G	52718
1K0 505 323H	52718	1K0 505 323M	52718	1K0 505 323N	52718
1K0423 811D	51740	191 411 315	49850	2E0 407 151M	52816
2E0 407 152M	52817	2E0 713 491	52811	2E0 713 491	52810
3C0 199 231A	33987	3C0 199 231B	33987	3C0 199 231D	33987
3C0 407 151A	52717	3C0 407 151B	52717	3C0 407 151E	52717
3C0 407 365A	51724	3C0 407 366A	51725	3C0 423 811B	51826

Die aufgeführten Vergleichsnummern dienen nur zur besseren Identifikation.
References are only specified for a better identification.
Les références mentionées ne servent qu' á une meilleure identification.

VW	MAPCO	VW	MAPCO	VW	MAPCO
357 407 365	19889/1	4B0 407 151	51730	4B0 419 811G	59707OES
4B0 419 811Q	59707OES	4B0 501 222D	36776	4B0 501 521D	36775
4B0 501 521E	36775	4B0 501 522E	36776	4B3 407 151A	51730
4B3 407 151C	51730	4B3 407 151K	51730	4B3 407 155A	51710OES
4B3 407 155C	51710OES	4D0 407 509B	49791OES	4D0 407 509D	49791OES
4D0 407 509F	49791OES	4D0 407 509G	49791OES	4D0 407 509H	49791OES
4D0 407 509J	49791OES	4D0 407 510B	49792OES	4D0 407 510D	49792OES
4D0 407 510F	49792OES	4D0 407 510G	49792OES	4D0 407 510H	49792OES
4D0 407 510J	49792OES	4D0 407 511F	49792OES	4D0 407 511F	49791OES
4D0 407 512F	49791OES	4D0 411 317G	49683/1OES	4D0 411 318D	49684/1OES
4D0 419 811J	59707OES	4D0 422 821A	49738	4E0 407 182B	36774
4E0 407 182C	36774	4E0 407 505B	51876	4E0 407 505E	51876
4E0 407 506B	51877	4E0 407 506E	51877	4E0 407 509B	51878
4E0 407 509E	51878	4E0 407 509G	51878	4E0 407 509K	51878
4E0 407 510B	51879	4E0 407 510E	51879	4E0 407 510G	51879
4E0 407 510K	51879	4E0 407 693N	51738	4E0 407 694N	51739
4E0 411 317C	52711	4E0 411 317D	52711	4E0 411 317E	52711
4E0 419 821C	51736	4F0 407 151	52710	4F0 407 151A	52710
4F0 407 693	51874	4F0 407 693B	51874	4F0 407 693C	51874
4F0 407 693G	51874	4F0 407 694	51875	4F0 407 694B	51875
4F0 407 694C	51875	4F0 407 694G	51875	4F0 419 811B	49707HPS
4F0 419 811C	59707OES	4F0 419 811D	59707OES	4F0 419 811E	49707HPS
4Z7 407 505A	49680OES	4Z7 407 506A	49681OES	6N0 407 151A	51819/1
6N0 419 811	19885	6N0 422 812	19886	6Q0 411 315 N	59812HPS
6U0 422 807	19973	6X0 407 151	51819/1	6X0 407 151A	51819/1
7H0 407 151E	51731	7H0 407 151F	51731	7H0 407 151G	51731
7H0 407 152E	51732	7H0 407 152F	51732	7H0 407 152G	51732
7L0 407 021	52716	7L0 407 021A	52716	7L0 407 021B	52716
7L0 407 151C	52714	7L0 407 151E	52714	7L0 407 151H	52714
7L0 407 152C	52715	7L0 407 152E	52715	7L0 407 152H	52715
7L0 422 803D	51745	7L0 422 804D	51746	7L0 422 817D	51742
7L0 422 818D	51743	7L0 422 821D part	51744	7L8 407 151D	52714
7L8 407 151E	52714	7L8 407 152D	52715	7L8 407 152E	52715
8D0 407 505C	49680OES	8D0 407 505K	49680OES	8D0 407 505L	49680OES
8D0 407 506B	49681OES	8D0 407 506C	49681OES	8D0 407 506D	49681OES
8D0 407 506E	49681OES	8D0 407 506F	49681OES	8D0 407 506H	49681OES
8D0 407 506K	49681OES	8D0 407 506L	49681OES	8D0 407 507E	49680OES
8D0 407 508E	49681OES	8D0 407 509A	49791OES	8D0 407 509C	49791OES
8D0 407 509E	49791OES	8D0 407 509F	49791OES	8D0 407 509G	49791OES
8D0 407 510A	49792OES	8D0 407 510C	49792OES	8D0 407 510E	49792OES
8D0 407 510F	49792OES	8D0 407 515A	36773	8D0 407 515B	36773
8D0 407 515C	36773	8D0 411 318D	49684OES	8E0 407 505C	49680OES
8E0 407 506A	49681OES	8E0 407 506C	49681OES	8E0 407 509A	49791OES
8E0 407 509C	49791OES	8E0 407 510A	49792OES	8E0 407 510C	49792OES
8E0 407 693AA	51872	8E0 407 693AC	51872	8E0 407 693AG	49708OES
8E0 407 693AJ	51872	8E0 407 693AK	51872	8E0 407 693AL	51872
8E0 407 693N	51872	8E0 407 693T	51872	8E0 407 694AA	51873
8E0 407 694AC	51873	8E0 407 694AG	49709OES	8E0 407 694AJ	51873
8E0 407 694AK	51873	8E0 407 694AL	51873	8E0 407 694N	51873

Die aufgeführten Vergleichsnummern dienen nur zur besseren Identifikation.
References are only specified for a better identification.
Les références mentionées ne servent qu' á une meilleure identification.

VW	MAPCO	VW	MAPCO	VW	MAPCO
8E0 407 694T	51873	8E0 411 317	52712	8E0 411 318	52713
8E0 419 811	59707OES	8E0 501 521N	36775	8E0 501 522N	36776
8N0 407 181B	36772	811 411 327B	33843	893 411 327E	33843

Die aufgeführten Vergleichsnummern dienen nur zur besseren Identifikation.
References are only specified for a better identification.
Les références mentionées ne servent qu' á une meilleure identification.

FEBI BILSTEIN	MAPCO	FEBI BILSTEIN	MAPCO	FEBI BILSTEIN	MAPCO
TC2052	59628HPS	01022	36661	01023	36662
01032	19699	01034	19698	01071	49662
01078	49661	01084	33889/3	01121	19862
01127	19863	01146	49672	01147	49673
01150	19876	01158	19879/1	01163	19860
01169	19861	01172	33858	01196	33826/4
01199	33833/2	01201	33871/4	01209	59898
01220	33858/2	01303	36972	01304	36923
01305	33836	01311	33616	01312	33617
01433	49802	01521	19893	01522	19894
01523	36904	01529	33896	01530	33897
01665	49801	01668	33666	01673	33697
01677	33692	01678	33693/2	01691	33693
01712	51850	01713	19836	01791	51800
01792	51801	01795	19881	01800	19870
01808	19756/2	01809	19756/3	01810	19755/2
01811	19755/3	01831	19813	01837	33714
01838	33725	01847	49657	01852	19812
01854	49759	01855	49758	01880	19686/1
01926	33901	01932	33846	01952	33974
01989	33922	01995	19624	02008	33733
02014	33793	02042	49754	02043	49755
02045	19808	02046	19809	02047	33879
02051	19801	02052	19680	02053	19681
02057	19684	02058	19685	02070	33732
02098	19820	02099	19819	02106	19883
02107	19884	02109	19818	02110	19817
02128	33731	02145	19888	02146	19892
02183	33848	02220	19852	02221	19851
02223	33715	02234	19850	02236	19899
02237	49878	02238	19878	02240	19891/1
02243	19856	02244	19857	02263	33849
02266	49761	02267	49762	02268	19890
02271	19621	02273	33737	02287	19887
02289	51806	02354	33870	02379	19847
02380	19828	02381	19845	02383	19849
02384	19848	02385	19831/1	02386	19830/1
02395	33913	02408	19875	02497	36971
02498	33978	02620	19714	02624	19805
02625	19800	02627	19710	02628	19711
02629	59367	02633	59295	02634	59296
02635	19718	02636	19719	02672	19806
02673	19807	02682	33691	02734	49844
02818	19858	02818	19858/2	02891	19839
02901	33841	02912	19620	02915	19619
02940	49896	02941	49897	02942	19889
02957	19721	02959	19727	03091	33716
03141	33752	03142	33757	03388	49846
03389	49845	03461	33906	03544	33818/9

Die aufgeführten Vergleichsnummern dienen nur zur besseren Identifikation.
References are only specified for a better identification.
Les références mentionées ne servent qu' á une meilleure identification.

FEBI BILSTEIN	MAPCO	FEBI BILSTEIN	MAPCO	FEBI BILSTEIN	MAPCO
03548	19889/1	03551	19897	03553	19898
03583	19877	03607	19854	03664	33871
03665	33826	03668	19844	03670	19838
03671	33833	03822	19665	03825	19666HPS
03825	19666/1	03883	19606HPS	03885	33730
04011	19746/1	04037	33641/2	04038	33641
04094	19747/1	04181	33690	04220	19667HPS
04250	33729	04305	33785	04306	33786
04390	33787	04402	33895	04407	33736
04419	19717	04421	49717	04422	49718
04443	33739	04451	19891	04452	19874
04585	19678HPS	04786	19837	04874	19834
04882	49892	04888	33898	04911	33689
04913	33914	04919	19833	04936	19895
04942	19840	04943	19841	04944	19896
05021	49815	05022	49816	05023	49817
05027	33915	05040	49818	05052	33865
05053	33874	05059	33929	05115	59831
05162	19602HPS	05170	19802	05170	19612
05191	19803/1	05193	19804/1	05194	19618
05195	19617	05198	49752	05199	49753
05200	19611	05201	19610	05202	49604
05217	33917	05218	19832	05269	49821
05271	49822	05290	33916	05388	33867
05399	33971	05622	33645	05623	19743/1
05624	19744/1	05639	19755/1	05640	19756/1
05666	19768	05682	19654	05747	49788
05841	33972	05920	19761	05921	19760
05952	19842	05953	19843	06043	33639
06048	33695	06157	49756	06158	49757
06170	33611	06172	33627	06179	33677
06183	19725	06191	19614	06192	49601
06192	19616	06193	49600	06193	19615
06194	19613	06195	49760	06213	33638
06225	36770	06301	19736	06302	19735
06353	33936	06400	19816	06467	49813
06490	19701	06557	19656	06558	19657
06559	33820	06595	19829	06625	19663
06628	49782	06629	49783	06636	49785
06639	49786	06641	19664	06660	33875
06661	33875/1	06667	36899	06676	33910
06766	33900	06792	49733	06793	49734
06935	19108	06936	19130	06937	19130/1
06938	19137	06942	19138	06943	19147
06947	19148	06953	19150	06956	19151
06957	19153	06958	19154	06964	19133
06966	19134	06968	19131	07059	33835
07180	33830	07182	33827	07197	36926
07200	33946	07222	33637/2	07224	33847

Die aufgeführten Vergleichsnummern dienen nur zur besseren Identifikation.
References are only specified for a better identification.
Les références mentionées ne servent qu' á une meilleure identification.

FEBI BILSTEIN	MAPCO	FEBI BILSTEIN	MAPCO	FEBI BILSTEIN	MAPCO
07238	19846	07239	59897	07248	49787
07258	49898	07259	49899	07512	19673
07513	19674	07538	33891	07557	33828
07558	33842	07590	33859	07601	36924
07620	33829	07622	33899	07623	33808
07629	33892	07701	33893	07729	33727
07778	19822	07779	19825	07780	19823
07781	19827	07781	19824	07782	19826
07837	33909	07843	33609	07847	33818
07855	19879	07856	33819	07861	33890
07863	49850	07954	19757	07965	19670HPS
07966	19671HPS	07973	19758	07977	19679
07979	19872	07984	19682	07989	19608HPS
07989	19604HPS	07990	19683	08030	19871
08038	19821	08051	49874	08052	49873
08053	19865	08054	19864	08078	49891
08084	19738/1	08095	19737/1	08096	19753
08097	19752	08107	19756/5	08144	33795
08156	33734	08167	19640	08169	19641
08204	49847	08212	49848	08322	49880
08323	49849	08428	36925	08561	33841/4
08570	19662	08571	19661	08572	49780
08574	19660	08575	49781	08580	49730
08581	19675	08582	19669	08583	19668
08683	33868	08761	19722	08767	19745
08768	19655	08780	19646	08818	33973
08828	49826	08842	33970	08858	33694
08863	49827	08905	36912	08920	49795HPS
08925	49660	08940	33942	08941	36908
08942	33889/4	08944	33889/2	09005	36669/2
09047	33937	09054	33894	09058	33307
09060	33834	09070	33306	09086	36941
09095	49862/9	09113	19626	09115	49800
09118	33615	09119	33614	09137	33618
09146	33100	09194	49889	09206	19600HPS
09209	33610	09315	19157	09316	19158
09317	19301	09373	33320	09380	33143
09381	33144	09386	33148	09387	33147
09395	33171	09396	33170	09398	33338
09474	33726	09484	19723	09519	33904
09523	49705	09524	49706	09525	49775
09526	49776	09527	49769	09528	49770
09529	19690/1	09530	49664	09531	49665
09679	19142	09680	19141	09681	19139
09682	19140	09683	19144	09684	19145
09685	19136	09691	19143	09741	33146
09808	49893	09816	33643	09886	19135
10018	33839	10019	33876	10020	33840
10021	33928	10022	33939	10023	33940

Die aufgeführten Vergleichsnummern dienen nur zur besseren Identifikation.
References are only specified for a better identification.
Les références mentionées ne servent qu' á une meilleure identification.

FEBI BILSTEIN	MAPCO	FEBI BILSTEIN	MAPCO	FEBI BILSTEIN	MAPCO
10024	49674	10025	49675	10026	33864
10035	49725HPS	10035	49725	10036	49726HPS
10036	49726	10037	49796	10038	49663HPS
10110	59658	10123	19310	10127	19311
10150	33130	10151	33129	10159	19750
10160	49644	10161	19749	10162	19751
10163	19748	10165	19645	10167	19647
10168	49737	10169	19132	10170	19644
10210	19756/4	10211	19755/4	10268	49888
10269	49890	10277	33337	10303	33101
10304	33102	10307	33321	10324	19605HPS
10356	36911	10379	36916	10382	49641
10383	49640	10404	36917	10431	33714/9
10516	19607	10517	19607/8HPS	10521	33637
10569	19050	10570	19051	10571	19066
10572	19067	10573	19057	10574	19056
10577	19868	10578	19869	10579	59816
10582	19873	10583	19882	10584	19867
10585	19866	10586	19880	10587	19859
10590	59657	10591	59665	10640	19109
10657	19341	10658	19342	10659	19417
10660	19418	10662	19694	10663	19695
10790	19047	10791	19053	10792	19052
10793	19042	10796	49804	10797	49803
10800	33878	10814	33903	10852	33872
10876	19178	10877	19177	10883	49767
10884	49766	10885	49774	10886	49773
10887	59815	10888	59814	10890	19186
10891	19187	10894	19196	10895	19197
10900	19420	11022	49812HPS	11023	49811HPS
11091	49704	11136	33838	11137	49680OES
11138	49681OES	11152	33979	11153	36910
11155	36909	11192	33977	11277	19442
11278	19441	11279	19065	11280	19078
11280	19430	11281	19447	11282	19043
11283	19068	11284	19422	11350	49710OES
11351	49709OES	11352	49708OES	11353	49707HPS
11354	49732	11400	19160	11401	19159
11406	19156	11407	19161	11417	19312
11417	19415	11422	19339HPS	11423	19337HPS
11500	33675	11656	19623	11657	19622
11658	19635	11659	19636	11660	19633
11661	19634	11662	33788	11663	33794
11746	19632	11751	19330	11752	19329
11753	19345	11754	19344	11755	33318
11756	33314	11759	33319	11777	33313
11777	33415	11782	33330	11784	19421
11814	49739	11815	49740	11816	49741
11817	49721	11818	49722	11819	49650

Die aufgeführten Vergleichsnummern dienen nur zur besseren Identifikation.
References are only specified for a better identification.
Les références mentionées ne servent qu' á une meilleure identification.

FEBI BILSTEIN	MAPCO	FEBI BILSTEIN	MAPCO	FEBI BILSTEIN	MAPCO
11820	49651	11821	49694	11822	49695
11829	19425	11831	19023	11847	19409
11850	19428	11851	19315	11853	19353
11854	19336/1	11855	19316	11856	19336
11864	37838	11873	49884	11874	49883
11933	33933	11958	49807	11959	49805
11960	49806	11977	19054	11978	19055
11988	19732	11996	49866/2	11997	49866/1
11998	49858	11999	49857	12001	49866
12002	49856HPS	12017	33103	12018	33115
12023	19450	12024	19449	12025	19448
12040	19022	12041	19079	12042	19431
12043	19432	12044	19076	12045	19077
12045	19434	12059	19072	12060	19073
12064	19363	12077	19906	12096	33009
12150	33105	12152	19469	12153	19468
12159	33168	12160	33172	12164	33164
12194	49836	12195	49837	12196	49831
12197	49830	12198	49833	12240	19166
12240	49107	12244	33005	12291	19071
12299	51647	12372	33167	12373	33118
12378	49723	12379	49724	12380	49658
12383	19463	12384	19464	12385	19461
12386	19462	12420	49129	12421	49130
12422	49101	12422	19181	12422	19170
12423	19180	12423	19169	12423	49100
12427	33329	12444	19164HPS	12444	19164
12472	33015	12473	49018	12474	49017
12528	49676/1	12529	49677/1	12530	49825
12537	49022	12538	49023	12539	49024
12540	49025	12546	19045	12547	19046
12555	19070	12556	19007	12557	19008
12558	19010	12559	19009	12560	19021
12561	19020	12565	49823	12566	49824
12567	19740	12571	19452	12574	19742
12575	19741	12576	36668/2	12577	36668
12580	49652	12581	59619	12582	59620
12620	49727	12621	49728	12626	36664
12627	36666	12628	36665	12638	19762
12658	49702	12660	49703	12677	49646
12678	49645	12683	49735	12684	49736
12696	49653	12697	49654	12699	19785
12700	59621	12718	19907	12719	49943
12720	19908	12723	49900	12725	49952
12726	49917	12727	49944	12728	49928
12729	49942	12730	19909	12747	19910
12748	19911	12758	19015	12759	19023
12763	33432	12764	33430	12768	19026HPS
12778	19631	12779	19637	12779	19638

Die aufgeführten Vergleichsnummern dienen nur zur besseren Identifikation.
References are only specified for a better identification.
Les références mentionées ne servent qu' á une meilleure identification.

FEBI BILSTEIN	MAPCO	FEBI BILSTEIN	MAPCO	FEBI BILSTEIN	MAPCO
12780	49607	12796	19556	12797	19525
12798	19523	12800	19649	12801	19648
12835	19724	12840	19366	12904	19583
12905	19589	12906	19584	12907	19594
12908	49583	12909	49582	12911	19566
12912	59273	12913	19560	12914	19951
12923	19954	12924	19955	12927	33960
12931	49571	12932	49570	12933	19563
12933	19571	12935	59563	12937	59201
12938	49595	12940	49562	12941	49561
12944	19956	12945	19505	12946	19504
12949	59317	12950	59320	12951	19983
12952	19980	12957	49539	12958	49538
12959	49523	12960	49522	12961	49527
12962	49526	12963	19982	12969	49606
12970	19981	14106	49743	14107	49742
14117	49744	14118	49745	14122	59681
14123	59680	14134	49750	14135	49751
14137	59865	14139	59866	14140	59867
14146	33844	14147	19585	14148	49768
14149	49535	14150	49534	14151	49521
14152	49520	14152	49536	14154	33902
14167	49589	14168	49691	14170	49690
14172	49870	14174	49869	14180	49700
14182	49701	14184	59895	14186	59896
14226	49820	14227	49819	14230	19853HPS
14231	33635	14232	33636	14235	19048
14243	19643/1	14244	19642/1	14245	19643
14246	19642	14252	19895/9	14276	36852
14279	49866/2	14300	19914HPS	14301	19937
14301	19937HPS	14306	19885	14310	49713OES
14318	19688	14320	19689	14322	49871
14324	49872	14324	19886	14326	19696
14328	19697	14396	33909/4	14424	19895/1
14426	19896/1	14428	19679/1	14440	49702/1
14444	49703/1	14522	49808	14523	49809
14548	33766	14549	33753	14558	19639
14603	19406	14605	19408	14718	33824
14739	33672	14753	49980	14755	19902
14756	19901	14758	19912	14759	49912
14760	49913	14834	19407	14891	33923
14897	36796	14899	36973	14913	49918
14923	33934	14944	33845	14949	33165
14953	36913	15068	19554	15069	19555
15070	19553	15071	19552	15072	19551
15073	59224	15074	49256	15151	49914
15152	49915	15169	19521	15266	19534
15267	19533	15268	19524	15269	59520
15270	19535	15272 01	19549	15273	19548

Die aufgeführten Vergleichsnummern dienen nur zur besseren Identifikation.
References are only specified for a better identification.
Les références mentionées ne servent qu' á une meilleure identification.

FEBI BILSTEIN	MAPCO	FEBI BILSTEIN	MAPCO	FEBI BILSTEIN	MAPCO
15300	59310	15399	19629	15400	19630
15401	33924	15402	19547	15403	49910
15410	49682	15411	19591HPS	15412	19590HPS
15413	19592HPS	15414	19543HPS	15415	49525HPS
15420	49524	15421	51526	15424	36976
15425	19527HPS	15426	36975	15455	49507
15465	49531	15467	49530	15471	49509
15473	49508	15477	49512	15478	49511
15488	49210	15489	49209	15495	19507
15500	19503	15501	19501	15535	49506
15539	19509	15541	19508	15553	59509
15553	49503	15555	59508	15555	49502
15563	49814/1	15564	49814/2	15568	49206
15569	49205	15620	33735	15677	49905HPS
15678	51819/1	15681	19652	15682	19651
15694	49828	15695	49829	15725	49901HPS
15726	49902HPS	15727	19915	15768	49044
15769	49045	15885	19044	15951	19347
15952	19346	15977	19321	15978	33935
15979	19322	15980	33948	15981	19320
15982	33949	15983	19319	15984	36914
15996	49865	15998	49860	17006	51822
17008	51823	17039	33016	17057	19520
17059	19580	17061	51539	17071	51538
17114	59854	17115	59855	17118	19759
17119	19754	17129	19338HPS	17136	59615
17137	59616	17201	49529	17203	49528
17207	49841HPS	17208	49840HPS	17214	49684OES
17214	49684/1OES	17216	49683OES	17216	49683/1OES
17300	59830/1	17318	49028	17319	49029
17376	33877	17377	19700HPS	17452	33758
17453	33756	17502	59211	17504	59217
17505	19519	17506	19518	17564	49882
17565	49881	17573	49886	17595	59667
17596	19913	17609	19324	17611	19335
17611	19340	17612	19476HPS	17618	33642
17621	49869	17622	49870	17631	19587
17676	49763	17702	19973	17703	36919
17704	19961	17713	19389	17715	19473
17722	19331/1	17722	19437	17722	19331
17722	19474	17723	19427	17724	19426
17725	19438	17725	19475	17725	19332
17725	19475/1	17725	19332/1	17729	33789
17730	33761	17751	19382	17753	19381
17766	19411	17768	19373	17777	19627
17778	19628	17779	49799	17781	33417
17786	19349	17787	19350	17790	33322
17817	33424	17837	33521	17839	33225
17923	19650	17968	19367	17969	19348HPS

Die aufgeführten Vergleichsnummern dienen nur zur besseren Identifikation.
References are only specified for a better identification.
Les références mentionées ne servent qu' á une meilleure identification.

FEBI BILSTEIN	MAPCO	FEBI BILSTEIN	MAPCO	FEBI BILSTEIN	MAPCO
17993	49065	17994	49064	18062	19763
18073	33943	18074	33944	18075	37837
18076	19780	18077	19781	18084	19603HPS
18101	19575	18103	19576	18105	49579HPS
18107	19573	18109	19578	18110	19577
18123	49609	18125	49608	18129	19765
18130	19653	18133	19574	18134	49271HPS
18135	49270HPS	18143	59638	18165	49843
18177	33316	18179	33317	18179	33336
18183	33520	18214	19030	18215	19029
18216	49031	18264	49868	18266	49867
18268	49030HPS	18281	19405	18299	36947
18315	33303	18343	33333	18366	49862/1
18424	19485	18425	19486	18427	19451HPS
18492	33941	18495	33676	18501	49877
18503	49876	18539	29795	18548	33796
18552	33768	18654	49863	18686	36660
18740	49859	18751	33327	18830	33814
18842	33878/9	18874	33947	18876	33628
18901	59622	18984	49851	18985	19368HPS
19009	33416	19022	49685OES	19042	33945
19044	33815	19048	33326	19050	33905
19067	19370HPS	19071	19369HPS	19117	19365
19120	19454	19121	19453	19124	33437
19222	19470	19225	19362HPS	19235	19593HPS
19236	49591HPS	19237	49590HPS	19237	49590
19244	34053	19276	49861	19279	19609HPS
19296	49793	19298	49794	19299	19601
19333	49895HPS	19333	49895	19336	51711
19342	51712	19379	49906HPS	19383	19374
19387	49510	19397	19375HPS	19399	49909
19403	19376HPS	19406	59810	19408	59811
19449	33670	19452	33644	19468	19371
19469	19028HPS	19518	59812HPS	19525	19171
19541	49610	19545	19810	19562	49839
19604	49136	19605	49135	19649	49120
19649	49120HPS	19650	49121HPS	19650	49121
19651	19777	19664	49916HPS	19665	59623HPS
19666	59631HPS	19667	59603HPS	19667	59603
19668	59604HPS	19668	59604	19669	59628HPS
19670	59632	19671	59605HPS	19673	49907
19673	49544	19674	49908	19674	49545
19685	59857	19685	59857HPS	19686	49200HPS
19716	19429HPS	19720	19607/8HPS	19721	19659HPS
19729	33527	19731	19360	19733	19361
19760	51870	19762	51871	19812	59806
19814	59807	19816	59808	19818	59809
19820	49704/1	19822	49704/2	19825	19773HPS
19830	59648	19831	19313	19833	19314

Die aufgeführten Vergleichsnummern dienen nur zur besseren Identifikation.
References are only specified for a better identification.
Les références mentionées ne servent qu' á une meilleure identification.

FEBI BILSTEIN	MAPCO	FEBI BILSTEIN	MAPCO	FEBI BILSTEIN	MAPCO
19841	59847HPS	19849	19984	19850	19985
19857	51613	19858	51614	19859	51615
19861	59861	19861	59861HPS	19864	59859
19865	59860	19866	49108HPS	19867	49109HPS
19873	59669	19874	59670	19875	49642
19877	49643	19879	59666	19926	36915
19927	19479	19932	51730	19935	19379
19937	49400	19939	19380	19959	49042
19961	49041	19963	49040	19965	49043
19980	19702	19987	49569	19989	49568
19991	49273	19993	49272	21015	49124HPS
21017	19776HPS	21019	19775HPS	21019	19775
21021	19774HPS	21021	19774	21044	49118HPS
21044	49118	21077	59613HPS	21124	33791
21132	33836	21174	59864	21182	59617
21183	59618	21194	33932	21196	49708OES
21204	49032HPS	21205	49033	21206	49034
21219	36987	21250	33324	21252	19769
21256	59856	21258	19031	21260	19032
21262	59845	21281	19701/1	21282	19702/1
21283	49143	21284	49144	21332	33720
21356	59858HPS	21357	59833	21358	59834
21402	59846	21410	33883	21414	49921
21415	49922	21425	59637	21439	59885
21440	59884	21441	59881	21442	59882
21443	51835	21444	51836	21445	51852
21446	51853	21450	49838	21453	49923
21455	59608	21456	59609	21483	51663
21484	51664	21485	51661	21486	51662
21487	51660	21488	59692	21489	59693
21490	19372	21491	19489	21492	19490
21493	49137	21494	49138	21495	59690
21496	59691	21500	59819	21513	59629
21514	59630	21530	36988	21611	33001
21613	33006	21620	59606	21621	59607
21635	49146HPS	21635	49146	21637	59832
21638	59899	21674	59645	21675	59644
21681	59650	21682	59651	21739	59633
21740	59634	21781	59671	21799	52801
21801	52800	21808	59226HPS	21810	19120HPS
21811	19538	21812	19539	21820	33422
21840	59707OES	21841	36689	21849	59672
21850	33434	21852	37836	21855	33629/2
21874	51336	21875	51334HPS	21876	51335HPS
21904	49791OES	21906	49792OES	21914	33420
21915	33420	21920	52712	21922	52713
21924	52712	21926	52713	21928	51710OES
21940	33925	21942	33926	21953	49037
21955	49036	21968	36838	21999	59643

Die aufgeführten Vergleichsnummern dienen nur zur besseren Identifikation.
References are only specified for a better identification.
Les références mentionées ne servent qu' á une meilleure identification.

FEBI BILSTEIN	MAPCO	FEBI BILSTEIN	MAPCO	FEBI BILSTEIN	MAPCO
22020	19477	22021	19478	22022	19491
22044	49707HPS	22075	59845	22100	19433
22132	49132	22133	49131	22134	49128
22135	49127	22136	33646	22137	33647
22140	59673	22141	36989	22169	49104
22233	49105	22234	49106	22239	33996
22265	49140	22267	19498	22269	19499
22271	33425	22273	33426	22279	49116
22289	33128	22307	33433	22337	49841HPS
22371	19903	22379	49749HPS	22384	19384
22385	19383	22390	49947HPS	22390	49947
22406	59640	22408	59664HPS	22410	19109/2
22417	52802	22418	52803	22463	59388HPS
22465	51332HPS	22468	49111	22469	59641
22470	59642	22473	59694	22476	49119
22477	49103	22479	49126	22481	59614HPS
22482	59695	22491	49102	22506	19127
22507	19128	22509	19182	22511	19195
22513	19189	22514	19190	22517	49117/1
22519	19183	22531	19193	22587	59904
22588	59901HPS	22612	59873	22613	59872
22614	59841	22615	59840	22620	59844
22633	19385	22635	33335	22636	33334
22659	37833	22661	33837	22662	36921
22665	36920	22670	37832	22678	36922
22684	19419	22699	33678	22705	49084
22706	49085	22707	49086	22708	49087
22710	49110	22740	49919	22741	49920
22747	59358	22750	59359	22763	51117/1
22765	49145	22767	59663	22787	19390
22788	19391	22797	49954	22798	49954
22801	49597	22802	49598	22818	33120
22819	33119	22821	33121	22822	33122
22823	59376	22824	59377	22825	49141
22839	59862	22846	19396	22847	19397
22861	59661	22862	59662	22872	19472
22873	19471	22907	49057	22909	49058
22913	49289	22915	49287	22917	59801
22919	59802	22939	33994	22947	49551
22949	49550	22959	49072	22965	59375
22967	59374	22969	51555	22971	51554
22982	36776	22984	36775	22993	51597
22993	51597HPS	23001	49623	23002	49624
23003	36703	23019	49927	23023	19567
23030	51821	23033	59376	23033	59876
23034	59877	23035	59878	23047	59646
23051	33633	23051	33633/1	23053	33632/1
23053	33632	23055	59535HPS	23087	59843
23107	59568	23109	59564	23125	33671

Die aufgeführten Vergleichsnummern dienen nur zur besseren Identifikation.
References are only specified for a better identification.
Les références mentionées ne servent qu' á une meilleure identification.

FEBI BILSTEIN	MAPCO	FEBI BILSTEIN	MAPCO	FEBI BILSTEIN	MAPCO
23133	33674	23135	33673	23143	49068
23145	49067	23148	59396	23149	59397
23161	49027	23163	49026	23167	49060
23169	49061	23171	49226HPS	23175	19572
23215	51833	23216	51832	23217	59874
23219	59874	23221	49894	23229	59602
23234	49274HPS	23243	49552	23244	19561
23245	19562	23246	59335	23247	59236
23257	51600HPS	23259	51601	23313	49233
23323	19392	23325	19393	23336	51721
23343	49924	23347	49958	23349	49959
23351	49962	23353	49963	23364	36784
23375	49232	23405	33431	23417	51834
23424	36940	23474	36782	23515	59251
23516	59250	23575	49280HPS	23577	49281HPS
23579	49285	23583	59272	23583	59268
23585	59276	23589	59567	23603	49566
23605	49567	23629	51380	23630	51381
23635	51577HPS	23636	59363HPS	23641	59560
23643	59561	23645	59294	23687	59849
23688	19811HPS	23714	19516	23715	59534
23724	19529HPS	23731	59368	23732	59369
23753	19558HPS	23797	49614	23798	49615
23819	19957	23888	49655	23889	49656
23923	19784	23924	19785	23925	59624
23935	59601	23936	59600	23939	51854
23940	51855	23952	59611	23953	59612
23962	51856	23963	51857	23964	51858
23965	51859	23995	49150	23996	49151
24016	49227HPS	24023	51340	24024	51341
24083	49133	24084	49134	24122	51825HPS
24211	59668	24212	37834	24242	33995
24245	33762	24251	49152	24252	49153
24262	36704	24263	36705	24297	49678
24298	49679	24339	49258	24339	49258/1
24340	49257/1	24340	49257	24377	19658
24390	36950	24545	51837	24546	51838
24575	52805HPS	24577	52804HPS	24623	51644
24625	51645	24632	59902	24720	49149
24753	33792	24800	59827	24802	59827/1
24802	59825/1	24802	59824/2	24815	49147
24816	49148	24900	59826	24902	59826/1
24903	59379	24904	59378	24905	59355HPS
24905	59355	24906	59351	24906	59351HPS
24907	49255	24909	19512	24910	59719
24911	59553	24912	59366	24913	59365
24914	59573	24915	49253	24916	33631
24918	33630	24922	49254HPS	24924	49251HPS
24925	49250HPS	24926	51204	24927	51203

Die aufgeführten Vergleichsnummern dienen nur zur besseren Identifikation.
References are only specified for a better identification.
Les références mentionées ne servent qu' á une meilleure identification.

FEBI BILSTEIN	MAPCO	FEBI BILSTEIN	MAPCO	FEBI BILSTEIN	MAPCO
24931	49264	24932	49265	24939	59500
24940	59501	24944	59502HPS	24944	59502
24945	59503HPS	24953	59242	24954	59241
24956	59515	24961	59243	24962	59244
24970	49214	24971	49213	25173	19355
25173	19354	25184	49862	25188	51805
25231	19307	25268	19692	25270	19693
25272	49714	25274	49790	25276	59893
25278	49686	25280	49715	25282	49729
25290	49789	25334	19962	26000	51837
26038	51843	26039	51842	26045	51723
26078	51659	26082	51724	26083	51725
26085	49237	26085	49237HPS	26096	51826
26097	51827	26098	59892	26099	59891
26119	59838	26127	33428	26128	33427
26130	51646	26132	59639	26152	49620
26153	49621	26186	59203	26192	33427
26208	51652	26277	51527	26278	51528
26304	33124	26344	33927	26432	49622
26519	59586	26520	51575	26535	36772
26588	59582HPS	26589	51209	26597	51561
26598	51560	26601	59574	26633	51642HPS
26634	51643HPS	26635	49618	26636	49619
26645	49082	26646	49083	26662	49290
26663	49291	26736	51568	26737	51573
26754	49062	26755	49063	26758	51841
26759	51840	26792	51300	26794	51298
26795	51299	26796	51292	26841	59580
26862	33551/1	26863	33550/1	26917	59292
26918	59291	26919	59361HPS	26920	59362HPS
26999	59715	27000	59714	27010	51874
27012	51875	27066	51847	27069	36948
27071	36949	27073	49612	27074	49613
27076	51726	27078	51727	27150	19510
27158	51667	27159	51668	27193	51650
27195	51639	27195	51639HPS	27196	51640HPS
27198	51641HPS	27199	51657	27200	51658
27204	59626	27210	51638	27212	51630
27213	51631	27232	51531	27240	19513
27260	51567	27262	51391	27264	51879
27265	51878	27286	51377HPS	27287	51374HPS
27299	51610	27301	49155	27331	51371
27332	51372	27333	51588	27334	51589
27335	51379HPS	27336	51378HPS	27337	49259
27338	51373HPS	27359	51520	27360	51521
27414	59026HPS	27421	59021	27422	59020
27424	19395	27427	19493	27428	49314
27432	19484	27433	49066HPS	27434	49304HPS
27435	49305HPS	27438	49308	27441	49295

Die aufgeführten Vergleichsnummern dienen nur zur besseren Identifikation.
References are only specified for a better identification.
Les références mentionées ne servent qu' á une meilleure identification.

FEBI BILSTEIN	MAPCO	FEBI BILSTEIN	MAPCO	FEBI BILSTEIN	MAPCO
27442	49296	27446	33127	27447	49160
27453	33123	27462	51522	27463	51582
27463	51281	27464	51282	27484	36771
27489	49303	27502	51877	27503	51876
27513	49297	27514	51290HPS	27515	51291HPS
27530	59813	27539	33173	27716	51654
27718	51665	27719	51666	27725	49194
27749	51655	27750	51656	27805	51382
27808	59267	27810	59293	27811	59572
27813	59556	27834	51718HPS	27864	59820
27867	52711	27897	51621	27926	19550
27928	59307	27967	59214	27981	59540HPS
27982	51861	27983	19544	27984	51861
27985	59546	27986	59547	27989	51543
27990	51544	28000	51255	28044	19559HPS
28045	49298HPS	28046	49268HPS	28047	49269HPS
28048	49201	28049	49202	28052	51541HPS
28056	51251	28058	49602	28059	49282HPS
28093	59570	28095	51602	28096	51603
28109	49574	28110	49575	28111	59555
28112	49941	28113	49940	28122	19543HPS
28123	51207	28124	51208	28125	19333
28158	59300	28200	49578	28215	51740
28216	51741	28220	49245	28237	49276
28238	49277	28266	49252	28268	59584
28293	59635	28294	59636	28318	49306
28319	49307	28351	19099	28355	49309
28356	19394	28368	52807	28369	52808
28420	49092	28466	49159	28467	59698
28468	59697	28469	59679	28470	51686
28475	33044	28480	52813	28481	52814
28511	51882	28512	59581	28575	51226
28576	51227	28591	51569	28606	49039HPS
28619	59013	28628	49238	28629	49239
28638	59024	28648	19097	28649	19098
28659	59552HPS	28671	51302	28672	51303
28695	49290	28696	49291	28710	49312
28711	49313	28733	33045	29142	49310
29143	49311	29144	19097	29145	19098
29185	33561	29235	49607	29242	51632
29243	51633	29253	51636	29254	51637
29280	33045	29324	49618	29325	49619
29346	36778	29352	51390	29376	49594
29385	49099	29399	59017	29400	59016
29419	59014	29420	59015	29422	19398
29423	19399	29424	49301	29425	49302
29450	36774	29459	51829HPS	29461	51829HPS
29604	49965	29605	49966	29623	49192
29624	49193	29637	49190	29638	49191

Die aufgeführten Vergleichsnummern dienen nur zur besseren Identifikation.
References are only specified for a better identification.
Les références mentionées ne servent qu' á une meilleure identification.

FEBI BILSTEIN	MAPCO	FEBI BILSTEIN	MAPCO	FEBI BILSTEIN	MAPCO
29644	19993	29651	59674	29652	59675
29671	33563	29672	59266	29673	51720
29675	51719	29679	49112	29680	49113
29683	49114	29684	49115	29685	59596
29686	59595	29692	49288	29826	51254
29827	33576	29830	51250	29855	52806HPS
30126	59344HPS	30127	59341HPS	30151	52812
30509	51724	30510	51725	30514	51634
30516	51648	30517	51649	30605	51296
30606	51297	30654	51736	30691	33987
30696	36773	30706	52810	30723	51619
30724	51620	30830	51625	30907	52716
30916	33574	30917	33575	31106	33566
31106	33563	31248 01	51542HPS	31253	36939
31273	52809	31277	51872	31297	19494
31298	19495	31299	37835	31325	51738
31326	51739	31547	33912	31561	49777
31714	51392	31718	49318	31719	49319
31722	33912/2	31764	51241	31765	51242
31970	49315	32116	49321	32116	49320
32140	51252	32141	51253	32163	51624
32163	51623	32430	51651	32511	49960
32512	49961	32767	59012	33523	52714
33524	52715	34283	33069	34284	33007

HERTH+BUSS JAKOPARTS	MAPCO	HERTH+BUSS JAKOPARTS	MAPCO	HERTH+BUSS JAKOPARTS	MAPCO
J4820302	49518	J4820501	19510	J4820502	19512
J4820505	59205	J4820526	51236	J4820900	59211
J4821000	19520	J4821000	59257	J4821021	59524
J4821021	59225	J4821092	49137	J4822001	19560
J4822015	59273	J4822017	49566	J4822028	59281
J4822063	51380	J4822082	51567	J4823000	51581
J4823005	19580	J4823011	59350	J4823024	51340
J4823033	51342	J4824000	59319	J4824005	19508
J4824016	59515	J4825007	19547	J4828004	59201
J4828016	51250	J4830900	19719	J4831012	49138
J4832002	49567	J4832008	59277	J4832063	51381
J4833001	51341	J4833003	51343	J4834003	19509
J4840302	51533	J4840500	59574	J4840502	59575
J4840503	59336	J4840506	59573	J4840507	51210
J4840514	59554	J4840521	59572	J4840522	59556
J4840528	51238	J4840900	59217	J4840904	51292
J4841004	59258	J4841020	59525	J4842015	49287
J4842018	59328	J4842019	59268	J4842035	59332
J4842040	51382	J4843010	49586	J4843011	19599
J4843024	19584	J4843051	59711	J4843052	59232
J4843053	51344	J4844000	59246	J4844005	59557
J4844006	19502	J4844006	59512	J4848015	51251
J4860300	59346	J4860509	59585	J4860523	51239
J4860904	51300	J4861000	59521	J4861020	19524

Die aufgeführten Vergleichsnummern dienen nur zur besseren Identifikation.
References are only specified for a better identification.
Les références mentionées ne servent qu' á une meilleure identification.

HERTH+BUSS JAKOPARTS	MAPCO	HERTH+BUSS JAKOPARTS	MAPCO	HERTH+BUSS JAKOPARTS	MAPCO
J4861023	19536	J4861024	59522	J4862033	51388
J4862039	51565	J4863001	19585	J4863004	51537
J4863005	51540	J4863007	49589	J4863014	51536
J4863018	51535	J4864000	19503	J4864002	19503
J4865007	49940	J4872004	51389	J4882009	51564
J4883000	51534	J4890300	59594HPS	J4890300	59343HPS
J4890302	51231	J4890906	51293HPS	J4891003	51526
J4891009	19527HPS	J4891013	49227HPS	J4891015	51522
J4891018	51525HPS	J4891027	59851	J4892008	49579HPS
J4892015	51374HPS	J4892016	51377HPS	J4892023	51570
J4892025	51575	J4892042	51576	J4893000	19592HPS
J4893006	49591HPS	J4893008	59535HPS	J4893011	51332HPS
J4893014	51336	J4893015	51610	J4893023	51339HPS
J4894004	59503HPS	J4894005	59502HPS	J4894005	59502
J4894009	49269HPS	J4894010	49268HPS	J4894019	51507HPS
J4894020	51508HPS	J4895004	59543HPS	J4895011	59545HPS
J4895012	51545HPS	J4895013	51546	J4900500	59576/1
J4900504	59292	J4900507	51211	J4900514	51234
J4900903	49597	J4900905	51296	J4901000	49528
J4901007	49530	J4901017	49220	J4901022	51284
J4901031	59358	J4902004	49550	J4902028	49257
J4903003	49584	J4903004	49230	J4903006	51538
J4903025	59368	J4903034	51330	J4904014	49215
J4905012	49544	J4908002	49565	J4908005	51590
J4908011	51252	J4910500	59577/1	J4910504	59291
J4910507	51212	J4910511	49941	J4910514	51235
J4910905	51297	J4911007	49531	J4911017	49221
J4911022	51285	J4912004	49551	J4912026	49576
J4912026	49577	J4912028	49258/1	J4912028	49258
J4913003	49585	J4913004	49231	J4913006	51539
J4913025	59369	J4913033	51531	J4913034	51331
J4914014	49216	J4915012	49545	J4918005	51591
J4918011	51253	J4920500	59386	J4921001	49526
J4923002	49235	J4924005	59508	J4924005	49502
J4924006	49513	J4924008	49260	J4924014	51500
J4930500	59387	J4931001	49527	J4933002	49234
J4934005	59509	J4934006	49514	J4934008	49261
J4934014	51501	J4940310	51215	J4943000	59370
J4944502	49504	J4954502	49505	J4960300	59344HPS
J4960302	51230	J4960303	59345	J4960308	59589
J4960310	59583	J4960311	51532	J4960504	51201
J4960505	51202	J4960512	49250HPS	J4960515	51206HPS
J4960516	51205HPS	J4960517	51203	J4960519	49253
J4960700	51598	J4960904	51290HPS	J4961000	59226HPS
J4961000	49525HPS	J4961010	51520	J4961012	49226HPS
J4961014	49229	J4961019	49224HPS	J4961020	49228
J4961028	49222HPS	J4961030	59250	J4962006	49270HPS
J4962022	51569	J4962033	49274HPS	J4962046	51378HPS
J4962055	51392	J4963004	19516	J4963005	49590HPS

Die aufgeführten Vergleichsnummern dienen nur zur besseren Identifikation.
References are only specified for a better identification.
Les références mentionées ne servent qu' á une meilleure identification.

HERTH+BUSS JAKOPARTS	MAPCO	HERTH+BUSS JAKOPARTS	MAPCO	HERTH+BUSS JAKOPARTS	MAPCO
J4963015	51334HPS	J4964000	51505	J4964001	49200HPS
J4964020	59244	J4965000	19543HPS	J4965003	59540HPS
J4965005	59546	J4965008	59510HPS	J4965010	59541HPS
J4965011	59537	J4965011	59537HPS	J4965014	49905HPS
J4968004	59024	J4968008	51255	J4970300	59341HPS
J4970512	49251HPS	J4970517	51204	J4970904	51291HPS
J4971011	51521	J4971030	59251	J4972007	49271HPS
J4972044	51573	J4972044	51568	J4972045	49284
J4972046	51379HPS	J4973015	51335HPS	J4973018	51338
J4974020	59243	J4975005	59547	J4975008	59511HPS
J4975011	59538HPS	J4975011	59538	J4982008	51383
J4984011	51504	31774 01	51390		

LEMFÖRDER	MAPCO	LEMFÖRDER	MAPCO	LEMFÖRDER	MAPCO
10020 04	19898	10022 02	49789	10023 02	49790
10026 02	19692	10028 03	19680	10029 02	19693
10031 01	33899	10035 04	19897	10041 02	19681
10050 02	49763	10053 02	19684	10054 02	19685
10055 02	19603HPS	10060 02	51870	10061 02	51871
10063 01	33829	10064 01	33891	10069 01	49699
10073 02	49718	10074 02	49717	10077 01	19694
10079 01	33892	10080 01	33878	10084 01	33894
10085 01	33901	10096 01	49698	10101 01	19695
10125 02	33828	10126 03	33842	10127 01	33846
10132 03	33827	10134 02	33830	10142 03	49762
10143 02	19890	10144 03	19899	10145 03	49761
10146 02	19850	10149 03	19854	10151 05	19894
10152 03	19856	10153 04	19857	10155 03	19868
10156 04	19881	10157 01	19852	10158 03	51801
10159 03	19884	10160 04	19876	10161 07	19889/1
10162 02	19883	10163 03	19851	10164 03	19869
10167 04	51800	10169 05	19879/1	10172 01	19858
10174 01	33859	10175 01	33929	10176 01	33913
10193 02	33826	10194 02	33871	10196 01	33833
10201 01	33897	10203 02	33819	10205 02	33818
10206 01	33893	10209 01	33896	10222 01	33858
10248 02	19892	10249 02	19878	10250 02	19877
10251 02	19874	10253 03	19861	10254 03	19860
10257 02	19864	10258 02	19865	10262 02	49873
10262 03	49873	10263 02	49874	10263 03	49874
10264 02	19871	10268 02	49672	10269 02	49673
10271 02	19888	10272 01	19887	10273 02	51805
10274 02	19866	10275 02	19882	10276 02	51806
10278 02	49767	10280 01	51802	10280 01	51803
10280 02	51803	10280 02	51802	10282 01	19891/1
10284 01	19880	10285 02	49764	10286 01	19859
10288 02	19872	10289 02	49766	10292 01	49674
10293 02	49675	10294 02	19862	10295 02	19863
10296 01	49674/1	10497 01	49661	10498 01	49662
10499 01	19673	10500 01	19674	10517 02	33691

Die aufgeführten Vergleichsnummern dienen nur zur besseren Identifikation.
References are only specified for a better identification.
Les références mentionées ne servent qu' á une meilleure identification.

LEMFÖRDER	MAPCO	LEMFÖRDER	MAPCO	LEMFÖRDER	MAPCO
10518 02	19662	10519 03	19661	10521 01	33637
10521 01	33637/2	10523 01	49733	10524 01	49734
10530 01	33639	10531 01	33638	10532 01	33666
10533 01	19665	10536 01	19666HPS	10536 01	19666/1
10537 01	19670HPS	10538 01	19671HPS	10542 01	19699
10546 01	33875	10553 01	33875/1	10556 01	33641
10559 01	33847	10575 02	19667HPS	10576 02	19678HPS
10582 01	49780	10583 01	49781	10584 01	19660
10589 01	19663	10590 01	19664	10591 01	49782
10592 01	49783	10593 01	49785	10615 01	49730
10617 01	19675	10618 01	19668	10619 01	19669
10620 01	49657	10623 01	49658	10625 01	49660
10639 01	33689	10640 01	33690	10641 01	33695
10643 02	49788	10670 02	49786	10671 01	49787
10693 03	49741	10694 03	49740	10697 01	19786
10703 03	19848	10704 01	19849	10705 02	19847
10706 03	19827	10706 03	19824	10707 03	19823
10708 01	19826	10709 03	19836	10710 03	51850
10710 03	59897	10711 02	19846	10717 02	19829
10718 02	19842	10719 02	19843	10720 01	19840
10721 02	19841	10722 01	19838	10722 02	19838
10724 02	19830/1	10725 02	19831/1	10726 02	19828
10729 01	49898	10730 01	49899	10730 02	49899
10731 01	49896	10732 01	49897	10735 01	19845
10735 01	59865	10738 01	49826	10738 03	49826
10739 03	49827	10740 01	19837	10741 02	49891
10742 01	49893	10743 01	49892	10744 01	19822
10745 01	19825	10746 03	19820	10747 01	33870
10748 03	19821	10749 01	49801	10750 01	19832
10762 04	19844	10764 03	19839	10767 01	49813
10970 01	33841/4	10973 02	49817	10974 02	49818
10975 02	49815	10976 02	49816	10977 04	19819
10979 01	33910	10982 01	33942	10983 02	36899
10984 01	36924	10985 01	33865	10994 01	33970
11004 01	49819	11005 01	49820	11006 01	33867
11008 01	36920	11016 01	33874	11017 01	33973
11019 01	36916	11020 01	36971	11021 01	36972
11078 01	33972	11087 02	33922	11117 01	36908
11117 01	36913	11118 01	33889/4	11123 01	33836
11149 02	33936	11150 01	33841	11213 02	33889/3
11214 02	33889/2	11233 01	33837	11244 01	59831
11287 01	36980	11297 01	36922	11299 02	36921
11308 01	33868	11355 01	33978	11391 01	49847
11395 01	49848	11416 01	49844	11448 01	49845
11449 02	49846	11451 01	49880	11452 01	49849
11462 01	59898	11478 02	59212	11580 01	19451HPS
11582 01	19412	11582 02	19412	11583 01	19413
11584 01	19414	11585 03	19470	11586 02	19415
11586 02	19312	11588 01	19339HPS	11589 02	19337HPS

Die aufgeführten Vergleichsnummern dienen nur zur besseren Identifikation.
References are only specified for a better identification.
Les références mentionées ne servent qu' á une meilleure identification.

LEMFÖRDER	MAPCO	LEMFÖRDER	MAPCO	LEMFÖRDER	MAPCO
11590 01	33321	11591 02	19422	11592 02	19425
11596 02	19419	11600 01	19435HPS	11601 02	19429HPS
11602 03	33717	11603 02	19026HPS	11603 02	19420
11630 03	19025	11631 02	19044	11634 01	19047
11635 02	19080	11636 04	19041	11637 02	19406
11638 02	19407	11639 01	19408	11641 02	19744/1
11642 02	19743/1	11644 01	19732	11645 01	19721
11646 03	19727	11650 03	19725	11651 01	19740
11651 01	49644	11655 01	19761	11656 01	19760
11657 02	19754	11658 02	19340	11658 02	19410
11658 02	19355/1	11659 01	19748	11663 01	33611
11665 03	19736	11666 03	19735	11667 02	19654
11669 02	19737/1	11670 02	19745	11671 01	19747/1
11672 01	19746/1	11673 01	33627	11688 04	19503
11689 01	59333	11690 01	19507	11693 02	59331
11693 03	59331	11694 02	59330	11694 03	59330
11698 02	59557	11699 01	19502	11699 01	59512
11700 03	59319	11705 03	59290	11708 03	49616
11709 03	49745	11711 02	49743	11712 02	49742
11733 01	19084	11793 01	49648	11794 01	49649
11805 01	19580	11806 02	51535	11807 03	19582
11809 01	49589	11810 02	59231	11814 02	19587
11815 02	19588	11816 01	19595	11826 02	59221
11835 02	19542	11836 01	59220	11837 01	59222
11839 01	19546	11840 03	19545	11841 01	49256
11842 02	59310	11843 01	19547	11846 01	59223
11847 01	59224	11848 01	19552	11849 03	19551
11851 01	49578	11852 01	49247	11856 02	19541
11857 03	59536	11857 03	59308	11858 02	59303
11859 01	19544	11860 02	19535	11861 02	59325
11863 02	19536	11866 03	59520	11868 02	59523
11868 03	59523	11874 03	59522	11874 03	19522
11882 01	19520	11883 01	59254	11883 01	59526
11884 02	59258	11885 01	19534	11887 03	59255
11888 01	59257	11891 01	59528	11891 01	19533
11892 02	59297	11895 02	59334	11896 01	59335
11897 01	59323	11898 02	59318	11901 03	19561
11901 03	19568	11902 02	59569	11903 02	59235
11904 01	51383	11906 02	19560	11907 02	59278
11908 02	59282	11914 02	59332	11915 02	19564
11916 02	59264	11917 01	59266	11918 02	19567
11919 03	49288	11920 02	59270	11921 01	19574
11922 02	19573	11980 01	19980	11981 01	19981
11988 01	19983	12012 01	19907	12015 01	19902
12016 01	19901	12019 02	19908	12020 01	19909
12023 03	19906	12024 02	49952	12031 02	19912
12037 01	33923	12059 01	19358	12062 02	19307
12062 03	19307	12064 01	19310	12065 01	19311
12066 01	19352	12067 01	19354	12067 01	19355

Die aufgeführten Vergleichsnummern dienen nur zur besseren Identifikation.
References are only specified for a better identification.
Les références mentionées ne servent qu' á une meilleure identification.

LEMFÖRDER	MAPCO	LEMFÖRDER	MAPCO	LEMFÖRDER	MAPCO
12070 04	19301	12073 01	19315	12074 01	19316
12100 02	19139	12101 02	19140	12102 01	19102
12108 03	19111	12109 03	19112	12116 01	19105
12117 02	19108	12118 01	19135	12119 03	19109
12125 01	19129	12126 01	19127	12127 02	19128
12128 01	49107	12128 01	19166	12129 01	19150
12129 01	19151	12131 01	19122	12132 01	19123
12135 02	19132	12148 02	19801	12149 02	49802
12152 03	19714	12153 04	19802	12153 04	19612
12157 01	59296	12162 01	49760	12163 01	19804/1
12164 01	19803/1	12165 01	19613	12166 01	19614
12167 01	49753	12167 01	49751	12167 02	49753
12167 02	49751	12168 01	49750	12168 01	49752
12168 02	49750	12168 02	49752	12170 01	49754
12171 01	49755	12172 02	19719	12173 02	19718
12178 01	19800	12179 02	19610	12180 02	19611
12191 01	33716	12192 01	33715	12202 02	33726
12203 04	19607	12204 02	33727	12206 02	19602HPS
12207 01	19624	12209 03	19617	12210 03	19618
12214 01	49756	12215 01	49757	12220 02	33757
12222 01	19620	12223 01	19619	12227 01	33714
12228 01	33725	12229 01	19816	12235 01	19717
12236 02	19136	12237 01	33879	12239 01	19620
12240 01	19619	12282 01	19323	12282 01	19354/1
12296 01	36662	12316 01	19198	12316 01	19126
12337 01	19833	12399 01	36909	12401 01	33979
12422 01	33692	12443 01	19085	12546 01	19834
12547 01	49800	12566 02	59847HPS	12582 02	59845
12644 01	59800	12650 01	36923	12661 02	49807
12662 02	49805	12663 02	49806	12831 01	49882
12831 01	19742	12838 01	49881	12839 01	49884
12840 01	49883	12841 01	49886	12871 01	33946
12872 01	36925	13084 01	49727	13085 01	49728
13086 02	49723	13087 01	49724	13087 02	49724
13099 01	49651	13127 02	49694	13128 02	49695
13132 02	49795HPS	13137 01	49721	13138 01	49722
13202 02	59619	13203 02	59620	13208 01	59621
13282 01	36669/2	13283 02	49725HPS	13283 02	49725
13284 02	49726HPS	13284 02	49726	13287 01	49746
13297 03	49739	13307 01	59622	13308 02	49652
13309 01	36663	13317 02	49796	13341 01	19782
13342 01	19783	13450 01	59837	13451 01	59836
13474 01	49050	13478 01	49821	13479 01	49822
13487 01	49808	13488 01	49809	13501 01	33974
13668 01	49686	13668 02	49686	13673 01	49710OES
13676 02	49708OES	13677 02	49709OES	13678 01	49732
13719 02	49680OES	13720 02	49681OES	13760 01	33906
13779 03	19875	13790 02	19896	13791 02	19895/1
13791 02	19895	13792 02	19885	13793 02	19886

Die aufgeführten Vergleichsnummern dienen nur zur besseren Identifikation.
References are only specified for a better identification.
Les références mentionées ne servent qu' á une meilleure identification.

LEMFÖRDER	MAPCO	LEMFÖRDER	MAPCO	LEMFÖRDER	MAPCO
13794 02	19867	13798 02	49878	13830 01	33697
14131 01	49759	14133 02	59617	14134 02	59618
14278 03	49866/1	14341 01	33904	14378 01	33900
14466 01	19870	14466 01	19870/1	14466 01	19870/2
14524 01	36904	14530 01	36941	14540 01	33839
14541 01	33840	14542 03	49682	14542 03	49685OES
14545 02	19688	14546 02	19689	14547 02	49773
14548 02	49774	14549 02	19873	14554 01	33915
14555 03	36784	14555 03	33872	14556 01	33914
14571 02	49859	14595 01	49688	14596 01	49689
14597 02	59893	14599 01	49758	14639 01	19805
14640 01	19615	14641 01	19616	14643 01	49604
14644 01	19710	14645 01	19711	14654 02	19813
14657 02	19812	14703 01	49600	14704 01	49601
14705 01	19626	14706 02	19628	14707 01	19621
14711 01	33877	14723 01	19606HPS	14724 02	19600HPS
14726 01	33786	14766 01	33306	14773 02	19421
14791 01	19409	14792 01	19411	14793 01	19472
14794 01	19471	14798 01	33320	14799 01	19417
14800 01	19418	14849 01	19806	14850 01	19807
14914 03	51581	14915 03	51540	14916 03	51537
14943 01	19576	14944 01	19575	14945 03	49579HPS
14947 02	19513	14954 01	59339	14956 01	19515
14956 01	59570	14977 02	19320	14978 02	19319
15007 01	19340/1	15013 01	59866	15175 01	19532
15176 01	19531	15177 01	19598	15178 02	19597
15197 01	59215	15198 01	59216	15200 01	59372
15201 01	59371	15230 02	49744	15233 01	59849
15234 01	19811	15234 01	19811HPS	15252 02	19584
15281 02	19555	15284 01	59540HPS	15334 03	19428
15339 01	49579HPS	15357 01	19081	15358 01	19082
15369 02	19042	15377 02	19405	15378 02	49735
15378 03	49735	15386 02	49736	15386 03	49736
15407 02	19645	15407 02	19646	15436 02	19506
15438 03	19501	15439 02	19505	15440 03	19500
15441 01	19504	15445 01	19511	15446 01	49255
15450 01	19510	15451 01	59336	15456 02	19091
15468 02	19741	15478 01	19583	15480 02	51534
15483 02	19581	15488 03	19585	15489 02	19594
15551 03	49249	15560 01	19540	15566 02	59306
15567 02	19550	15568 03	19549	15569 03	19548
15577 01	19537	15589 03	19556	15595 01	59229
15599 01	59322	15600 01	49531	15601 01	59321
15602 01	49530	15642 01	19164	15642 01	19164HPS
15657 01	19116	15669 02	19962	15670 02	19961
15672 02	49560	15683 01	49554	15690 01	59289
15697 03	59201	15698 01	59320	15702 01	49596
15703 02	59317	15714 03	19569	15714 03	19562
15715 02	59234	15717 02	59261	15722 02	59279

Die aufgeführten Vergleichsnummern dienen nur zur besseren Identifikation.
References are only specified for a better identification.
Les références mentionées ne servent qu' á une meilleure identification.

LEMFÖRDER	MAPCO	LEMFÖRDER	MAPCO	LEMFÖRDER	MAPCO
15739 02	59328	15741 02	19566	15789 01	59624
15932 02	59613HPS	16056 02	33733	16057 01	33732
16057 01	33788	16057 02	33732	16057 02	33788
16058 01	33731	16061 01	33766	16062 01	33754
16063 01	33753	16200 01	49561	16201 02	49562
16204 01	59324	16206 01	19518	16263 02	49525HPS
16297 02	19521	16298 03	19530	16307 02	59227
16308 02	59228	16312 01	59225	16315 02	59527
16378 02	59275	16379 01	59277	16380 01	59281
16388 02	59276	16388 03	59276	16394 02	19565
16395 02	59265	16395 03	59265	16396 02	59263
16400 02	59272	16401 02	59267	16410 01	59262
16426 03	59236	16429 02	59565	16430 02	59563
16431 01	59260	16432 03	19571	16432 03	19563
16439 01	49271HPS	16439 01	19578	16440 01	19577
16503 03	19107	16610 01	49861	16611 01	49713OES
16620 01	51810	16638 02	49857	16652 01	49716
16653 02	49714	16654 01	49729	16655 01	49715
16784 02	49858	16819 01	59237	17355 01	33835
17400 02	49850	17433 02	19321	17434 02	19322
17435 01	19437	17436 01	19438	17437 02	19439
17438 02	19440	17452	33415	17464 02	19338HPS
17501 01	19351	17502 02	19317	17502 02	19313
17511 02	19318	17511 02	19314	17515 01	19336/1
17619 02	49702	17620 02	49703	17623 02	59895
17623 02	49700	17624 02	59896	17635 01	49860/9
17642 02	59817	17642 04	59817	17661 01	33876
17663 01	33941	17674 02	59814	17675 02	59815
17681 01	33916	17682 02	33926	17683 01	33928
17705 01	33902	17739 02	19632	17785 02	19765
17786	19763	17787 02	19758	17788 02	19757
17791 02	19759	17795 01	19640	17796 01	19641
17842 01	59658	17843 02	19752	17844 02	19753
17857 01	33609	17861 02	49646	17863 01	19769
17864 01	19763	17864 01	19768	17865 01	19756/2
17866 01	19755/2	17875 01	49676/1	17919 01	49677/1
17978 01	36660	17978 03	36660	17981 02	19700HPS
17988 02	19784	17996 02	19785	18003 02	49653
18004 02	49654	18034 01	59867	18047 02	49856HPS
18048 02	19608HPS	18048 02	19604HPS	18113 01	19144
18114 01	19145	18126 01	19114	18127 01	19113
18136 01	19137	18137 01	19138	18140 01	19124
18141 01	19125	18142 01	19163	18143 01	19147
18144 01	19148	18178 01	49104	18179 01	49105
18180 01	49106	18208 01	19103	18211 02	19133
18212 02	19134	18373 02	59816	18373 04	59816
18491 02	19131	18874 03	49836	18875 03	49831
18876 02	49833	19107 01	19951	19129 01	33925
19130 01	49645	19137 01	19605HPS	19139 03	19750

Die aufgeführten Vergleichsnummern dienen nur zur besseren Identifikation.
References are only specified for a better identification.
Les références mentionées ne servent qu' á une meilleure identification.

LEMFÖRDER	MAPCO	LEMFÖRDER	MAPCO	LEMFÖRDER	MAPCO
19247 01	33307	19248 01	33415	19248 01	33313
19249 01	19324	19251 03	19430	19256 02	19367
19257 01	33330	19306 01	19476HPS	19307 01	33329
19308 01	59615	19309 01	59616	19347 01	19158
19373 01	19162	19387 02	59628HPS	19499 02	19053
19719 02	49830	19722 01	49837	19740 04	19956
19941 01	33616	19945 01	36796	19946 01	36973
19949 01	19320	19956 01	49894	19957 01	49823
19957 02	49823	19958 01	49825	19981 01	49824
19981 02	49824	20002 02	19064	20015 01	19048
20016 01	19040	20028 01	19051	20029 01	19050
20030 01	19452	20031 02	19046	20041 02	19052
20049 01	19058	20050 02	19008	20097 01	19115
20128 01	33917	20133 03	49942	20136 02	19910
20137 02	19911	20172 01	49917	20188 01	59657
20227 02	59599	20228 02	59598	20246 02	59250
20284 02	19982	20325 01	59665	20338 03	19045
20346 03	19007	20346 03	19059	20371 02	19130
20372 02	19130/1	20373 02	19152	20375 01	33146
20387 01	33932	20498 01	59862	20730 01	36919
20731 03	19817	20731 03	19818	20908 02	19937
20908 02	19937HPS	20962 01	49692	20963 01	49693
20967 01	19676	20982 04	19853HPS	20992 02	51830
20993 02	51831	20994 02	59864	21023 02	49100
21023 02	19189	21024 02	49101	21024 02	19190
21029 01	49792OES	21030 01	49791OES	21044 02	49863
21044 01	49863	21051 01	19623	21057 01	19622
21058 01	19633	21059 01	19634	21074 01	33977
21085 01	33976	21113 01	33903	21153 02	59844
21154 02	59843	21188 01	49641	21189 01	49640
21190 01	19170	21190 01	19181	21191 01	19180
21191 01	19169	21193 01	19141	21194 01	19142
21195 01	19065	21236 01	33912	21304 01	33939
21379 02	36665	21380 02	36666	21381 01	36664
21383 01	36661	21413 01	33834	21419 01	33909
21486 01	33720	21525 02	19143	21549 01	33937
21554 02	49683OES	21554 02	49683/1OES	21555 02	49684/1OES
21555 02	49684OES	21607 03	51713	21608 03	51714
21609 01	49738	21610 02	51711	21611 02	51712
21667 02	51847	21678 02	19914HPS	21699 01	49868
21699 01	49867	21749 02	49803	21750 01	49804
21776 02	33849	21855 02	49690	21856 02	49691
22001 01	19648	22002 02	19649	22003 02	19604HPS
22004 02	19653	22068 01	33943	22072 01	33895
22088 02	49841HPS	22089 02	49840HPS	22116 01	33848
22214 01	37837	22250 02	49690/1	22251 03	49701
22252 03	49700	22314 01	19599	22323 01	49943
22324 01	49606	22339 04	19426	22341 01	19427
22342 02	49139	22349 01	49655	22350 01	49656

Die aufgeführten Vergleichsnummern dienen nur zur besseren Identifikation.
References are only specified for a better identification.
Les références mentionées ne servent qu' á une meilleure identification.

LEMFÖRDER	MAPCO	LEMFÖRDER	MAPCO	LEMFÖRDER	MAPCO
22394 02	49839	22397 01	49113	22398 01	49112
22399 01	36852	22408 01	59205	22409 01	59575
22409 01	59571	22410 01	59573	22412 01	59555
22423 01	33944	22475 01	49704	22477 01	33100
22480 01	33148	22483 01	33171	22489 01	33306
22494 01	33143	22496 01	33144	22513 01	33437
22569 01	19686/1	22651 02	19348HPS	22652 01	36975
22670 02	49558	22671 02	49557	22674 02	19526
22676 02	19524	22677 02	59564	22678 02	59568
22679 01	19525	22684 02	59214	22686 02	59256
22687 01	59360	22688 02	49510	22690 01	51505
22696 02	19589	22696 02	59350	22698 01	19592HPS
22700 02	59307	22724 01	19362HPS	22726 02	19129/1
22752 02	49799	22755 01	36917	22773 01	19635
22774 01	19636	22775 01	19652	22776 01	19651
22777 01	19643/1	22778 01	19642/1	22779 01	19702/1
22780 01	19701/1	22781 01	19756/3	22782 01	19755/3
22783 01	49705	22784 01	49706	22785 01	19442
22786 01	19441	22787 01	19157	22815 01	51710OES
22816 02	51730	22817 01	19423	23010 02	49834HPS
23565 01	33785	24502 01	33170	24512 01	33314
24516 01	33101	24529 02	19365	24534 02	19447
24538 02	19449	24539 01	19450	24548 01	33614
24603 02	49914	24604 02	49913	24605 02	49912
24637 02	59820	24648 01	49231	24649 01	49230
24683 01	59326	24684 01	49518	24686 02	51235
24689 01	49254	24689 01	49254HPS	24694 01	59552HPS
24696 01	59543HPS	24708 01	49505	24709 01	49504
24724 01	49843	24726 02	19368HPS	24729 01	49566
24730 01	49567	24802 02	19696	24803 02	19697
24810 01	19755/1	24811 01	19756/1	24913 01	37833
24914 01	37832	24930 01	33333	25017 02	19639
250310	51666	25039 02	49812HPS	25040 02	49811HPS
25084 01	49607	25087 01	19637	25087 01	19638
25087 03	19638	25087 03	19637	25094 02	59878
25108 02	19448	25114 01	59638	25147 01	19631
25170 02	59840	25171 02	59841	25172 02	49895HPS
25173 02	51851	25176 01	33615	25177 02	19346
25178 02	19347	25190 01	19527HPS	25198 01	49287
25202 01	49524	25204 01	19523	25216 01	33147
25244 01	19446	25244 01	19335	25260 01	19092
25261 01	19093	25291 01	33908	25323 02	49620
25324 02	49621	25326 02	51827	25329 02	51723
25336 01	51735	25341 01	51742	25342 01	51743
25343 02	51744	25344 02	52800	25345 02	52801
25377 02	36668/2	25383 01	51660	25384 02	51661
25385 02	51662	25386 01	59695	25387 02	59694
25399 01	19701	25400 01	19702	25403 01	36987
25443 01	59846	25446 01	49135	25453 01	19723

Die aufgeführten Vergleichsnummern dienen nur zur besseren Identifikation.
References are only specified for a better identification.
Les références mentionées ne servent qu' á une meilleure identification.

LEMFÖRDER	MAPCO	LEMFÖRDER	MAPCO	LEMFÖRDER	MAPCO
25454 01	19722	25456 01	19724	25461 02	51840
25462 02	51841	25463 02	59812HPS	25466 01	49737
25475 01	19183	25482 01	19171	25483 01	49126
25484 02	49136	25486 02	19156/1	25492 01	19017
25493 01	19353	25494 01	19627	25497 02	19777
25502 01	19373	25505 01	19489	25506 01	19490
25508 01	19477	25509 01	19478	25510 01	49143
25511 01	49144	25512 01	49145	25513 02	49118HPS
25513 02	49118	25517 01	49040	25518 01	49043
25519 01	19028HPS	25522 02	59614HPS	25524 02	59810
25525 02	59811	25534 02	19473	25537 01	33632
25538 01	19780	25539 01	19781	25540 02	19751
25553 02	49906HPS	25773 01	59692	25774 01	59693
25775 01	49642	25792 02	19659HPS	25800 01	59854
25801 01	59855	25808 02	59673	25809 01	19773HPS
25810 02	19775HPS	25810 02	19775	25811 02	19776HPS
25812 01	59672	25813 01	33617	25814 02	49109HPS
25815 02	49108HPS	25850 02	59601	25855 02	59637
25857 01	52712	25858 01	52713	25863 01	49707HPS
25868 02	59600	25869 01	59610	25870 02	59603HPS
25870 02	59603	25871 02	59604HPS	25871 02	59604
25885 01	49793	25886 01	49794	25896 02	59626
25898 02	59633	25899 02	59634	25900 02	59623HPS
25901 02	59631HPS	25902 02	59635	25903 02	59636
25904 02	59632	25905 02	59639	25909 01	36915
25924 01	19670/1	25925 01	19671/1	25941 02	59629
25942 02	59630	25947 01	36775	25948 01	36776
25972 01	59707OES	25979 02	59892	25980 01	59891
25980 02	59891	25985 02	51642HPS	25986 02	51643HPS
25990 01	51647	25993 01	33618	25997 01	33924
26000 02	59669	26001 02	59670	26002 01	59663
26003 02	59671	26003 02	59651	26004 02	19774
26004 02	19774HPS	26043 01	33883	26047 02	19389
26048 01	19491	26091 01	33864	26096 01	33787
26099 01	36670	26501 02	49610	26563 01	33337
26574 01	37836	26580 01	33796	26581 02	33768
26582 01	33767	26605 01	33676	26609 01	33642
26609 01	33643	26653 02	19375HPS	26667 01	19498
26668 01	19499	26669 02	59806	26670 02	59807
26671 01	59808/1	26701 02	49965	26702 02	49966
26705 02	49069	26706 01	49125	26707 01	59690
26708 01	59691	26710 01	51117/1	26711 01	49117/1
26712 02	49137	26713 02	49138	26714 02	19485
26715 02	19486	26720 01	19194	26721 01	19195
26723 01	19022	26743 02	19055	26744 02	19054
26745 02	19057	26746 02	19056	26749 02	19010
26752 02	19015	26755 01	49098	26761 02	19009
26762 01	19021	26763 01	19020	26773 02	51725
26774 01	51825HPS	26775 02	51829HPS	26782 01	36703

Die aufgeführten Vergleichsnummern dienen nur zur besseren Identifikation.
References are only specified for a better identification.
Les références mentionées ne servent qu' á une meilleure identification.

LEMFÖRDER	MAPCO	LEMFÖRDER	MAPCO	LEMFÖRDER	MAPCO
26795 02	49955	26818 01	49964	26846 02	19749
26938 01	33122	26939 01	33122	26981 02	59683
26996 01	59687	26997 01	59679	27018 01	49678
27019 01	49679	27020 01	19698	27027 01	51876
27028 01	51877	27029 01	51878	27030 01	51879
27056 01	19196	27057 01	19197	27064 01	59894
27083 02	59605HPS	27087 02	36689	27090 02	51638
27094 01	51630	27095 01	51631	27096 02	51636
27097 02	51637	27099 02	51646	27104 02	51632
27105 02	51633	27126 01	36771	27132 01	36772
27134 01	36798	27145 01	51737	27146 01	51738
27147 01	51739	27148 01	36774	27149 02	51644
27150 02	51645	27155 01	52710	27156 01	51874
27157 01	51875	27168 02	51639	27168 02	51639HPS
27171 02	51641HPS	27191 01	33934	27219 02	49140
27281 01	59877	27303 02	59251	27308 01	33635
27318 01	51839	27324 03	51834	27438 01	33949
27439 01	37838	27593 03	59640	27594 02	51719
27595 02	51720	27596 01	51722	27597 02	51721
27599 01	59641	27600 01	59642	27627 01	33912/2
27641 01	59808	27642 01	59809	27660 02	49226HPS
27667 02	49618	27668 02	49619	27702 01	19023
27708 01	49877	27710 01	59643	27711 01	19331/1
27712 01	19332/1	27719 02	49110	27720 02	49111
27722 01	33121	27726 01	49622	27730 02	49749HPS
27734 02	19629	27735 02	19630	27924 01	33417
27988 01	49227HPS	28058 02	49608	28272 01	49901HPS
28325 02	59676	28334 02	49124HPS	28335 02	19394
28499 02	19099	28727 01	49938HPS	28878 01	33120
28879 01	33119	28881 01	36690	28891 02	49154HPS
28893 01	33123	28896 01	33428	28897 01	33427
28898 01	33434	28899 01	33336	28960 01	49923
28961 01	49927	29315 01	36777	29317 02	59832
29318 01	36773	29413 01	49131	29414 01	49132
29415 01	52806HPS	29416 01	49039HPS	29417 01	49084
29418 01	49085	29419 01	49086	29420 01	49087
29420 01	19464	29421 01	51665	29465 01	49159
29468 01	19120HPS	29469 01	49151	29499 01	59664HPS
29531 02	51600HPS	29532 01	51601	29564 01	59686
29576 01	49303	29579 01	51683	29581 01	51687
29582 01	51688	29585 01	51686	29590 01	51685
29591 01	51681	29592 01	51682	29596 01	19385
29597 01	19386	29611 01	19973	29632 01	19174
29632 01	49102	29640 01	49905HPS	29641 02	49200HPS
29658 01	49590HPS	29658 01	49590	29659 01	59510HPS
29660 01	59541HPS	29663 01	19543HPS	29699 01	59358
29699 01	49152	29700 01	59359	29700 01	49153
29708 01	36778	29709 01	36938	29726 01	37830
29740 01	52716	29742 01	52715	29744 01	51745

Die aufgeführten Vergleichsnummern dienen nur zur besseren Identifikation.
References are only specified for a better identification.
Les références mentionées ne servent qu' á une meilleure identification.

LEMFÖRDER	MAPCO	LEMFÖRDER	MAPCO	LEMFÖRDER	MAPCO
29745 01	51746	29750 01	37831	29751 01	36838
29793 01	49916HPS	29794 01	33678	29797 01	51577HPS
29838 02	51655	29839 02	51656	29855 01	51872
29856 01	51873	29907 01	19013	29908 01	19014
29909 01	49038	29915 01	36832	29916 01	36950
29925 01	59901HPS	29926 01	59904	29930 02	51667
29932 02	51668	29933 01	51654	29934 01	51659
29938 01	19810	29998 02	51724	30332 01	51648
30333 01	51649	30338 01	51634	30339 01	33995
30340 01	51635	30357 01	19512	30372 01	52804HPS
30373 01	52805HPS	30375 01	19493	30376 01	49400
30428 01	51858	30429 01	51859	30431 01	51856
30432 01	51857	30472 01	59017	30473 01	59016
30474 01	59020	30475 01	59021	30479 01	59014
30480 01	59015	30482 01	59872	30483 01	59873
30484 01	59838	30536 01	52711	30563 01	19529HPS
30565 01	51652	30567 01	51822	30568 01	51823
30602 01	49312	30603 01	49313	30604 01	49314
30606 01	19383	30607 01	19384	30608 01	33322
30614 01	59351	30614 01	59351HPS	30615 01	49250HPS
30619 01	59355	30619 01	59355HPS	30624 01	51692
30625 01	19370HPS	30629 01	51715	30630 01	51716
30645 01	59503HPS	30646 01	59502	30646 01	59502HPS
30647 01	59226HPS	30648 01	59511HPS	30665 01	52813
30666 01	52814	30667 02	49304HPS	30668 02	49305HPS
30673 01	51651	30682 01	49155	30692 01	51381
30695 01	51380	30697 01	51382	30700 01	19559HPS
30701 01	19558HPS	30704 01	59346	30721 01	36704
30722 01	36705	30738 01	51575	30774 01	59572
30836 01	36988	30936 01	49192	30937 01	49193
30967 01	51718HPS	30991 01	49093	31007 01	51624
31007 01	51623	31007 01	51622	31088 01	51298
31089 01	51299	31090 01	51300	31148 01	52809
31196 01	49099	31207 01	49289	31237 01	59246
31242 01	33124	31243 01	49160	31248 01	51542HPS
31249 01	51541HPS	31285 01	33173	31295 01	59013
31302 01	59011	31736 01	49092	31774 01	51390
31897 01	51734	31942 01	51619	31943 01	51620
31953 01	49156	31994 01	59024	32002 01	37835
32007 01	59647	32009 01	51336	32010 01	51610
32011 01	49157	32012 01	49158	32013 01	49161
33271 01	51332HPS	33272 01	59535HPS	33273 01	51334HPS
33274 01	51335HPS	33361 01	59594HPS	33362 01	59341HPS
33454 01	51291HPS	33455 01	51290HPS	33456 01	51293HPS
33457 01	51302	33458 01	51303	33484 01	19496
33485 01	19497	33518 01	51650	33697 01	52812
33707 01	49162	33713 01	51621	33726 01	49315
33769 01	49094	33770 01	49095	33816 01	49163
33834 01	51726	33835 01	51727	33841 01	59012

Die aufgeführten Vergleichsnummern dienen nur zur besseren Identifikation.
References are only specified for a better identification.
Les références mentionées ne servent qu' á une meilleure identification.

LEMFÖRDER	MAPCO	LEMFÖRDER	MAPCO	LEMFÖRDER	MAPCO
33909 01	49319	33913 01	49046	33927 01	51689
33944 01	33577	33952 01	59770	33972 01	51226
33973 01	51227	34287 01	49298HPS	34289 01	49306
34290 01	49307	34329 01	51341	34330 01	51340
34380 01	49320	34381 01	49321	34394 01	51301
34510 01	51286	34510 01	51287	34541 01	49777
34663 01	51343	34711 01	33987	34821 01	49096
34822 01	49097	35279 01	51826	35281 01	51740
35282 01	51741	54500-29000	51234		

METZGER	MAPCO	METZGER	MAPCO	METZGER	MAPCO
CI-KB P1	34413	CI-SB10	33428	CI-SB11	33437
CI-SB12	33426	CI-SB13	33425	CI-SB15	33431
CI-SB18	33335	CI-SB19	33334	CI-SB9	33427
CI-101AK	19389	CI-101K	19426	CI-102AK	19473
CI-102K	19427	CI-104	19478	CI105	19477
CI-106	19490	CI-107	19489	CI-108	19491
CI-302	19412	CI-304	19409	CI-306	19411
CI-306	19443	CI-310	49400	CI-312	19484
CI-314	19479	CI-503	19429HPS	CI-504	19451HPS
CI-84	19413	CI-85	19414	CI-902	19471
CI-903	19472	CI-904	19437	CI-905	19438
CI-905A	19474	CI-906	19440	CI-906A	19475
CI-907	19439	CI-907	19459	CI-912	19454
CI-913	19453	CI-914	19391	CI-915	19390
CI-916	19486	CI-917	19485	CI-918	19386
CI-919	19385	CI-92	19419	DW-0222	49298
DW-0222	49298HPS	DW-0627	19559HPS	DW-104	59211
DW-1876	51293HPS	DW-500	19558HPS	DW-502	51291HPS
DW-503	51290HPS	DW-5081	51296	DW-5082	51297
DW-602	19519	DW-900	19518	D-0001	49227HPS
D-0002	51282	D-0003	51281	D-1000	49537
D-1001	49536	D-114	19556	D-116	19525
D-118	19528	D-118	19523	D-122	19520
D-122	59257	D-122	59255	D-124	59225
D-4500	51285	D-4501	51284	D-4702	59251
D-4703	59250	D-5001	59851	D-5002K	19529HPS
D-501	59226HPS	D-502	19527HPS	D-503	49524
D-6000K	59850	D-606K	59325	D-618	19526
D-620	59522	D-620	19524	D-622	59522
D-624	19522	D-624	59522	D-628	49151
D-902	49535	D-902	49523	D-903	49534
D-903	49522	D-904	49527	D-905	49526
D-908	49521	D-909	49520	D-910	49529
D-911	49528	D-914	59359	D-914	49153
D-915	49152	D-915	59358	D-916	51530
D-917	51529	E-84N	19085	E-97	19080
F-KBP1	34054	F-KBP2	34053	FO-SB1	33614
FO-SB10	33618	FO-SB11	33627	FO-SB12	33677
FO-SB18	33646	FO-SB19	33647	FO-SB2	33615

Die aufgeführten Vergleichsnummern dienen nur zur besseren Identifikation.
References are only specified for a better identification.
Les références mentionées ne servent qu' á une meilleure identification.

METZGER	MAPCO	METZGER	MAPCO	METZGER	MAPCO
FO-SB3	33636	FO-SB4	33635	FO-SB5	33611
FO-SB7	33676	FO-SB9	33616	FO-0452	19776HPS
FO-0774	59662	FO-0775	59661	FO-100K	19765
FO-101K	19763	FO-104	19641	FO-105	19640
FO-106	19645	FO-107	51624	FO-110	19649
FO-111	19648	FO-112	49641	FO-113	49640
FO-114	59665	FO-115	59657	FO-118	49882
FO-118	19742	FO-119	19741	FO-120	49646
FO-121	49645	FO-122	59670	FO-123	59669
FO-124K	59671	FO-125	59673	FO-126	59672
FO-128	59640	FO-129	59643	FO-130	51343
FO-131	51342	FO-136	51620	FO-137	51619
FO-138	59676	FO-1668	59668	FO-1702	59648
FO-302	19644	FO-3051	59674	FO-3052	59675
FO-306	19650	FO-308	59663	FO-310	59666
FO-312	59641	FO-313	59642	FO-4209	33632
FO-4209	33632/1	FO-4210K	33633	FO-4210K	33633/1
FO-500A	19609HPS	FO-500M	19608HPS	FO-500M	19604HPS
FO-5000K	19780	FO-5001	19781	FO-501	19605HPS
FO-501	19773HPS	FO-502	51621	FO-504	19774
FO-504	19774HPS	FO-505P	19777	FO-506	59664HPS
FO-507K	51625	FO-508	19775HPS	FO-509	51600HPS
FO-510	51601	FO-5548	51610	FO-6269	19601
FO-6474	51613	FO-7036	19659HPS	FO-7577	19658
FO-7648	19775	FO-8920	51615	FO-8921	51614
FO-902	19756/4	FO-903	19755/4	FO-904	19756/2
FO-905	19755/2	FO-906	19702/1	FO-906	19756/3
FO-907	19755/3	FO-907	19701/1	FO-908	19769
FO-909	19768	FO-910	19643	FO-911	19642
FO-912	19643/1	FO-913	19642/1	FO-914	19702
FO-915	19701	FO-916	19652	FO-917	19651
FO-918	19657	FO-919	19656	FO-922	59651
FO-923	59650	FO-924	59645	FO-925	59644
FO-926	51603	FO-927	51602	FO-928	51623
FO-929	51622	F-SB1	33002	F-SB10	33014
F-SB11	33035	F-SB12	33013	F-SB13	33019
F-SB16	33017	F-SB2	33003	F-SB21	33018
F-SB30N	33057	F-103	19041	F-104	19047
F-105	19070	F-106	19046	F-107	19065
F-109	19078	F-109	19430	F-110	19042
F-112	49018	F-113	49017	F-114	19015
F-115	49098	F-118	19071	F-119	49012
F-12	19736	F-120	49010	F-122	49011
F-125	49038	F-126	49040	F-13	19735
F-130	19492	F-131K	49069	F-132K	49058
F-133	49057	F-134	49075	F-135	49074
F-136	49059	F-138	59010	F-141	19064
F-160K	19744/1	F-170K	19743/1	F-18K	19738/1
F-180K	19747/1	F-19K	19737/1	F-190K	19746/1

Die aufgeführten Vergleichsnummern dienen nur zur besseren Identifikation.
References are only specified for a better identification.
Les références mentionées ne servent qu' á une meilleure identification.

METZGER	MAPCO	METZGER	MAPCO	METZGER	MAPCO
F-30K	19725	F-300	19022	F-300	19043
F-301	19069	F-303	19068	F-305	19493
F-307	19017	F-309	19079	F-31	19745
F-313	19024	F-314	19023	F-318	49019
F-320	59011	F-324	49043	F-33K	19749
F-331	49070	F-336	49071	F-336	49072
F-352K	19723	F-354K	19654	F-356	19655
F-357	49737	F-361K	19740	F-361K	49644
F-362K	19724	F-364	19647	F-365	49642
F-366	49643	F-39K	19754	F-40	19748
F-41K	19759	F-42	19750	F-43K	19751
F44	19753	F-45	19752	F-46	19758
F-461	19722/1	F-47	19757	F-500	19026HPS
F-5000	19366	F-502	49039HPS	F-503	19028HPS
F-504K	33009	F-508	49066	F-508	49066HPS
F-510	59024	F-58	19020	F-59	19021
F-61K	19060	F-62	19007	F-62	19059
F-63K	19008	F-64	19053	F-65	19052
F-6514	49060	F-6515	49061	F-66	19055
F-67	19054	F-68	19057	F-69	19056
F-74G	19044	F-75	19045	F-77	19048
F-78	19050	F-79	19051	F-910	19073
F-911	19072	F-912	19067	F-913	19066
F-914	19434	F-914	19077	F-915	19076
F-915	19433	F-915	19431	F-920	49023
F-921	49022	F-922	49025	F-922	49052
F-923	49051	F-923	49024	F-924	49045
F-925	49044	F-926	49065	F-927	49064
F-930N	49042	F-931N	49041	F-932	49083
F-933	49082	F-934	49055	F-935	49054
F-938	49037	F-939	49036	F-940	49079
F-941	49078	F-942	49095	F-943	49094
F-952	19756/1	F-953	19755/1	F-954	19761
F-955	19760	F-956	49097	F-957	49096
F-9900K	49062	F-9901	49063	HO-0002	49269HPS
HO-0003	49268HPS	HO-100	59319	HO-1000	49203
HO-1001	49204	HO-1002	49504	HO-1002	49262
HO-1003	49505	HO-1003	49263	HO-1004	49513
HO-1004	49260	HO-1005	49261	HO-1005	49514
HO-1006	49217	HO-1007	49218	HO-104	19505
HO-105	19504	HO-106	19956	HO-108	19509
HO-108	19501	HO-109	19508	HO-109	19500
HO-112	49265	HO-113	49264	HO-114	59312
HO-115	59313	HO500	59500	HO-5005	59245
HO-501	59501	HO-502	49200HPS	HO-504	49201
HO-505	49202	HO-510	59502	HO-510	59502HPS
HO-511	59503HPS	HO-514	59242	HO-515	59241
HO-528	51542HPS	HO-529	51541HPS	HO-536	59243
HO-537	59244	HO-538	51508HPS	HO-539	51507HPS

Die aufgeführten Vergleichsnummern dienen nur zur besseren Identifikation.
References are only specified for a better identification.
Les références mentionées ne servent qu' á une meilleure identification.

METZGER	MAPCO	METZGER	MAPCO	METZGER	MAPCO
HO-601K	19503	HO-602K	19507	HO-604	49510
HO-7003	51505	HO-900	59331	HO-901	59330
HO-905	49506	HO-907	49205	HO-908	49509
HO-909	49508	HO-910	49210	HO-911	49209
HO-912	49512	HO-913	49511	HO-914	49503
HO-914	59509	HO-915	59508	HO-915	49502
HO-918	59507	HO-919	59506	HO-921	49215
HO-924	49501	HO-925	49500	HO-926	49212
HO-927	49211	HO-928	49214	HO-929	49213
HY-104	19510	HY-106	19512	HY-2000	51209
HY-2200	59291	HY-2201	59292	HY-2203	59376
HY-2204	59377	HY-2205	59378	HY-2206	59379
HY-3900K	59583	HY-4000	59551	HY-500	49251HPS
HY-5000	49254HPS	HY-5000	49254	HY-5005	49252
HY-5006	51241	HY-5007	51242	HY-501	49250HPS
HY-503	49253	HY-506	59355	HY-506	59355HPS
HY-507	59351HPS	HY-507	59351	HY-510	51227
HY-511	51226	HY-610	59580	HY-7020	59581
HY-8000	59582HPS	HY-8600	59584	JE-3360	59933
J4918011	51253	K-3000	51532	K-4150	59589
K-4151	59594HPS	K-4160	59345	K-4161	51230
K-6152	59341HPS	K-8150	59343HPS	MA-108	19595
MA-110	19580	MA-112	19583	MA-116	19589
MA-124	51341	MA-125	51340	MA-2817	59534
MA-4150	51335HPS	MA-4151	51334HPS	MA-4160	51332HPS
MA-4170	49232	MA-501	19593HPS	MA-503	19590HPS
MA-505	19592HPS	MA-506	19516	MA-507	49590
MA-507	49590HPS	MA-512	59388HPS	MA-512	59388
MA-604	19587	MA-610	19585	MA-614	49589
MA-802	49233	MA-804	59369	MA-805	59368
MA-8100	59535HPS	MA-8170	49591HPS	MA-9170	51336
ME-SB10	36987	ME-SB12	33979	ME-SB13	36910
ME-SB2	33973	ME-SB20	37836	ME-SB23	36833
ME-SB25	33883	ME-SB26	36988	ME-SB27	36832
ME-SB4	33944	ME-SB5	33943	ME-SB6	33841
ME-SB7	33936	ME-SB822	37835	ME-SB9	36911
ME002	51855	ME003	51854	ME-0116	49843
ME-0289	59854	ME-0319	33974	ME-0389	59855
ME-0405	49801	ME-0489	59847HPS	ME-0505	59862
ME-0788	59860	ME-0789	59859	ME-0889	59858HPS
ME-0988	59834	ME-0989	59833	ME-100	49824
ME-1001	59903	ME-101	49823	ME-112	49836
ME-114	49830	ME-116	59873	ME-117	59872
ME-118	59841	ME-119	59840	ME-124	51841
ME-124A	59843	ME-125	51840	ME-1389	52815
ME-140	52809	ME-1789	59856	ME-1889	59861
ME-1889	59861HPS	ME-2206	59876	ME-252	49898
ME-252	49899	ME-2689	59857	ME-2689	59857HPS
ME-2806	51857	ME-2807	51856	ME-300	49894

Die aufgeführten Vergleichsnummern dienen nur zur besseren Identifikation.
References are only specified for a better identification.
Les références mentionées ne servent qu' á une meilleure identification.

METZGER	MAPCO	METZGER	MAPCO	METZGER	MAPCO
ME-301	49837	ME-304	59899	ME-306	59844
ME-3606	51859	ME-3607	51858	ME-412	49838
ME-502	19839	ME-504	49827	ME-505	49826
ME-506K	49834HPS	ME-507	59904	ME-508	49840HPS
ME-509	49841HPS	ME-510M	59845	ME-512	49895
ME-512	49895HPS	ME-514	52805HPS	ME-515	52804HPS
ME-518	52806HPS	ME-534	52801	ME-535	52800
ME-536	52814	ME-537	52813	ME-538	49811HPS
ME-539	49812HPS	ME-600K	49825	ME-601K	49839
ME-602	59898	ME-603	49831	ME-604	59902
M-E605	33870	ME-605	59864	ME-606	59832
ME-607	59838	ME-610	51834	ME-612	51847
ME-7001	59900	ME-7276	52803	ME-7277	52802
ME-800	59884	ME-801	59885	ME-802	59882
ME-803	59881	ME-804	51838	ME-805	51837
ME-806	51836	ME-807	51835	ME-808	51833
ME-809	51832	ME-816	59874	ME-817	59878
ME-819	59877	ME-822	51881	ME-823	51880
ME-900	49816	ME-9007	59880	ME-9008	59879
ME-901	49815	ME-906	49804	ME-907	49803
ME-910	49822	ME-911	49821	ME-9115	49833
ME-912	49809	ME-913	49808	ME-916	49814/2
ME-917	49814/1	ME-918	49820	ME-919	49819
ME-924	59802	ME-925	59801	ME-928	51853
ME-929	51852	ME-930	51831	ME-931	51830
MI-1000	49540	MI-1001	49541	MI-108	49256
MI-1732	59543HPS	MI-2117	49245	MI-2981	59541HPS
MI-2982	51546	MI-2983	51545HPS	MI-3419	59283
MI-3420	59284	MI-3926	51549	MI-4521	51543
MI-4522	51544	MI-501	19544	MI-502	19543HPS
MI-502	59204	MI-502	59542	MI-7876	59546
MI-7877	59547	MI-8000K	49226HPS	MI-8076	59511HPS
MI-8077	59510HPS	MI-8077	59510	MI-8780	59540HPS
MI-9355	59309	M-SB 952	33950	M-SB1	33006
M-SB2	33001	M-100K	49800	M-102	49806
M-103	49805	M-13	19838	M-16	19842
M-17	19843	M-18	19844	M-21	19832
M-22	19820	M-23	19819	M-24	19818
M-25	19817	M-251	19837	M-260	19829
M-262	19830/1	M-262	19831/1	M-306	19846
M-306	19669	M-308	49807	M-3100	19821
M-311	19847	M-311	19849	M-315	19824
M-315	19848	M-315	19827	M-331	19973
M-365	19828	M-366	49891	M-367K	49802
M-53K	19962	M-54	19961	M-6317	49813
M-700	19405	M-702	19448	M-74	19420
M-75K	19421	M-76K	19422	M-77	19406
M-78	19407	M-82	19447	M-83	19099
M-85AK	19498	M-85K	19449	M-86AK	19499

Die aufgeführten Vergleichsnummern dienen nur zur besseren Identifikation.
References are only specified for a better identification.
Les références mentionées ne servent qu' á une meilleure identification.

METZGER	MAPCO	METZGER	MAPCO	METZGER	MAPCO
M-86K	19450	M-87	49099	M-88	19497
M-89	19496	M-900A	49085	M-900A	19462
M-901A	49084	M-901A	19461	M-902	19464
M-902A	49087	M-903	19463	M-903A	49086
M-906	19442	M-907	19441	M-908	19469
M-909	19468	M-911	19494	M-912	19495
M-954	19972	M-955	19971	P-SB1	33416
P-SB12	33316	P-SB14	33320	P-SB15	33322
P-SB16	33319	P-SB17	33318	P-SB18	33434
P-SB19	33336	P-SB19	33317	P-SB2	33417
P-SB4	33307	P-SB5	33314	P-SB6	33313
P-SB9	33306	P-SB926A	33436	P-SB926B	33435
P-10K	19301	P-100	19342	P-101	19341
P-102	19381	P-103	19382	P-104	19393
P-105	19392	P-1061	59012	P-132	49307
P-133	49306	P-134	49313	P-135	49312
P-21	19428	P-22K	19307	P-28	19312
P-28	19415	P-29AK	19371	P-29K	19319
P-30K	19320	P-302	19410	P-302	19355/1
P-306	19340	P-31	19425	P-314	19325
P-314	19326	P-314	19324	P-316	19336/1
P-320	19353	P-322	19373	P-326	19380
P-328	19395	P-334	49314	P-34	19310
P-35	19311	P-38	19314	P-38	19318
P-39	19313	P-39	19317	P-402K	19354
P-402K	19335	P-402K	19446/1	P-406K	19340/1
P-41K	19417	P-416	19336	P-42K	19418
P-425	19379	P-43K	19324/1	P-43K	19315
P-44K	19316	P-44K	19325/1	P-45	19372
P-46	19394	P-47	49309	P-500	19337HPS
P-5000	19363	P-5002K	49308	P-501	19348HPS
P-502	19339HPS	P-503	19338HPS	P-504	19476HPS
P-505	19375HPS	P-506	19362HPS	P-506	19376HPS
P-508	19369HPS	P-509	19370HPS	P-510	19365
P-511K	49303	P-512	19397	P-513	19396
P-514	49305HPS	P-515	49304HPS	P-7839	19368HPS
P-8122	49315	P-8742	19367	P-900	19322
P-901	19321	P-902	19347	P-9020	49317
P-9021	49316	P-903	19346	P-904	19332
P-905	19331	P-905A	19331/1	P-906	19475/1
P-914	19330	P-916	19345	P-917	19344
P-918	19384	P-919	19383	P-920	19488
P-921	19487	P-922	49321	P-923	49320
P-924	49319	P-925	49318	P-926	49311
P-927	49310	R-SB10	33148	R-SB11	33147
R-SB13	33171	R-SB20	33120	R-SB22	33121
R-SB23	33122	R-SB4	33144	R-SB5	33143
R-SB6	33130	R-SB7	33129	R-SB9	33146
R-SB938B	36705	R-SB958	33124	RV-0171	59687

Die aufgeführten Vergleichsnummern dienen nur zur besseren Identifikation.
References are only specified for a better identification.
Les références mentionées ne servent qu' á une meilleure identification.

METZGER	MAPCO	METZGER	MAPCO	METZGER	MAPCO
RV-0230	59684	RV-1810	51691	RV-1811	51690
RV-1888	59678	RV-2441	59688	RV-3304	59679
RV-4000	59698	RV-4001	59697	RV-500	19957
RV-501	59516HPS	RV-502	59518HPS	RV-503	59517HPS
R0-191	49121HPS	R0-191	49121	R0-192	49120
R0-192	49120HPS	R-103K	19102	R1041K	19123
R-1051K	19122	R-106K	19108	R-107K	19109
R-108K	19105	R-118K	19116	R-122	49139
R-126	19143	R-128	49116	R130	19131
R131K	19132	R132K	19127	R-133K	19128
R-135K	19135	R-136K	19136	R-138	19181
R-138	19170	R-138	49101	R-139	49100
R-139	19169	R-139	19180	R-140	19190
R-141	19189	R-144	49113	R-145	49112
R-146	49104	R-152	49136	R-153	49135
R-154K	49148	R-155K	49147	R-199	49110
R20K	19133	R-21K	19134	R-2113	19195
R22K	19130	R-23K	19130/1	R-24	19140
R-25	19139	R-26	19142	R-27	19141
R-2734	51117/1	R-28	19145	R-29	19144
R-302	49107	R-302	19166	R-318	19153
R-320	19150/1	R-324	19149	R-324	19159
R-326	19156	R-326	19161	R-330	49103
R-330	19171	R-332	49102	R-332	19176
R-334	19194	R-336	19193	R-340	19183
R-342	49114	R-342	49115/1	R-350	49119
R-352	49126	R-354	49149	R-356	49145
R-358	49159	R-360	49194	R-410	19107
R-411	19198	R-411	19126	R-419	19174
R-419	19154	R-420K	19150	R-421K	19151
R-425	19160	R-427	19156/1	R-430	19173
R-431	19172	R-433	19175	R-438	19182
R-442	49115	R-500	19164HPS	R-500	19164
R-501	49124HPS	R-502	49118	R-502	49118HPS
R-5760	49127	R-5761	49128	R-7136	49146HPS
R7-382	33172	R-8406	49161	R-908	19163
R-909	19162	R-910	19125	R-911	19124
R-920	19148	R-921	19147	R-922	19138
R-923	19137	R-924	19158	R-925	19157
R-926	19197	R-927	19196	R-930	19178
R-931	19177	R-932	19187	R-933	19186
R-940	19168	R-941	19167	R-942	49130
R-943	49129	R-948	49134	R-949	49133
R-950	49132	R-951	49131	R-958	49190
R-959	49191	SZ-100	59320	SZ-1000	49292
SZ-1002	49595	SZ-1004	19518	SZ-102	59201
SZ-104	49562	SZ-200	49561	SZ-2003	51255
SZ-602	49293	SZ-604	59324	SZ-6201	51252
T-0021	19572	T-0040	51379HPS	T-0041	51378HPS

Die aufgeführten Vergleichsnummern dienen nur zur besseren Identifikation.
References are only specified for a better identification.
Les références mentionées ne servent qu' á une meilleure identification.

METZGER	MAPCO	METZGER	MAPCO	METZGER	MAPCO
T-0042K	51374HPS	T-1000K	49574	T-1002K	49257
T-1003K	49258/1	T-1003K	49258	T-1004	49550
T-1005	49551	T-118	19560	T-122	49567
T-123	49566	T-124	59277	T-125	59281
T-126	59561	T-127	59560	T-134	51381
T-135	51380	T-136	59380/1	T-136	59380
T-2010	49274HPS	T-2080	51560	T-2081	51561
T-2179	51391	T-3010	51373HPS	T-3201	51597HPS
T-4001	19576	T-4002	19575	T-500	49271HPS
T-500	19578	T-5001	59361	T-5001	49283HPS
T-5001	49283	T-5001	49284HPS	T-5001	59361HPS
T-5002	49284	T-5002	59362	T-5002	59362HPS
T-501	49270HPS	T-501	19577	T-502	19574
T-5020	51377HPS	T-503	19573	T-5030	51569
T-5032	51570	T-505	51577HPS	T-506	51372
T-507	51371	T-508	49237HPS	T-508	49237
T-510	49239	T-511	49238	T-512	51392
T-614	19562	T-614	19569	T-616	59565
T-620	19571	T-620	19563	T-622	49552
T-624	59562	T-624	49568	T-900	49569
WM-G 100	33690	WM-G 100	33690/2	WM-G 101	33692
WM-G 101	33692/2	WM-G 102	33693	WM-G 102	33693/2
WM-G 103	36661	WM-G 109	36664	WM-G 110	36666
WM-G 111	36665	WM-G 115	33934	WM-G 120	33639
WM-G 121	36662	WM-G 122	33638	WM-G 126	33689
WM-G 136	33694/2	WM-G 136	33694	WM-G 201	33321
WM-G 203	33329	WM-G 204	33330	WM-G 212	33326
WM-G 214	33333	WM-G 227	33403	WM-G 301	33628
WM-G 302	33645	WM-G 307	33674	WM-G 308	33629/2
WM-G 311	33671	WM-G 314	33675	WM-G 318	33643
WM-G 319	33670	WM-G 321	33631	WM-G 322	33630
WM-G 327	33644	WM-G 335	33678	WM-G 351	49889
WM-G 352	49888	WM-G 353	33867	WM-G 358	36924
WM-G 3617	37837	WM-G 362	36947	WM-G 362	33946
WM-G 365	37838	WM-G 367	33972	WM-G 368	36899
WM-G 369	36971	WM-G 371	33942	WM-G 372	33865
WM-G 374	33836	WM-G 374	33837	WM-G 374	33838
WM-G 375	33841/4	WM-G 377	33845	WM-G 387	36909
WM-G 388	33947	WM-G 396	36916	WM-G 397	59831
WM-G 400	33520	WM-G 400	33223	WM-G 420	33563
WM-G 430	33922	WM-G 445	36908	WM-G 449	33910
WM-G 463	37833	WM-G 465	36972	WM-G 475	36838
WM-G 570	33511	WM-G 571	33503	WM-G 574	33502
WM-G 575	33501	WM-G 600	33737	WM-G 603	33734
WM-G 609	33879	WM-G 610	33787	WM-G 612	33739
WM-G 613	33730	WM-G 616	33736	WM-G 618	33729
WM-G 619	33720	WM-G 623	33786	WM-G 625	33740
WM-G 626	33735	WM-G 628	33758	WM-G 629	33756
WM-G 633	33785	WM-G 641	33895	WM-G 642	33795

Die aufgeführten Vergleichsnummern dienen nur zur besseren Identifikation.
References are only specified for a better identification.
Les références mentionées ne servent qu' á une meilleure identification.

METZGER	MAPCO	METZGER	MAPCO	METZGER	MAPCO
WM-G 643	33762	WM-G 645	33753	WM-G 649	33766
WM-G 704	33104	WM-G 705	33128	WM-G 750	49160
WM-G 800	33913	WM-G 801	33915	WM-G 8010	36776
WM-G 802	33872	WM-G 803	33914	WM-G 804	33916
WM-G 805	33909	WM-G 808	33833	WM-G 825	36904
WM-G 826	33871	WM-G 828	33858	WM-G 834	33833/2
WM-G 835	33858/2	WM-G 847	33871/4	WM-G 848	33909/4
WM-G 851	33941	WM-G 855	33896	WM-G 862	33864
WM-G 864	33824	WM-G 865	33905	WM-G 868	33859
WM-G 869	33828	WM-G 871	33904	WM-G 885	33925
WM-G 886	33926	WM-G 887	33948	WM-G 888	33949
WM-G 889	33939	WM-G 890	33940	WM-G 891	49862/9
WM-G 893	33937	WM-G 894	33808	WM-G 947	36775
WM-G350	49890	WM-G703	33164	WM-S 701	33118
1-SB5	33007	1-SB7	33010	1-SB9	33008
1-SB912C	33049	1-SB912D	33048	1-102	19030
1-103	19029	1-104	59015	1-105	59014
12-400	49047	12-401	49048	1-304	19016
1-306	49053	1-3076	49068	1-308	19018
1-4514	49046	1-500	49030HPS	1-501	49032HPS
1-504	49031	1-506	59016	1-507	59017
1-508	59021	1-509	59020	1-71	19009
1-72	19010	1-79K	49050	18-200	49033
18-201	49034	1-90	19014	1-900	49029
1-901	49028	1-902	49026	1-903	49027
1-904	19032	1-905	19031	1-906	49081
1-907	49080	1-908	59019	1-909	59018
1-91	19013	1-912	59023	1-913	59022
1-97	19836	1-98	59897	1-98	51850
2-500	49088	2-600	49014	5-SB10	33731
5-SB11	33716	5-SB12	33715	5-SB13	33848
5-SB14	33849	5-SB16	33768	5-SB17	33796
5-SB2	33733	5-SB21K	36703	5-SB3	33752
5-SB3460	33714/9	5-SB4	33757	5-SB5	33725
5-SB6K	33714	5-SB7	33732	5-SB7	33788
5-SB8	33794	5-SB926A	33044	5-0146	49752
5-0146	49750	5-0147	49751	50-260K	33726
50-261K	33727	50-577	49604	5-0618	49777
5-0781	49753	5-104	19626	5-104	19637
5-108	19816	5-110	19638	5-115	19631
5-116	49759	5-119	49758	5-120	49611
5-122	49627	5-124	49742	5-125	49743
5-126	49626	5-128	49138	5-129	49137
5-130	49144	5-131	49143	5-132	49619
5-133	49618	5-136	49621	5-137	49620
5-138	59013	5-1910	49156	5-200	19803/1
5-201	19804/1	5-202	19813	5-203	19812
5-300	19805	5-301	49754	5-303	49755
5-308	19628	5-308	19627	5-3121	33877

Die aufgeführten Vergleichsnummern dienen nur zur besseren Identifikation.
References are only specified for a better identification.
Les références mentionées ne servent qu' á une meilleure identification.

METZGER	MAPCO	METZGER	MAPCO	METZGER	MAPCO
5-314	49602	5-316	19810	5-318	49603
5-320	49125	5-322	49155	5-332	49622
5-4065	51594HPS	5-4065	51594	5-4087K	49779
5-412	49607	5-500	19600HPS	5-500K	19621
5-501	19639	5-503	19602HPS	5-503	19606HPS
5-504K	19607	5-504K	19607/8HPS	5-506	59849
5-507	19811	5-507	19811HPS	5-508	49108HPS
5-509	49109HPS	5-513	49749HPS	5-589	49601
5-59	19800	5-601K	19632	5-602	49610
5-603	49744	5-6030	59770	5-604	49745
5-606	49111	5-610	49092	5-6247	51302
5-6248	51303	5-64	19718	5-65	19719
5-66K	19714	5-67K	19801	5-77	19610
5-78	19611	5-79K	19802	5-79K	19612
5-85	19717	5-86	19613	5-87	19614
5-88	49600	5-88	19615	5-89	19616
5-8958	49142	5-8959	49141	5-90DK	19618
5-900K	19620	5-901K	19619	5-902	19807
5-903	19806	5-904	19809	5-905	19808
5-906	49757	5-907	49756	5-908	19634
5-909	19633	5-910	19623	5-911	19622
5-913	19624	5-914	19630	5-915	19629
5-916	19636	5-9161	51251	5-917	19635
5-918	49609	5-919	49608	5-9195	51250
5-920K	49624	5-921K	49623	5-922	49615
5-923	49614	5-924	49613	5-925	49612
5-926	19098	5-927	19097	6-SB1	33893
6-SB10	33835	6-SB12	33818	6-SB13	33908
6-SB14	33928	6-SB18	33891	6-SB20	33892
6-SB21	33878	6-SB24	36938	6-SB25A	36939
6-SB26	33842	6-SB29	36950	6-SB3	33819
6-SB30	36949	6-SB31	36948	6-SB33	33987
6-SB4	33903	6-SB5	33876	6-SB6	33839
6-SB7	33840	6-SB7190	33818/9	6-SB8	33932
6-SB818	36778	6-SB818	36777	6-SB9	33834
6-0017	59852HPS	6-0018	59853HPS	6-104S	19858
6-1049	49851	6-1050	49863	6-106K	19869
6-107	19868	6-108	19882	6-109	19873
6-110	49701	6-110A	59896	6-111	49700
6-111A	59895	6-112	49718	6-112A	19693
6-113	49717	6-113A	19692	6-1131K	51862
6-1132	51821	6-114K-3	49707HPS	6-114K-3	49707OES
6-114MK-3	59707OES	6-115K	49859	6-1150	51732
6-1151	51731	6-116	49858	6-117	49857
6-118	49872	6-118	19886	6-119	49871
6-119	19885	6-120	59817	6-122	51823
6-123	51822	6-124	19880	6-125	19859
6-126	51712	6-127	51711	6-132	59815
6-133	59814	6-138	59807	6-139	59806

Die aufgeführten Vergleichsnummern dienen nur zur besseren Identifikation.
References are only specified for a better identification.
Les références mentionées ne servent qu' á une meilleure identification.

METZGER	MAPCO	METZGER	MAPCO	METZGER	MAPCO
6-142	51721	6-150A	51741	6-151A	51740
6-151A	51826	6-152	51720	6-1529	49716
6-153	51719	6-1541	33912	6-156	51743
6-157	51742	6-162	51735	6-200	49762
6-201	49761	6-202	49763	6-280041	49874
6-28031	49873	6-308K	52719	6-308K	19863
6-312K	19860	6-314A	49674	6-314A	19682
6-320	49690	6-322	49738	6-324	49866/1
6-326	19688	6-328	19696	6-328	19696/1
6-332	49766	6-338	51713	6-344A	59891
6-346A	59808/1	6-350	51723	6-352	51722
6-356	51744	6-360	52810	6-400	19891
6-402	19892	6-403	19888	6-404	19871
6-405	19872	6-408	19862	6-413	19861
6-415A	19683	6-415A	49675	6-416	49767
6-416B	49774	6-417B	49773	6-419	19865
6-420	49691	6-420A	49870	6-421A	49869
6-422	49732	6-424	49866/2	6-425	49866
6-426	19689	6-428	19697	6-430	49693
6-431	49692	6-438	51714	6-445A	59892
6-446	59809	6-447	59808	6-456	51746
6-457	51745	6-5000	49686	6-501	19603HPS
6-502	49682	6-502	49685OES	6-503M	49867
6-503P	49868	6-504	49794	6-505	49793
6-506	49856HPS	6-507	59893	6-508K	49684/1OES
6-508K	49684OES	6-509K	49683OES	6-509K	49683/1OES
6-510	59894	6-511	59812HPS	6-512	49689
6-513	49688	6-514K	49862	6-515K	49850
6-516	19853HPS	6-517	59820	6-518K	49860
6-519K	51829HPS	6-52K	19898	6-520K	52713
6-521K	52712	6-522	51825HPS	6-523	51718HPS
6-526K	52711	6-53K	19897	6-5317	51824
6-5323	52718	6-5351	51870	6-5352	51871
6-54K	19883	6-54651	49714	6-55	19884
6-5547	49729	6-5548	49715	6-56K	19680
6-57K	19681	6-58K	19684	6-59K	19685
6-60K	19857	6-600K	49703/1	6-600K	49703
6-601K	49702	6-601K	49702/1	6-602K	49861
6-604K	19896/1	6-604K	19896	6-605K	19895/1
6-605K	19895	6-606K	19851	6-607K	19852
6-610	59811	6-611	59810	6-614	51725
6-615	51724	6-62K	19893	6-63K	19894
6-66	19867	6-67	19866	6-69	19679
6-6910	51734	6-6911	51733	6-8VAG4	59827
6-8VAG4	59827/1	6-8VAG5	59826/1	6-8VAG5	59826
6-8VAG6	59828	6-8VAG6	59828/1	6-800	19695
6-801	19694	6-802A	49681OES	6-803A	49680OES
6-804A	49792OES	6-805AK	49791OES	6-806K	49710OES
6-807K	51710OES	6-808K	49709OES	6-809K	49708OES

Die aufgeführten Vergleichsnummern dienen nur zur besseren Identifikation.
References are only specified for a better identification.
Les références mentionées ne servent qu' á une meilleure identification.

METZGER	MAPCO	METZGER	MAPCO	METZGER	MAPCO
6-810	49713OES	6-814K	51877	6-815K	51876
6-816K	51879	6-817K	51878	6-818AK	51875
6-818K	51873	6-819AK	51874	6-819K	51872
6-82	19878	6-820A	51737	6-820K	52710
6-822K	51739	6-823K	51738	6-83K	19879
6-83K3	19879/1	6-84	19874	6-86K	19876
6-87	19877	6-88	19890	6-89K	19889
6-89K3	19889/1	6-900	19870	6-906	49770/1
6-906	49770	6-907	49769/1	6-907	49769
6-910	49776	6-911	49775	6-912	49706/1
6-912	49706	6-913	49705	6-914	49704/1
6-915	49704/2	6-915	49704	6-916	51819
6-917	51819/1	6-918	19686/1	6-92	19850
6-920	19690	6-928	49877	6-929	49876
6-930	49665	6-931	49664	6-936	59813
6-937	59813/1	6-938	51716	6-939	51715
6-940	51727	6-941	51726	6-946G	52715
6-947A	52714	6-95	19854	6-9801	49789
6-9802	49790	7-SB1	33691	7-SB1A	36668/2
7-SB1A	36687/2	7-SB14	33875/1	7-SB14	33875
7-SB15	33847	7-SB17K	36660	7-SB18	33933
7-SB2	33641	7-SB2	33641/2	7-SB4	33666
7-SB6	36669/2	7-SB6	36669	7-0504	59622
70-905	49655	70-906	49656	7-100	19783
7-101	19782	7-102	49740	7-103	49739
7-104	49654	7-105	49653	7-106	49736
7-107	49735	7-1079	51642HPS	7-108	59691
7-1080	51643HPS	7-109	59690	7-110	59600
7-112	59626	7-122	51668	7-123	51667
7-1620	51647	7-200	19675	7-2237	59638
7-300	49746	7-300	49722	7-306	49783
7-308A	19676	7-310	59693	7-322A	51654
7-3699	51634	7-3700	51635	7-401	49721
7-404	49781	7-405	49780	7-406	49782
7-408	19785	7-409	19784	7-411	59692
7-412	59610	7-412	59601	7-414	51638
7-422	51656	7-422A	51666	7-4226	49730
7-423	51655	7-423A	51665	74-315	49658
74-331	49660	7-500	19678HPS	7-501	19667HPS
7-502	19700HPS	7-503	49726	7-503	49726HPS
7-504	49725HPS	7-504	49725	7-505	49795HPS
7-507	59628HPS	7-508	59695	7-510	49786
7-511	49787	7-512	49799	7-513	51659
7-514	49788	7-516M	49663HPS	7-517	49796
7-518	59604HPS	7-518	59604	7-519	59603
7-519	59603HPS	7-520	59614HPS	7-521	59694
7-522	51645	7-523	51644	7-524	51646
7-526	59631HPS	7-527	59623HPS	7-528	59632
7-530	51640HPS	7-531	51639HPS	7-531	51639

Die aufgeführten Vergleichsnummern dienen nur zur besseren Identifikation.
References are only specified for a better identification.
Les références mentionées ne servent qu' á une meilleure identification.

METZGER	MAPCO	METZGER	MAPCO	METZGER	MAPCO
7-532	51641HPS	7-533	59605HPS	7-534	51658
7-535	51657	7-5411	59611	7-5412	59612
7-600	51662	7-601	51661	7-603	59602
7-604	51660	7-6057	49741	7-6059	59624
7-68	19674	7-69	19673	7-70	19660
7-71	19661	7-72	19662	7-7203	59613HPS
7-73	19663	7-74	19664	7-75	19666HPS
7-75M	19666/1	7756 218	33040	7-78	19665
7-800	49724	7-801	49723	7-802	49695
7-803	49694	7-804	49662	7-805	49661
7-808A	19699	7-809A	19698	7-81	19668
7-810	49728	7-811	49727	7-812	49651
7-813A	49650	7-814	59618	7-815	59617
7-816	59616	7-817	59615	7-818	49679
7-819	49678	7-820	59620	7-821	59619
7-822	49652	7-826	59609	7-827	59608
7-828	59607	7-829	59606	7-830	51637
7-831	51636	7-832	59634	7-833	59633
7-834	51633	7-835	51632	7-836	59630
7-837	59629	7-840	51631	7-841	51630
7-844	59636	7-845	59635	7-846	59637
7-848	51649	7-849	51648	7-852	51652
7-853	51650	7-854	51651	7-900	49734
7-901	49733	7-902M	19671HPS	7-903	19670HPS
7-906	51664	7-907	51663	7-94N	19727
8-304	49606	8-81	19982	8-86	19981
8-8944	49980	8-92K	19983	8-96K	19980
8-98	19985	8-99	19984	9-0304	19938
9-112	49922	9-113	49921	9-114	19547
9-114	59203	9-114	19540	9-115K	49578
9-115K	49255	9-116	49924	9-118	49966
9-119	49965	9-2103	49909	9-310	49928
9-312	49944	9-314	49900	9-316	49942
9-318	49917	9-319	49954	9-320	49910
9-326	49964	9-326	49927	9-500	49902HPS
9-501	49901HPS	9-502	49905HPS	9-503	19914HPS
9-504K	19913	9-505	49906HPS	9-506	49947
9-506	49947HPS	9-508	49916HPS	9-80	19906
9-81	19909	9-82	19908	9-86K	19901
9-87K	19902	9-88	19911	9-89	19910
9-90K	19907	9-900	49545	9-900	49908
9-901	49907	9-901	49544	9-902	49913
9-9021	49915	9-903	49912	9-9031	49914
9-904	49920	9-905	49919	9-9253	19937HPS
9-9253	19937	9-9541	49958	9-9542	49959
9-9543	49962	9-9544	49963	9-991	19912

MEYLE	MAPCO	MEYLE	MAPCO	MEYLE	MAPCO
014 032 0067	49812HPS	014 032 0068	49811HPS	014 033 0043	36919
014 033 0090	33883	014 033 0094	37834	014 033 0115/HD	36987

Die aufgeführten Vergleichsnummern dienen nur zur besseren Identifikation.
References are only specified for a better identification.
Les références mentionées ne servent qu' á une meilleure identification.

MEYLE	MAPCO	MEYLE	MAPCO	MEYLE	MAPCO
014 033 0150	33977	014 033 0157	36988	014 035 0011	36924
014 035 0017	59830	014 035 0017	59830/1	014 035 0026	36973
014 035 0035	36971	014 035 0043	36972	014 035 0046	36923
014 035 0061	36920	014 035 0084	36989	014 035 0085	36838
016 003 50038	19817	016 010 0006/HD	59838	016 010 0009	51882
016 010 0010	51847	016 010 0234	19844	016 010 6301	19828
016 010 6313	59864	016 010 6313	33870	016 020 0002	59843
016 020 0213	19836	016 020 3082	19840	016 020 3083	19841
016 020 3095	19823	016 020 3096	19827	016 020 3096	19824
016 020 3098	19826	016 020 6129	19846	016 020 6304	59897
016 020 6305	19848	016 020 6310	19849	016 020 6310	19847
016 020 6322	19833	016 030 3094	19822	016 030 3097	19825
016 030 6128	19829	016 030 6308	19830/1	016 030 6320	19837
016 0306 309	19831/1	016 031 0002	59844	016 035 0010	51856
016 035 0011	51857	016 035 0012	51858	016 035 0013	51859
016 035 0038	19818	016 035 0039	19819	016 035 0040	19820
016 039 1401	59878	016 0396 300	19832	016 040 0001	59862
016 040 3100	19821	016 040 6061	19838	016 040 6306	19845
016 040 6329	49801	016 050 0019	51854	016 050 0020	51855
016 050 0033	51836	016 050 0035	51852	016 050 0036	51853
016 050 2101 HD	49808	016 050 2102 HD	49809	016 050 2103	49803
016 050 2103/HD	49803	016 050 2104/HD	49804	016 050 3077	19842
016 050 3078	19843	016 060 0001/HD	49834HPS	016 060 0002/HD	49895HPS
016 060 0003	59847HPS	016 060 0007	59858HPS	016 060 0025/HD	52806HPS
016 060 0030/HD	52804HPS	016 060 0031/HD	52805HPS	016 060 0038	52813
016 060 0223	19839	034 032 0008	36926	034 032 0046	37837
034 032 0048	49843	034 032 0053	36947	034 032 0066	36925
034 032 0067	37838	036 010 0113/HD	49831	036 020 0018	49830
036 060 0000/HD	52800	036 060 0001/HD	52801	036 060 0268/HD	49841HPS
036 060 0368/HD	49840HPS	036 060 0389	59855	100 199 0085	36948
100 199 0086	36949	100 407 0020	33820	100 407 0022/HD	33840
100 407 0024/HD	33876	100 407 0049	33818	100 407 0054	33913
100 407 0060/HD	36777	100 407 0060/HD	36778	100 407 0073	36772
100 407 0073/HD	36772	100 407 0077	36939	100 407 0085	33818/9
100 407 0086	36950	100 407 0090	33872	100 407 0094	36938
100 411 0002/C	49850	100 411 0005/S	51862	100 411 0006	49868
100 411 0007	49867	100 411 0008	49862	100 411 0009	51821
100 411 0010	49862/9	100 411 0018	33843	100 411 0021	33939
100 411 0042/S	51861	100 501 0013/S	33912/2	100 501 0016	33908
100 501 0018	33988	100 501 0019	33902	100 511 0009	36941
100 610 0014	33987	100 710 0002	36775	100 710 0003	36776
111 601 00002	19368HPS	111 601 00007	19371	111 601 04077	19421
111 601 04087	19422	111 601 04249	19312	111 601 06908	19319
111 601 06909	19320	111 602 00003	19342	111 602 00004	19341
111 602 04078	19420	111 602 05042	19078	111 602 05721	19324/1
111 602 05722	19325/1	111 602 07529	19447	111 603 00001	19443
111 603 05747	19324	111 603 05749	19446/1	111 603 06294	19335
111 603 06902	19326	111 603 06903	19325	111 603 06907	19336/1
111 603 06907	19336	111 603 10001	19373	111 605 00000	19345

Die aufgeführten Vergleichsnummern dienen nur zur besseren Identifikation.
References are only specified for a better identification.
Les références mentionées ne servent qu' á une meilleure identification.

MEYLE	MAPCO	MEYLE	MAPCO	MEYLE	MAPCO
111 605 00003	19475/1	111 605 00003	19438	111 605 00007	19347
111 605 00008	19346	111 605 00016	19344	111 605 03196	19318
111 605 03196	19314	111 605 03197	19317	111 605 03197	19313
111 605 03198	19310	111 605 03199	19311	111 605 06979	19322
111 605 06980	19321	111 606 00003	19451HPS	111 606 00007	19364
111 606 00009	19365	111 606 05041	19338HPS	111 606 05707	19339HPS
111 606 06970	19337HPS	111 606 06970	19367	11-14 035 2375	33417
11-14 610 0007	33001	11-14 610 0013/HD	33336	11-14 610 0015/HD	33416
11-14 610 0016/HD	33434	11-14 610 0020	33435	11-16 010 0000	19372
11-16 010 0004	19450	11-16 010 0005	19449	11-16 010 0008	19473
11-16 010 0011	19499	11-16 010 0013	19491	11-16 010 3195	19307
11-16 010 3347	19425	11-16 010 3356	19428	11-16 010 4249	19415
11-16 020 0005	19381	11-16 020 0006	19382	11-16 020 0009	49312
11-16 020 0010	49313	11-16 020 0011	19477	11-16 020 0012	19478
11-16 020 0017	49306	11-16 020 5042	19430	11-16 020 5703	19301
11-16 020 5721	19315	11-16 020 5722	19316	11-16 030 0001	19411
11-16 030 5749	19410	11-16 030 7528	19448	11-16 031 0002	19484
11-16 031 0006	49400	11-16 031 0007	49314	11-16 031 0015	19379
11-16 031 0017	19353	11-16 050 0003/HD	19475	11-16 050 0003/HD	19332
11-16 050 0004/HD	19474	11-16 050 0004/HD	19333	11-16 050 0004/HD	19331
11-16 050 0009/HD	19384	11-16 050 0010/HD	19383	11-16 050 0013	19434
11-16 050 0019	19385	11-16 050 0020	19386	11-16 050 0023	19433
11-16 050 0030	49321	11-16 050 0031	49320	11-16 050 0034	49309
11-16 050 0052	49311	11-16 050 0053	49310	11-16 060 0000	19375HPS
11-16 060 0001	19348HPS	11-16 060 0002/HD	19362HPS	11-16 060 0010	19476HPS
11-16 060 0016/HD	49303	11-16 060 0019	49308	114 710 0009	33912
116 010 0007	59810	116 010 0008	59811	116 010 0009	49861
116 010 0012/HD	51721	116 010 0015	51724	116 010 0016	51725
116 010 3030	19857	116 010 3245	19852	116 010 3246	19851
116 010 3254	19876	116 010 3269	19884	116 010 3270	19883
116 010 3917	19893	116 010 3918	19894	116 010 7001	49859
116 010 7108	19879/1	116 010 7154	19889/1	116 010 7168	19898
116 010 7170	19680	116 010 7172	19897	116 010 7174	19681
116 010 7175	19684	116 010 7177	19685	116 010 7184	19679
116 010 7192	19868	116 010 7193	19869	116 010 8223	19962
116 010 8248	19896	116 010 8249	19895	116 010 8287	49702/1
116 010 8287	49702	116 010 8288	49703	116 010 8288	49703/1
116 010 9001	51800	116 010 9002	51801	116 020 0000	59806
116 020 0004	59807	116 020 0005	51742	116 020 0006	51743
116 020 0008/HD	59707OES	116 020 0016	51740	116 020 0020/HD	51735
116 020 0021	51720	116 020 0022	51719	116 020 0025	51826
116 020 0026	51827	116 020 0026	51741	116 020 3026	19850
116 020 3226	19874	116 020 3916	19890	116 020 7106	19878
116 020 7139	19877	116 020 7149	49717	116 020 7150	49718
116 020 8122	51822	116 020 8123	51823	116 020 8201	59815
116 020 8201	19882	116 020 8206	19692	116 020 8207	19693
116 020 8215	19859	116 020 8216	19866	116 020 8217	19880
116 020 8218	19867	116 020 8222	19961	116 020 8228/HD	49707HPS
116 020 8228/HD	49707OES	116 020 8246	49872	116 020 8246	19886

Die aufgeführten Vergleichsnummern dienen nur zur besseren Identifikation.
References are only specified for a better identification.
Les références mentionées ne servent qu' á une meilleure identification.

MEYLE	MAPCO	MEYLE	MAPCO	MEYLE	MAPCO
116 020 8247	19885	116 020 8247	49871	116 020 8255	59814
116 020 8255	19873	116 020 8260/HD	49858	116 020 8261/HD	49857
116 020 8262	59817	116 020 8283	59895	116 020 8285	59896
116 020 8502	49700	116 020 8503	49701	116 030 0010	59808
116 030 0011	59809	116 030 0013	51745	116 030 0014	51746
116 030 3224	19891	116 030 3238	51806	116 030 3268	19887
116 030 3924	49761	116 030 4680	49738	116 030 7105	19888
116 030 7137	19860	116 030 7140	19861	116 030 7142	19892
116 030 7156	19872	116 030 7158	19682	116 030 7160	19683
116 030 7180	19862	116 030 7182	19863	116 030 7190	49873
116 030 7197	49763	116 030 8202	19864	116 030 8203	19865
116 030 8204	49672	116 030 8205	49673	116 030 8227 HD	49732
116 030 8231	49789	116 030 8232	49790	116 030 8244	19689
116 030 8245	19688	116 030 8250	49774	116 030 8251	49773
116 030 8260/HD	49866/2	116 030 8261/HD	49866	116 030 8261/HD	49866/1
116 030 8264	49674	116 030 8265	49675	116 030 8271	19696
116 030 8272	19697	116 030 8275	19696/1	116 030 8281	49869
116 030 8284	49870	116 030 8289	49692	116 030 8290	49693
116 030 8311	49766	116 030 8312	49767	116 030 8500	49690
116 030 8501	49691	116 0307 191	49874	116 031 0000	51723
116 031 0002	19973	116 031 0003	19968	116 031 0004	51722
116 031 0009	51736	116 031 0010	59808/1	116 031 0016	51744
116 031 0024	59899	116 035 0000	49716	116 039 8294	59893
116 040 3253	51805	116 040 3925	49762	116 050 0000/HD	51710OES
116 050 0005	19971	116 050 0006	19972	116 050 0007/HD	49877
116 050 0008/HD	49876	116 050 0013	19854	116 050 0015/HD	51878
116 050 0016/HD	51879	116 050 0017	52716	116 050 0020	59822/1
116 050 0020	59822	116 050 0020/HD	59819/2	116 050 0020/HD	59819/1
116 050 0020/HD	59819	116 050 0020/HD	59818/2	116 050 0021	59821
116 050 0021S	59821/1	116 050 0023	51870	116 050 0024	51871
116 050 0027	52718	116 050 0028	59813	116 050 0028	59813/1
116 050 0029/HD	59818/1HPS	116 050 0031/HD	51730	116 050 0032	51726
116 050 0033	51727	116 050 0034	51715	116 050 0035	51716
116 050 0042/HD	51876	116 050 0043/HD	52710	116 050 0044/HD	51874
116 050 0048/HD	51872	116 050 0049	52714	116 050 0063/HD	51877
116 050 0064/HD	51875	116 050 0065/HD	51738	116 050 0066/HD	51739
116 050 0067/HD	51737	116 050 0071	52715	116 050 0072	52717
116 050 0073/HD	51873	116 050 0076	51731	116 050 0077	51732
116 050 0100	49854	116 050 0131	49770	116 050 0131	49770/1
116 050 0132	49769/1	116 050 0132	49769	116 050 0133	49775
116 050 0133 HD	49775	116 050 0134	49776	116 050 0154 HD	49705
116 050 0155	49706	116 050 0155	49706/1	116 050 0156	49704/2
116 050 0156	49704	116 050 0156	49704/1	116 050 0232	19690/1
116 050 0235	19686/1	116 050 1911	19858	116 050 3910	49698
116 050 3911	49699	116 050 8200	19694	116 050 8201	19695
116 050 8228/HD	49710OES	116 050 8239/HD	49713OES	116 050 8254	19870
116 050 8292/HD	49791OES	116 050 8293/HD	49792OES	116 050 8297/HD	49680OES
116 050 8298/HD	49681OES	116 050 8299/HD	49708OES	116 050 8300/HD	49709OES
116 0500 102	49855	116 060 0000/HD	59812HPS	116 060 0001	49860

Die aufgeführten Vergleichsnummern dienen nur zur besseren Identifikation.
References are only specified for a better identification.
Les références mentionées ne servent qu' á une meilleure identification.

MEYLE	MAPCO	MEYLE	MAPCO	MEYLE	MAPCO
116 060 0001	49860/1	116 060 0003/HD	49856HPS	116 060 0004	49865
116 060 0004/S	49865/1	116 060 0006	49685OES	116 060 0006	49682
116 060 0007	49683OES	116 060 0007	49683/1OES	116 060 0008	49684/1OES
116 060 0008	49684OES	116 060 0009	19853HPS	116 060 0011	49793
116 060 0012	49794	116 060 0016	52712	116 060 0017	52713
116 060 0020/HD	51825HPS	116 060 0021	51733	116 060 0022	51734
116 060 0023	51829HPS	116 060 0024/HD	51718HPS	116 060 0028	52711
116 060 0102	49851	116 060 7179	19603HPS	116 060 8240	49714
116 060 8241	49729	116 060 8242	49715	116 060 8295	49688
116 060 8296	49689	116 0600 010	49863	116 069 8003	49686
1160307155	19871	151 606 00001	49030HPS	15-16 020 0001	19030
15-16 020 0002	19029	15-16 020 0006	19015	15-16 031 0001	19018
15-16 050 0009	19032	15-16 060 0002	49032HPS	15-16 060 0010/HD	59017
15-16 060 0011/HD	59016	15-16 060 0012/HD	59020	15-16 060 0013/HD	59021
160 100 000	49825	160 100 002	51834	160 100 004	59832
160 106 327	49891	160 106 331	49802	160 200 026	59873
160 200 026	59872	160 206 330	49800	160 206 339	49805
160 206 340	49806	160 300 000	59840	160 300 002	59841
160 300 006	51840	160 300 007	51841	160 306 126	49898
160 306 126	49899	160 306 332	59865	160 306 338	49807
160 310 001	49894	160 350 008	51832	160 350 009	51833
160 350 020	59877	160 350 021	59876	160 391 401	49888
160 391 402	49889	160 391 403	49890	160 396 401	49893
160 406 317	49813	160 406 321	49892	160 500 004	49821
160 500 005	49822	160 500 010	49817	160 500 011	49818
160 500 012	49815	160 500 013	49816	160 500 014	59836
160 500 015	59837	160 500 017	51837	160 500 018	51838
160 500 021	49814/1	160 500 022	49814/2	160 500 029	59881
160 500 030	59882	160 500 031	59885	160 500 032	59884
160 500 034	51835	160 500 037	59879	160 500 038	59880
160 506 068	49896	160 506 069	49897	160 506 336	49819
160 506 337	49820	160 600 002	49895	160 600 005	59857HPS
160 600 005	59857	160 600 022	59859	160 600 023	59860
160 600 024	59861HPS	160 600 024	59861	160 600 224	59845
160 606 318	49826	160 606 319	49827	161 601 00001	19143
161 601 00526	19102	161 601 04261	19123	161 601 04266	19116
161 601 04267	19115	161 601 04281	19128	161 601 04295	19127
161 601 05745	19132	161 602 00003	19131	161 602 00004	19189
161 602 00005	19190	161 602 00008	49144	161 602 04252	19105
161 602 04256	19108	161 602 04287	19133	161 602 04288	19134
161 602 07014	19130	161 602 07015	19130/1	161 602 07026	19139
161 602 07027	19140	161 602 07053	19169	161 602 07053	19180
161 602 07054	19170	161 602 07054	19181	161 602 07060	19142
161 603 00009	19171	161 603 04278	19121	161 603 04280	19198
161 603 07002	19153	161 603 07003	19154	161 603 07009	19107
161 603 07013	19151	161 603 07018	19150	161 603 07022	19166
161 603 07022	49107	161 603 07046	19149	161 603 07056	19156/1
161 603 07058	19161	161 603 07059	19156	161 603 10000	19193
161 603 10002	49103	161 605 00003	19163	161 605 00005	19158

Die aufgeführten Vergleichsnummern dienen nur zur besseren Identifikation.
References are only specified for a better identification.
Les références mentionées ne servent qu' á une meilleure identification.

MEYLE	MAPCO	MEYLE	MAPCO	MEYLE	MAPCO
161 605 00006	19157	161 605 00013	19177	161 605 00014	19178
161 605 07030	19137	161 605 07031	19138	161 605 07034	19148
161 605 07035	19167	161 605 07035	19147	161 606 00001	49121
161 606 00001	49121HPS	161 606 00003	49118HPS	161 606 00003	49118
161 606 07057	19164	16-14 054 0001	33127	16-14 079 9404	33164
16-14 610 0000	33124	16-14 610 0002	33122	16-14 610 0003	33121
16-14 610 0006	33119	16-14 610 0007	33120	16-14 610 0009	33414
16-14 610 0009	33314	16-14 615 0001	49160	16-16 010 0003	49139
16-16 010 0004	49151	16-16 010 0009	49111	16-16 010 4264	19109
16-16 010 4271/HD	19135	16-16 020 0000	49136	16-16 020 0004	49100
16-16 020 0005	49101	16-16 020 0006	49135	16-16 020 0009	49143
16-16 020 0011	49192	16-16 020 0012	49193	16-16 020 4273	19136
16-16 030 0002	19172	16-16 030 0003	19173	16-16 030 0004	19182
16-16 030 0005	19183	16-16 030 0016	19176	16-16 030 0017	19175
16-16 030 4280	19126	16-16 031 0007	49159	16-16 031 0008	49117/1
16-16 031 0011	19195	16-16 031 0015	19174	16-16 050 0007/HD	19197
16-16 050 0008/HD	19196	16-16 050 0015	49190	16-16 050 0016	49191
16-16 050 0017	49141	16-16 050 0018	49142	16-16 050 0019	49131
16-16 050 0020	49132	16-16 050 0021	49133	16-16 050 0022	49152
16-16 050 0023	49134	16-16 050 0024	49153	16-16 060 0004/HD	49124HPS
16-16 060 0006/HD	49146HPS	16-16 060 7057	19164HPS	16160310001	49126
181 601 00001	49649	181 601 03469	49648	214 030 4686	19079
214 077 0000/S	34053	214 610 0000	33017	214 610 0003	33035
214 610 0006	33047	214 610 0007	33046	214 610 0008	33019
216 010 0000	19060	216 010 0002	49021	216 010 0063	19091
216 010 0391	19084	216 010 0392	19085	216 010 3118	19044
216 020 0000	49098	216 020 0002	19053	216 020 0003	19052
216 020 0004	19093	216 020 0005	19092	216 020 0008	49018
216 020 0009	49017	216 020 0015	59012	216 020 0016	59013
216 020 0021	19423	216 020 0061	19090	216 020 0388	19082
216 020 0390	19081	216 020 4080	19047	216 020 4684	19065
216 030 0001	19022	216 030 3100	19068	216 030 3120	19043
216 031 0003	59011	216 031 0005	19493	216 031 0006	49071
216 031 0011	19452	216 031 0013	49093	216 031 0014	19424
216 031 3101	19404	216 050 0001	19066	216 050 0002	19067
216 050 0005	49045	216 050 0006	19009	216 050 0007	19010
216 050 0008	49062	216 050 0010	49044	216 050 0011	49025
216 050 0012	49024	216 050 0017	49042	216 050 0018	49041
216 050 0021	49036	216 050 0022	49037	216 050 0029	19045
216 050 0253	19025	216 050 3118	19057	216 050 4063	19041
216 050 4671	19050	216 050 4672	19051	216 050 7504	19056
216 060 0000	19028HPS	216 060 0001	19026HPS	216 060 0003	33009
216 060 0006/HD	49039HPS	216 060 0007	19099	216 060 0015/HD	59024
26-16 010 0000	51300	28-16 031 0002	51533	28-16 060 0009	59594HPS
28-16 060 0013	51532	28-16 060 0014	59344HPS	28-16 060 0019/HD	51230
28-16 060 0020	59341HPS	29-16 020 0001	59211	29-16 020 0006	51298
29-16 020 0007	51299	29-16 050 0001	49598	29-16 050 0002	49597
29-16 050 0008	51296	29-16 050 0009	51297	29-16 060 0003	49295
29-16 060 0004	49296	29-16 060 0007/HD	51291HPS	29-16 060 0008/HD	51290HPS

Die aufgeführten Vergleichsnummern dienen nur zur besseren Identifikation.
References are only specified for a better identification.
Les références mentionées ne servent qu' á une meilleure identification.

MEYLE	MAPCO	MEYLE	MAPCO	MEYLE	MAPCO
29-16 060 0009/HD	19558HPS	300 311 2001/HD	36689	300 311 2107	36670
300 311 2919/HD	33933/2	300 311 2919/HD	33933	300 335 5101	49787
300 335 5102	49786	300 335 5105	49663HPS	301 601 00003	59318
301 601 00005	59261	301 601 00006	19569	301 601 00006	19568
301 601 00006	19562	301 601 00006	19561	301 601 00006	59565
301 601 00007	59323	301 601 00010	59566	301 601 00013	59563
301 601 00014	59334	301 601 00016	59569	301 601 00017	59260
301 601 00034	19563	301 601 00034	19571	301 602 00000	59560
301 602 00004	59282	301 602 00009	59274	301 602 00115	59561
301 603 00005	59263	301 603 00006	59267	301 603 00011	19567
301 603 00039	59266	301 603 00041	59272	301 603 00041	59268
301 603 00058	49288	301 603 00062	19566	301 603 00071	19564
301 603 00072	19565	301 605 00000	49568	301 605 00016	49569
301 606 00002	19578	301 606 00003	19577	301 606 00005	49270HPS
301 606 00009	19573	301 606 00009	19572	30-16 010 0043	51388
30-16 010 0044	51389	30-16 020 0004	59278	30-16 020 0007	19560
30-16 020 0105	59277	30-16 020 0106	59281	30-16 020 0111	49567
30-16 020 0112	49566	30-16 030 0015	59328	30-16 030 0055	59332
30-16 031 0000	51390	30-16 031 0073	49287	30-16 050 0009	49551
30-16 050 0011	49550	30-16 050 0031	49258/1	30-16 050 0082	59381/1
30-16 050 0087	59380/1	30-16 060 0023	51570	30-16 060 0026/HD	49274HPS
30-16 060 0028	51586	30-16 060 0029/HD	51372	30-16 060 0031	51569
30-16 060 0032/HD	51379HPS	30-16 060 0033	51585HPS	30-16 060 0033/HD	51585
30-16 060 0038	51391	30-16 060 0039	51568	30-16 060 0040	51573
30-16 060 0041	51576	30-16 060 0045/HD	51371	30-16 060 0047/HD	51597HPS
311 602 00004	19505	311 602 00006	19508	311 602 00006	19500
311 602 00011	19509	311 602 00011	19501	311 603 10020	59514
311 603 50002	49203	311 603 50011	49204	311 605 00012	49507
311 605 00015	49215	311 605 00027	49512	311 605 00028	49511
311 605 00029	49503	311 605 00030	49502	311 605 00031	49260
311 605 00036	49514	311 605 00043	49212	311 605 00044	49211
311 606 00007	49201	311 606 00008	49202	311 606 00009	59500
311 606 00010	59501	311 606 00014	49267	311 606 00015	59502
31-14 300 0003	33520	31-14 300 0006	33523	31-14 523 0001	33520
31-16 010 0001	19503	31-16 010 0002	19507	31-16 010 0005	49510
31-16 020 0001	59319	31-16 020 0007	19504	31-16 020 0009	59372
31-16 020 0009	59371	31-16 030 0004	59557	31-16 030 0010	19506
31-16 030 0017	19502	31-16 030 0018	59246	31-16 031 0021	59512
31-16 050 0016	49216	31-16 050 0029	59509	31-16 050 0030	59508
31-16 050 0031	49513	31-16 050 0090	51503	31-16 050 0091	51502
31-16 060 0003	59243	31-16 060 0004	59244	31-16 060 0011/HD	49200HPS
31-16 060 0011/HD	19516	31-16 060 0012	51505	31-16 060 0015	59502HPS
31-16 060 0016	49269HPS	31-16 060 0017	59503HPS	31-16 060 0018	49268HPS
316 010 0002	59602	316 010 0003 HD	19666HPS	316 010 0003/HD	19666/1
316 010 0005	51661	316 010 0006	51662	316 010 0007	51660
316 010 4347	59622	316 020 0000	59691	316 020 0001	59600
316 020 0004	59690	316 020 0007/HD	51667	316 020 0008/HD	51668
316 020 4215	19669	316 020 4216	19668	316 020 4302	19660
316 020 4341	19663	316 020 4344	19664	316 020 4350	49739

Die aufgeführten Vergleichsnummern dienen nur zur besseren Identifikation.
References are only specified for a better identification.
Les références mentionées ne servent qu' á une meilleure identification.

MEYLE	MAPCO	MEYLE	MAPCO	MEYLE	MAPCO
316 020 4351	49740	316 020 4374	19783	316 020 4374	49736
316 020 4375	49735	316 020 4603	49653	316 020 4604	49654
316 030 0000	49746	316 030 0003	59610	316 030 0003	59601
316 030 0004	19784	316 030 0005	19785	316 030 0011	51638
316 030 0012/HD	51655	316 030 0013/HD	51656	316 030 0017/HD	51665
316 030 0018/HD	51666	316 030 4214	19675	316 030 4301	49780
316 030 4304	49781	316 030 4340	49783	316 030 4354	49722
316 030 4355	49721	316 030 4600	19676	316 031 0004	51653
316 031 0005	51654	316 035 0001	59637	316 035 0005/HD	51648
316 035 0006/HD	51649	316 039 3807	49652	316 040 4226	49730
316 040 4228	49731	316 040 4315	49658	316 040 4331	49660
316 040 4349	49741	316 040 4372	59624	316 050 0003/HD	49676/1
316 050 0004/HD	49677/1	316 050 0005	51663	316 050 0006	51664
316 050 0007	59606	316 050 0008	59607	316 050 0009	59608
316 050 0010	59609	316 050 0017	51632	316 050 0018	51633
316 050 0019	51636	316 050 0020	51637	316 050 0021	51635
316 050 0022	51634	316 050 0024	51652	316 050 0025	51650
316 050 0026	51651	316 050 0027/HD	51630	316 050 0028/HD	51631
316 050 2100	59638	316 050 3601/HD	19671HPS	316 050 3602/HD	19670HPS
316 050 3807	49655	316 050 3808	49656	316 050 3901	49723
316 050 3902	49724	316 050 3903 HD	49727	316 050 3904	49728
316 050 3905	59619	316 050 3905	59635	316 050 3906	59620
316 050 3906	59636	316 050 4217	19673	316 050 4218	19674
316 050 4317 HD	49678	316 050 4318 HD	49679	316 050 4332	19698
316 050 4333	19699	316 050 4360	49695	316 050 4361	49694
316 050 4362/HD	49651	316 050 4363/HD	49650	316 050 4366	49734
316 050 4367	49733	316 050 4370	49662	316 050 4371	49661
316 060 0000	59632	316 060 0001/HD	59613HPS	316 060 0002/HD	59628HPS
316 060 0003/HD	59623HPS	316 060 0004/HD	59631HPS	316 060 0005	59603HPS
316 060 0005	59603	316 060 0006	59604HPS	316 060 0006	59604
316 060 0008/HD	59605HPS	316 060 0011/HD	51641HPS	316 060 0012/HD	51646
316 060 0013/HD	51644	316 060 0014/HD	51645	316 060 0016/HD	51657
316 060 0017/HD	51658	316 060 0018/HD	51639HPS	316 060 0018/HD	51639
316 060 0019/HD	51640HPS	316 060 0020/HD	51659	316 060 0022/HD	59614HPS
316 060 4225	49788	316 060 4311	19667HPS	316 060 4322	19678HPS
316 060 4358	49726	316 060 4358	49726HPS	316 060 4359	49725HPS
316 060 4359	49725	316 060 4364/HD	49795HPS	316 060 4365	49796
316 060 4607/HD	19700HPS	316 060 4610	49799	316 322 1101	49657
316 333 2101	51647	321 601 00012	49578	321 601 00021	19553
321 601 00022	19555	321 601 00023	19554	321 602 00003	19545
321 602 00004	59307	321 602 00027	19549	321 602 00028	19548
321 603 00002	19550	321 605 00009	59357	321 605 00010	59356
321 605 00011	49541	321 605 00012	49540	321 605 00023	49242
321 605 00026	59399	321 605 00027	59398	321 605 00038	49244
321 605 00039	49243	321 605 00043	49241	321 606 00002	19544
321 606 00005	59542	321 606 00009	59510	32-16 020 0017	19546
32-16 020 0022	59310	32-16 020 0022	59205	32-16 031 0014	59308
32-16 050 0032	59396	32-16 050 0033	59397	32-16 060 0000	59541HPS
32-16 060 0005	19543HPS	32-16 060 0008	59511HPS	32-16 060 0009	59510HPS

Die aufgeführten Vergleichsnummern dienen nur zur besseren Identifikation.
References are only specified for a better identification.
Les références mentionées ne servent qu' á une meilleure identification.

MEYLE	MAPCO	MEYLE	MAPCO	MEYLE	MAPCO
32-16 060 0010	59540HPS	32-16 060 0011	59547	32-16 060 0012	59546
32-16 060 0019	59538HPS	32-16 060 0020	59537HPS	32-16 060 0021	59545HPS
32-16 060 0025/HD	49250HPS	331 602 00015	49561	331 603 00002	49596
33-16 020 0006	59201	33-16 020 0022	51250	33-16 060 0006/HD	51255
341 601 00001	59297	341 601 00002	49560	341 601 00003	49556
34-14 610 0001	33563	351 601 00001	19587	351 601 00002	19582
351 601 00023	19585	351 603 00021	19588	351 603 00026	59349
351 605 00038	49581	351 605 00039	49580	351 606 00001	59591
351 606 00002	59590	351 606 00004	19593HPS	351 606 00005	49590
35-16 010 0020	51534	35-16 010 0024	49589	35-16 020 0001	19595
35-16 020 0001	49518	35-16 020 0001	19510	35-16 020 0002	19583
35-16 020 0027	19589	35-16 020 0027	59350	35-16 020 0029	51342
35-16 020 0031	51343	35-16 020 0032	51340	35-16 030 0001	19599
35-16 030 0017	49586	35-16 031 0001	51344	35-16 031 0022	19584
35-16 050 0031	49231	35-16 050 0032	49230	35-16 050 0033	49583
35-16 050 0034	49582	35-16 050 0042	49585	35-16 050 0043	49584
35-16 050 0049	51538	35-16 050 0054	59368	35-16 050 0055	59369
35-16 050 0060	51331	35-16 050 0061	51330	35-16 060 0000	49591HPS
35-16 060 0001	19590HPS	35-16 060 0002	19591HPS	35-16 060 0003	19592HPS
35-16 060 0003	59592	35-16 060 0005	49590HPS	35-16 060 0011/HD	59535HPS
35-16 060 0014/HD	59534	35-16 060 0015	59388HPS	35-16 060 0015	59388
35-16 060 0018/HD	51334HPS	35-16 060 0019/HD	51336	35-16 060 0020/HD	51335HPS
35-16 060 0025/HD	51332HPS	360 100 001	59898	360 200 004	49848
360 200 011	49880	360 200 012	49849	360 200 013	49847
360 200 014	49848	360 200 019	49884	360 200 020	49883
360 300 008	49846	360 300 017	49837	360 300 018	49886
360 400 011	49845	360 400 012	49844	360 400 019	49838
360 500 000	59801	360 500 004	59802	360 600 289	59854
361 601 00002	59325	361 601 00008	19536	361 601 00039	19522
361 601 00040	19526	361 602 00053	59257	361 602 00053	19520
361 602 00054	59255	361 602 00070	19525	361 602 00078	19556
361 603 00001	19530	361 603 00010	19521	361 605 00029	49531
361 605 00063	49539	361 605 00064	49538	361 606 00004	49524
36-16 010 0001	19535	36-16 010 0003	59520	36-16 010 0006	19524
36-16 010 0010	59521	36-16 010 0039	59522	36-16 010 0044	51283
36-16 020 0008	19534	36-16 020 0009	19533	36-16 020 0011	59258
36-16 020 0086	59225	36-16 031 0004	59525	36-16 050 0030	49530
36-16 050 0045	49520	36-16 050 0046	49521	36-16 050 0053	49221
36-16 050 0054	49220	36-16 050 0061	49527	36-16 050 0062	49526
36-16 050 0081	51284	36-16 050 0082	51285	36-16 050 0083	49536
36-16 050 0084	49537	36-16 050 0085	59358	36-16 050 0086	59359
36-16 060 0001/HD	19527HPS	36-16 060 0007/S	49525HPS	36-16 060 0011	19529HPS
36-16 060 0014	49228	36-16 060 0018	51526	36-16 060 0022	49226HPS
36-16 060 0026/HD	51525HPS	36-16 060 0027/HD	59250	36-16 060 0028/HD	59251
36-16 060 0029	59226HPS	36-16 060 0034	49222HPS	36-16 060 0037/HD	51282
36-16 060 0038/HD	19538	36-16 060 0039/HD	19539	36-16 060 0040/HD	51281
371 602 00003	49256	37-16 010 0001	19511	37-16 010 0002	49255
37-16 010 0003	19513	37-16 020 0001	19512	37-16 031 0007	59572
37-16 031 0008	51210	37-16 050 0004	51220	37-16 050 0005	51221

Die aufgeführten Vergleichsnummern dienen nur zur besseren Identifikation.
References are only specified for a better identification.
Les références mentionées ne servent qu' á une meilleure identification.

MEYLE	MAPCO	MEYLE	MAPCO	MEYLE	MAPCO
37-16 060 0003/HD	49253	401 601 00002	19427	401 603 04250	19470
401 605 00002	19459	401 605 00002	19437	401 606 00003	19429HPS
40-16 010 0002	19426	40-16 010 0004/HD	19498	40-16 010 3357	19419
40-16 020 5723	19417	40-16 020 5724	19418	40-16 030 6901	19409
40-16 050 0002/HD	19439	40-16 050 0004/HD	19440	40-16 050 0005	19453
421 601 00010	49745	421 602 00003	49743	421 602 00025	49742
44-16 050 0000	59930	44-16 050 0001	59931	45-16 050 0002	51690
45-16 050 0003	51691	514 080 000 2S	19915	514 127 3235	33994
514 308 0001	33552	514 610 0005/HD	33996	514 610 0006/HD	33995
514 915 7725	19913	516 010 0002	49924	516 010 0003	49955
516 010 3284	19907	516 010 5292	19902	516 010 5293	19901
516 010 5554	19912	516 0100001	19909	516 020 0002	19908
516 020 0008	49965	516 020 0009	49966	516 020 0018	49921
516 020 0019	49922	516 020 0020	19547	516 020 0020	19540
516 020 3283	19906	516 020 5548	19911	516 020 5549	19910
516 030 0003	49954	516 030 0004	49923	516 030 0027	49910
516 030 3280	49952	516 030 5511	49928	516 030 5531	49900
516 030 5539	49942	516 030 5540	49943	516 030 5551	49917
516 030 5556	49944	516 031 0002	49964	516 031 0006	49927
516 031 9950	49918	516 035 0000	49956	516 050 0000	49908
516 050 0000	49920	516 050 0000	49545	516 050 0001	49544
516 050 0007	49958	516 050 0008	49959	516 050 0009	49919
516 050 0010	49925	516 050 0011	49926	516 050 0017/HD	49962
516 050 0018/HD	49963	516 050 0024/HD	49961	516 050 0025/HD	49960
516 050 7001	49912	516 050 7002	49913	516 050 7003	49914
516 050 7004	49915	516 0500 009	49907	516 060 0000/HD	19914HPS
516 060 0003	49901HPS	516 060 0004	49902HPS	516 060 0009	49947HPS
516 060 0009	49947	516 060 0012/HD	49916HPS	516 060 0014/HD	49905HPS
516 060 0015/HD	49906HPS	516 060 1432S	49909	516 060 9600	19937HPS
516 060 9600	19937	53-16 060 0004/HD	59679	61 601 05560	19618
614 032 0001	59367	614 032 0002	49604	614 035 0002/HD	33714
614 035 0027	33796	614 035 0032	36764	614 035 0033	33768
614 035 0037	36703	614 540 0002	33756	614 540 0005	33762
614 610 0005	36704	614 610 0006	36705	616 010 0001	49610
616 010 0005/HD	49110	616 010 0006	49092	616 010 5352	19816
616 010 5375	19714	616 010 5382	19802	616 010 5382	19612
616 010 5393	19801	616 010 5559	19617	616 010 5583	19621
616 010 6005	19632	616 020 0001	19800	616 020 5377	19718
616 020 5380	19719	616 020 5554	19613	616 020 5555	19615
616 020 5556	19614	616 020 5557	19616	616 020 5562	19610
616 020 5565	19611	616 020 5570	19631	616 020 5579	19626
616 020 5588	49759	616 020 5589	49758	616 020 5590	49601
616 020 5591	49600	616 020 6002 HD	19638	616 020 6002/HD	19637
616 030 5392	19805	616 030 5402	19803/1	616 030 5406	19804/1
616 030 5563	49750	616 030 5563	49752	616 030 5566	49751
616 030 5566	49753	616 030 5576	49754	616 030 5577	49755
616 030 5580	19627	616 030 5581	19628	616 030 5586	19813
616 030 5587	19812	616 031 0001	19810	616 031 6003	49607
616 050 0001	49623	616 050 0002	49624	616 050 0003	19808

Die aufgeführten Vergleichsnummern dienen nur zur besseren Identifikation.
References are only specified for a better identification.
Les références mentionées ne servent qu' á une meilleure identification.

MEYLE	MAPCO	MEYLE	MAPCO	MEYLE	MAPCO
616 050 0004	19809	616 050 0006	19624	616 050 0007	19634
616 050 0008	19633	616 050 0011	49609	616 050 0012	49608
616 050 0017	19629	616 050 0018	19630	616 050 0068	19620
616 050 0069	19619	616 050 0210	19622	616 050 0211	19623
616 050 6006	19636	616 050 6007	19635	616 060 0003/HD	19639
616 060 0004/HD	49749HPS	616 060 0009	19811HPS	616 060 0010	59849
616 060 0012/HD	59026HPS	616 060 0013	51302	616 060 0014	51303
616 060 1001S	33726	616 060 1002S	33727	616 060 5409	19602HPS
616 060 5574	19607	616 060 5574/S	19607/8HPS	616 060 5575/HD	19606HPS
616 060 5582	19600HPS	714 006 0001	33676	714 069 0001	33634
714 100 0001/HD	33614	714 101 0001	33636	714 102 0001	33617
714 102 0001	33616/7	714 103 0001/HD	33615	714 110 0001	33670
714 161 0002	33609	714 165 0001	33627	714 502 0001	33611
714 610 0001	33672	714 614 0001	33645	714 615 0002	33644
714 615 0003	33671	714 619 0002	33677	714 651 0003	33675
714 679 0002	33616	714 710 0000	33628	714 710 0001	33678
714 725 0001/HD	29795	714 737 0001	33642	716 020 4105	19753
716 010 0001	19754	716 010 0004	19749	716 010 0005	19751
716 010 0006	19763	716 010 0007	19765	716 010 0012	59643
716 010 3135	19721	716 010 3372	19725	716 010 4115	19759
716 020 0004	59669	716 020 0005	19580	716 020 0006	19646
716 020 0006	19645	716 020 0007	19648	716 020 0008	19649
716 020 0010	49640	716 020 0011	49641	716 020 0014	59672
716 020 0015	59640	716 020 0016	59670	716 020 0019	59676
716 020 0331	19727	716 020 0874	59658	716 020 3368	19735
716 020 3369	19736	716 020 3379	19745	716 020 3387	19748
716 020 4098	49645	716 020 4098	49646	716 020 4100	49882
716 020 4100	19742	716 020 4101	19741	716 020 4101	49881
716 020 4106	19752	716 020 4107	19750	716 020 4112	19758
716 020 4113	19757	716 020 4147	19640	716 020 4148	19641
716 030 0001	19740	716 030 0001	49644	716 030 0007	19724
716 030 0026	49737	716 030 3365	19655	716 030 4120	19723
716 030 4121	19654	716 030 4145	19647	716 030 4145	49642
716 030 4153	19644	716 031 0000	59641	716 031 0000	59642
716 031 0003	19722	716 031 0004	49643	716 031 0005	19650
716 031 0006	19762	716 035 0000	51607	716 035 0001	19658
716 035 0002	51615	716 035 0003	51614	716 035 0004	51613
716 035 0005	59668	716 050 0003/HD	19702/1	716 050 0004/HD	19701/1
716 050 0005/HD	19702	716 050 0006/HD	19701	716 050 0007	19652
716 050 0008	19651	716 050 0009	19769	716 050 0010	19768
716 050 0013	59644	716 050 0014	59645	716 050 0021	59662
716 050 0022	59661	716 050 0027	59651	716 050 0028	59650
716 050 0029	59675	716 050 0030	59674	716 050 0033	51622
716 050 0034	51623	716 050 0035	51603	716 050 0036	51602
716 050 0039/S	53612/1	716 050 0040	59647	716 050 3301/HD	19761
716 050 3302/HD	19760	716 050 3370	19737/1	716 050 3375	19746/1
716 050 3380	19743/1	716 050 3381	19744/1	716 050 4131/HD	19755/1
716 050 4132/HD	19756/1	716 050 4134	19656	716 050 4136	19755/3
716 050 4137/HD	19755/2	716 050 4139	19756/3	716 050 4141	19643

Die aufgeführten Vergleichsnummern dienen nur zur besseren Identifikation.
References are only specified for a better identification.
Les références mentionées ne servent qu' á une meilleure identification.

MEYLE	MAPCO	MEYLE	MAPCO	MEYLE	MAPCO
716 050 4142	19642	716 050 4150	19657	716 050 4150	19643/1
716 050 4159	19642/1	716 0503 371	19738/1	716 060 0000	33632/1
716 060 0000	33632	716 060 0001	19601	716 060 0002	19609HPS
716 060 0003	19781	716 060 0004	19605HPS	716 060 0005	19780
716 060 0006	59667	716 060 0007	19773HPS	716 060 0007/HD	19777
716 060 0008	19775	716 060 0008/HD	19775HPS	716 060 0009	33633
716 060 0009	33633/1	716 060 0012	19659HPS	716 060 0013	19776HPS
716 060 0014/HD	59664HPS	716 060 0015	51610	716 060 0017/HD	19774HPS
716 060 0022/HD	51621	716 060 0023/HD	51601	716 060 0090	19604HPS
716 060 0090/HD	19608HPS	816 010 0556	19983	816 010 4903	19980
816 020 4902	19982	816 020 4904	19981	816 031 0002	49606
816 050 9003	49983	816 050 9004	49984	816 050 9005	19984
816 050 9006	19985	816 060 0001	49980		

MOOG	MAPCO	MOOG	MAPCO	MOOG	MAPCO
AL-AX-1223	19018	AL-AX-1681	19016	AL-BJ-1633	49050
AL-BJ-7521	19008	AL-DS-7511	19013	AL-DS-7512	19014
AL-ES-0050	19029	AL-ES-0051	19030	AL-ES-5418	59015
AL-LS-0043	49046	AL-LS-0052	49030HPS	AL-LS-0263	49047
AL-LS-0266	49048	AL-LS-3296	49033	AL-LS-3297	49034
AL-LS-5093	59017	AL-LS-5094	59016	AL-LS-5095	59020
AL-LS-5096	59021	AL-LS-7542	49031	AL-SB-0499	33008
AL-SB-0500	33010	AL-SB-0501	33013	AL-SB-0502	33014
AL-SB-1720	33007	AL-TC-0053	49027	AL-TC-0055	49026
AL-TC-0056	49028	AL-TC-0057	49029	AL-TC-3623	49068
AL-TC-3624	49067	AL-TC-5097	59018	AL-TC-5098	59019
AL-WP-1436	19032	AL-WP-1437	19031	AL-WP-1612	19020
AL-WP-1621	19021	AL-WP-1708	49080	AL-WP-1987	49081
AL-WP-7526	19010	AL-WP-7527	19009	AMGES3306	59276
AMGK7306	59932	AMGK80230	51597	AMGK90417	33521
AMGK90659	49224HPS	AU-BJ-7168	19898	AU-BJ-7169	19680
AU-BJ-7172	19897	AU-BJ-7174	19681	AU-BJ-7175	19684
AU-BJ-7177	19685	AU-DS-0717	51714	AU-DS-0718	51713
AU-DS-7197	49763	AU-DS-8231	49789	AU-DS-8232	49790
AU-DS-8294	59893	AU-ES-3721	59806	AU-ES-3723	59807
AU-ES-3890	59820	AU-ES-3916	19890	AU-ES-7149	49717
AU-ES-7150	49718	AU-ES-8206	19692	AU-ES-8207	19693
AU-LS-3717	52712	AU-LS-3718	52713	AU-LS-4934	52711
AU-LS-7179	19603HPS	AU-LS-8241	49729	AU-LS-8242	49715
AU-LS-8295	49688	AU-LS-8296	49689	AU-SB-1037	33892
AU-SB-1097	33878	AU-SB-1120	33891	AU-SB-1126	33901
AU-SB-1136	33829	AU-SB-1149	33808	AU-SB-1602	33843
AU-SB-1602	33906	AU-SB-1671	33846	AU-SB-3200	33938
AU-SB-4448	33894	AU-SB-4455	33902	AU-SB-4458	33830
AU-SB-4461	33827	AU-SB-4470	33844	AU-SB-4479	33941
AU-SB-4484	33899	AU-SB-4508	36941	AU-SB-4843	36777
AU-SB-4844	36774	AU-SB-4845	36771	AU-TC-0674P	49791OES
AU-TC-0678P	49792OES	AU-TC-3035P	19854	AU-TC-3908	49698
AU-TC-3909	49699	AU-TC-4696	51872	AU-TC-4697	51873
AU-TC-4937	52710	AU-TC-4945	51874	AU-TC-4946	51875

Die aufgeführten Vergleichsnummern dienen nur zur besseren Identifikation.
References are only specified for a better identification.
Les références mentionées ne servent qu' á une meilleure identification.

MOOG	MAPCO	MOOG	MAPCO	MOOG	MAPCO
AU-TC-5062	51737	AU-TC-8200	19694	AU-TC-8201	19695
AU-TC-8239	49713OES	AU-WP-0154	49705/1	AU-WP-0155	49706/1
AU-WP-3141	49775	AU-WP-3142	49776	BM-AX-3683	51638
BM-AX-3731	51654	BM-AX-4342	19676	BM-BJ-0899	59602
BM-BJ-1880	51662	BM-BJ-1881	51661	BM-BJ-1882	51660
BM-BJ-4306	19662	BM-BJ-4307	19661	BM-BJ-4345	19665
BM-BJ-4346	19666/1	BM-BJ-4346	19666HPS	BM-DS-1788	19785
BM-DS-2114	59601	BM-DS-4214	19675	BM-DS-4225	49788
BM-DS-4226	49730	BM-DS-4228	49731	BM-DS-4301	49780
BM-DS-4304	49781	BM-DS-4315	49658	BM-DS-4331	49660
BM-DS-4332	19698	BM-DS-4333	19699	BM-DS-4334	19786
BM-DS-4339	49782	BM-DS-4340	49783	BM-DS-4343	49785
BM-DS-4349	49741	BM-DS-4354	49722	BM-DS-4355	49721
BM-DS-4358	49726HPS	BM-DS-4358	49726	BM-DS-4359	49725HPS
BM-DS-4359	49725	BM-DS-4364	49795HPS	BM-DS-4365	49796
BM-ES-0490	49653	BM-ES-0491	49654	BM-ES-1871	59691
BM-ES-1874	59690	BM-ES-2113	59600	BM-ES-2439	59626
BM-ES-3728	51667	BM-ES-3729	51668	BM-ES-4215	19669
BM-ES-4216	19668	BM-ES-4270	19782	BM-ES-4279	19783
BM-ES-4302	19660	BM-ES-4341	19663	BM-ES-4344	19664
BM-ES-4350	49739	BM-ES-4351	49740	BM-ES-4374	49736
BM-ES-4375	49735	BM-LS-0420	59628HPS	BM-LS-0433	49799
BM-LS-1151	49786	BM-LS-1787	49787	BM-LS-1886	59695
BM-LS-1887	59614HPS	BM-LS-1890	59694	BM-LS-2115	59603
BM-LS-2116	59604HPS	BM-LS-2434	59631HPS	BM-LS-2435	59623HPS
BM-LS-3675	51644	BM-LS-3676	51645	BM-LS-3690	51646
BM-LS-3725	51657	BM-LS-3727	51658	BM-LS-3743	51659
BM-LS-3858	51641HPS	BM-LS-3859	51639HPS	BM-LS-3859	51639
BM-LS-3860	51640HPS	BM-LS-3967	59639	BM-LS-4195	51642HPS
BM-LS-4196	51643HPS	BM-LS-4311	19667HPS	BM-LS-4322	19678HPS
BM-LS-5198	59613HPS	BM-SB-0054	33934	BM-SB-1122	33639
BM-SB-1124	33638	BM-SB-1128	33847	BM-SB-1133	33666
BM-SB-1135	33875/1	BM-SB-1750	33694	BM-SB-1775	33641/2
BM-SB-2200	36688	BM-SB-2202	36660	BM-SB-2213	36669
BM-SB-2433	36668	BM-SB-3688	33691	BM-SB-3694	59622
BM-SB-3966	33692	BM-SB-4194	33690	BM-SB-4447	33689
BM-SB-4480	33695	BM-SB-4483	36662	BM-SB-4495	36661
BM-SB-4842	59621	BM-TC-0448	59620	BM-TC-0449	59619
BM-TC-0476	49728	BM-TC-0477	49727	BM-TC-0486	49652
BM-TC-0897	59609	BM-TC-0898	59608	BM-TC-0918	59607
BM-TC-0920	59606	BM-TC-0923	59618	BM-TC-0924	59617
BM-TC-1752	49655	BM-TC-2122	59611	BM-TC-2125	59612
BM-TC-3152	49656	BM-TC-3684	51632	BM-TC-3685	51633
BM-TC-3686	51636	BM-TC-3687	51637	BM-TC-3691	59637
BM-TC-3733	51649	BM-TC-3738	51634	BM-TC-3739	51635
BM-TC-3740	51652	BM-TC-3742	51651	BM-TC-3862	51630
BM-TC-3863	51631	BM-TC-3864	59635	BM-TC-3865	59636
BM-TC-3936	59638	BM-TC-4217	19673	BM-TC-4218	19674
BM-TC-4317	49678	BM-TC-4318	49679	BM-TC-4356	49724

Die aufgeführten Vergleichsnummern dienen nur zur besseren Identifikation.
References are only specified for a better identification.
Les références mentionées ne servent qu' á une meilleure identification.

MOOG	MAPCO	MOOG	MAPCO	MOOG	MAPCO
BM-TC-4357	49723	BM-TC-4360	49695	BM-TC-4361	49694
BM-TC-4362	49651	BM-TC-4363	49650	BM-TC-4366	49734
BM-TC-4367	49733	BM-TC-4368P	19671HPS	BM-TC-4369	19670HPS
BM-TC-4370	49662	BM-TC-4371	49661	BM-WP-1883	51664
BM-WP-1885	51663	BM-WP-2430	59615	BM-WP-2431	59616
BM-WP-2437	59629	BM-WP-2438	59630	BM-WP-2443	59633
BM-WP-2444	59634	BM-WP-4738	49676/1	BM-WP-4739	49677/1
CH-WP-2458	59930	CH-WP-2459	59931	CH-WP-3298	49936
CH-WP-3299	49937	CI-AX-0537	19483	CI-AX-0863	49400
CI-AX-1707	19484	CI-AX-2467	19493	CI-AX-3350	19409
CI-AX-3361	19411	CI-AX-4246	19412	CI-BJ-0523	19389
CI-BJ-0523	19473	CI-BJ-0868	19491	CI-BJ-3354	19426
CI-BJ-3355	19427	CI-DS-3348	19451HPS	CI-DS-3366	19443
CI-DS-4244	19413	CI-DS-4247	19414	CI-DS-4250	19470
CI-ES-0011	19482	CI-ES-0864	19490	CI-ES-0865	19489
CI-ES-0930	19478	CI-ES-0931	19477	CI-ES-2460	19099
CI-ES-2466	19492	CI-ES-3964	49307	CI-ES-3965	49306
CI-ES-5119	19496	CI-ES-5120	19497	CI-LS-1727	19480
CI-LS-1728	19435HPS	CI-LS-3267	19366	CI-SB-0224	33431
CI-SB-0934	33335	CI-SB-0935	33334	CI-SB-1262	33306
CI-SB-1302	33414	CI-SB-1308	33437	CI-SB-1309	33426
CI-SB-2209	33427	CI-SB-2210	33428	CI-SB-4058	33329
CI-SB-4059	33330	CI-SB-4459	33321	CI-SB-4737	33424
CI-TC-0160	19453	CI-TC-0161	19454	CI-TC-2055	19391
CI-TC-2056	19390	CI-TC-5121	19494	CI-TC-5124	19495
CI-WP-0158	19439	CI-WP-0158	19459	CI-WP-0159	19460
CI-WP-0159	19440	CI-WP-0381	19437	CI-WP-0382	19438
CI-WP-0590	19475	CI-WP-0591	19474	CI-WP-0600	19332
CI-WP-0601	19331	CI-WP-0713	19485	CI-WP-0714	19486
CI-WP-2464	49082	CI-WP-2465	49083	CI-WP-3876	49086
CI-WP-3877	49087	CI-WP-5027	19471	CI-WP-5028	19472
DE-AX-0207	59296	DE-AX-1773	59717	DE-AX-1821	59217
DE-AX-1822	51292	DE-BJ-0633	19519	DE-ES-0126	19517
DE-ES-0126	19557	DE-ES-0634	59211	DE-ES-0639	49611
DE-ES-3893	51298	DE-ES-3894	51299	DE-LS-3271	49298HPS
DE-LS-3896	51291HPS	DE-LS-3897	51290HPS	DE-LS-3971	51293HPS
DE-WP-0630	49598	DE-WP-0631	49597	DE-WP-2478	51297
DE-WP-4419	51294	DE-WP-4420	51295	DI-AX-2295	59214
DI-ES-0637	59208	DI-ES-0638	59207	DI-ES-1450	19532
DI-ES-1451	19531	DI-ES-1606	19597	DI-ES-2559	59215
DI-ES-2620	59216	DI-TC-10462	59212	DI-TC-1290	59213
DI-TC-1642	59218	FD-AX-0007	19724	FD-AX-0026	49737
FD-AX-0270	19722	FD-AX-0470	59666	FD-AX-1537	19650
FD-AX-2197	49643	FD-AX-2258	59663	FD-AX-2382	19762
FD-AX-2526	59642	FD-AX-2527	59641	FD-AX-3140	19654
FD-AX-3388	49644	FD-AX-3388	19740	FD-AX-4138	19723
FD-AX-4145	19647	FD-AX-4146	49642	FD-AX-4153	19644
FD-AX-4154	19655	FD-BJ-0425	19653	FD-BJ-0814	59643
FD-BJ-10065	51540	FD-BJ-10066	51537	FD-BJ-3135	19721

Die aufgeführten Vergleichsnummern dienen nur zur besseren Identifikation.
References are only specified for a better identification.
Les références mentionées ne servent qu' á une meilleure identification.

MOOG	MAPCO	MOOG	MAPCO	MOOG	MAPCO
FD-BJ-3372	19725	FD-BJ-3389	19749	FD-BJ-4115	19759
FD-BJ-4122	19754	FD-BJ-4130	19751	FD-BJ-4133	19756/1
FD-BJ-4133	19765	FD-BJ-4134	19763	FD-DS-0842	59667
FD-DS-4151	19644/1	FD-DS-4152	19644/2	FD-ES-0269	19645
FD-ES-0331	19727	FD-ES-0334	19732	FD-ES-0604	59665
FD-ES-0605	59657	FD-ES-0841	59672	FD-ES-0874	59658
FD-ES-0957	59640	FD-ES-1535	19649	FD-ES-1536	19648
FD-ES-2050	59676	FD-ES-2261	59669	FD-ES-2262	59670
FD-ES-2481	51581	FD-ES-3368	19735	FD-ES-3369	19736
FD-ES-3379	19745	FD-ES-3387	19748	FD-ES-4098	49646
FD-ES-4099	49645	FD-ES-4100	19742	FD-ES-4101	19741
FD-ES-4105	19753	FD-ES-4106	19752	FD-ES-4107	19750
FD-ES-4112	19758	FD-ES-4113	19757	FD-ES-4125	19646
FD-ES-4147	19640	FD-ES-4148	19641	FD-ES-4155	49640
FD-ES-4156	49641	FD-ES-5108	51619	FD-ES-5109	51620
FD-LS-0090	19608HPS	FD-LS-0090	19604HPS	FD-LS-0122	59648
FD-LS-0469	19775HPS	FD-LS-0808	19773HPS	FD-LS-0950	19601
FD-LS-0962	19780	FD-LS-0963	19781	FD-LS-2016	33633
FD-LS-2016	33632/1	FD-LS-2016	33632	FD-LS-2049	51600HPS
FD-LS-2259	19774HPS	FD-LS-2269	33633/1	FD-LS-3274	19776HPS
FD-LS-3286	19777	FD-LS-3662	51610	FD-LS-3667	59664HPS
FD-LS-4064	49227HPS	FD-LS-4114	19605HPS	FD-LS-5111	51621
FD-LS-5444	51615	FD-LS-5445	51613	FD-LS-5446	51614
FD-LS-5699	51625	FD-SB-0190	33644	FD-SB-0191	33678
FD-SB-0492	33647	FD-SB-0497	33646	FD-SB-1113	33627
FD-SB-1134	33609	FD-SB-1344	33615	FD-SB-1345	33614
FD-SB-1346	33617	FD-SB-1347	33618	FD-SB-1348	33616
FD-SB-1349	33635	FD-SB-1350	33636	FD-SB-1353	33676
FD-SB-2247	33864	FD-SB-2378	33677	FD-SB-3161	33628
FD-SB-3659	33671	FD-SB-4464	33645	FD-SB-4467	33643
FD-SB-4467	33642	FD-SB-4509	33675	FD-TC-0951	59646
FD-TC-0952	59668	FD-TC-0954	19658	FD-TC-3370	19737/1
FD-TC-3371	19738/1	FD-TC-3375	19746/1	FD-TC-3376	19747/1
FD-TC-3380	19743/1	FD-TC-3381	19744/1	FD-WP-0162P	19701
FD-WP-0163P	19702	FD-WP-0403P	19652	FD-WP-0404P	19651
FD-WP-0496	19656	FD-WP-0557	49582	FD-WP-0558	49583
FD-WP-0564	19756/4	FD-WP-0565	19755/4	FD-WP-0587	19756/5
FD-WP-0588	19755/5	FD-WP-0715P	59644	FD-WP-0716P	59645
FD-WP-0721	19702/1	FD-WP-0722	19701/1	FD-WP-0738	59651
FD-WP-0739	59650	FD-WP-0843	19657	FD-WP-2047	59675
FD-WP-2048	59674	FD-WP-2524	59661	FD-WP-2525	59662
FD-WP-3313	59655	FD-WP-3314	59654	FD-WP-4126P	19761
FD-WP-4127P	19760	FD-WP-4131P	19755/1	FD-WP-4135P	19756/2
FD-WP-4136P	19755/2	FD-WP-4139P	19756/3	FD-WP-4140P	19755/3
FD-WP-4141P	19643	FD-WP-4142P	19642	FD-WP-4143P	19768
FD-WP-4144P	19769	FD-WP-4149P	19642/1	FD-WP-4150P	19643/1
FI-AX-0086	19079	FI-AX-0087	19068	FI-AX-1232	19022
FI-AX-1461	19023	FI-AX-1558	19404	FI-AX-1751	49020
FI-AX-1839	19024	FI-AX-2503	49043	FI-AX-2518	49019

Die aufgeführten Vergleichsnummern dienen nur zur besseren Identifikation.
References are only specified for a better identification.
Les références mentionées ne servent qu' á une meilleure identification.

MOOG	MAPCO	MOOG	MAPCO	MOOG	MAPCO
FI-AX-3120	19043	FI-AX-3826	49072	FI-AX-4080	19452
FI-AX-4197	49091	FI-AX-4198	49070	FI-AX-4971	19424
FI-AX-7508	19069	FI-AX-7528	19448	FI-BJ-0049	49021
FI-BJ-0512	19498	FI-BJ-0513	19499	FI-BJ-0936	49038
FI-BJ-3118	19044	FI-BJ-3157	19060	FI-BJ-4072	19408
FI-BJ-4077	19421	FI-BJ-4174	49069	FI-BJ-4958	49099
FI-BJ-7530	19449	FI-BJ-7531	19450	FI-ES-0241	49017
FI-ES-0242	49018	FI-ES-0261	19080	FI-ES-0444	19070
FI-ES-0446	49010	FI-ES-0937	49040	FI-ES-1460	19015
FI-ES-2516	49057	FI-ES-2517	49058	FI-ES-3155	19058
FI-ES-3156	19007	FI-ES-3156	19059	FI-ES-3525	49098
FI-ES-4061	19040	FI-ES-4070	19406	FI-ES-4071	19407
FI-ES-4078	19420	FI-ES-4079	19047	FI-ES-4082	19042
FI-ES-4085	19046	FI-ES-4675	19052	FI-ES-4676	19053
FI-ES-4684	19065	FI-ES-4970	19423	FI-ES-7529	19447
FI-LS-0048	19026HPS	FI-LS-0441	33009	FI-LS-2111	49039HPS
FI-LS-2371	19028HPS	FI-LS-3830	49066HPS	FI-LS-4548	59026HPS
FI-LS-5159	59024	FI-SB-1323	33003	FI-SB-1324	33002
FI-SB-1396	33035	FI-SB-1587	33019	FI-SB-2207	49044
FI-SB-2208	49045	FI-SB-2513	33018	FI-TC-0249	49012
FI-TC-0253	19025	FI-TC-1963	49055	FI-TC-1964	49054
FI-TC-2042	49060	FI-TC-2045	49061	FI-TC-2052	49062
FI-TC-2053	49063	FI-TC-4063	19041	FI-TC-4666	19071
FI-TC-4673	19048	FI-TC-4674	19045	FI-TC-7412	49096
FI-TC-7413	49097	FI-TC-7522	19073	FI-TC-7523	19072
FI-WP-0108	19077	FI-WP-0108	19462	FI-WP-0109	19076
FI-WP-0109	19461	FI-WP-0110	19464	FI-WP-0111	19463
FI-WP-0118	49085	FI-WP-0239	49024	FI-WP-0240	49025
FI-WP-0354P	19431	FI-WP-0355P	19432	FI-WP-0939	49041
FI-WP-1462	49065	FI-WP-1463	49064	FI-WP-2109	49036
FI-WP-2110	49037	FI-WP-2509	49023	FI-WP-2519	49022
FI-WP-3840	49084	FI-WP-3958	19098	FI-WP-3959	19097
FI-WP-4671	19050	FI-WP-4672	19051	FI-WP-5693	49042
FI-WP-7501	19055	FI-WP-7502	19054	FI-WP-7503P	19057
FI-WP-7504P	19056	FI-WP-7524	19067	FI-WP-7525	19066
HO-AX-1625	59557	HO-AX-1781	19506	HO-AX-2538	59246
HO-AX-2569	59513	HO-AX-2589	59558	HO-AX-2938	19502
HO-BJ-0167	49510	HO-BJ-10427	19503	HO-BJ-1649	59333
HO-ES-0170	19500	HO-ES-0171	19509	HO-ES-0964	59314
HO-ES-2554	49264	HO-ES-2555	49265	HO-ES-2575	59515
HO-ES-2585	59315	HO-ES-2586	59311	HO-ES-2944	19501
HO-ES-2947	19508	HO-ES-3664	59249	HO-LS-1605	49517
HO-LS-1710	49200HPS	HO-LS-1742	49201	HO-LS-1840	59502
HO-LS-1840	59502HPS	HO-LS-1842	59503HPS	HO-LS-2568	49269HPS
HO-LS-2587	59244	HO-LS-2588	59243	HO-LS-2603	59245
HO-LS-3824	59501	HO-LS-3825	59500	HO-LS-4192	49268HPS
HO-LS-4549	51541HPS	HO-LS-4550	51542HPS	HO-SB-1858	33520
HO-SB-2553	33226	HO-TC-10867	59331	HO-TC-10870	59330
HO-TC-1225	59506	HO-TC-1801	49508	HO-TC-1803	49509

Die aufgeführten Vergleichsnummern dienen nur zur besseren Identifikation.
References are only specified for a better identification.
Les références mentionées ne servent qu' á une meilleure identification.

MOOG	MAPCO	MOOG	MAPCO	MOOG	MAPCO
HO-TC-3334	49204	HO-WP-0165	49502	HO-WP-0166	59508
HO-WP-0166	49503	HO-WP-0322	49507	HO-WP-0323	49506
HO-WP-0439	49205	HO-WP-0440	49206	HO-WP-0596	49512
HO-WP-0597	49511	HO-WP-0823	49211	HO-WP-0824	49212
HO-WP-0965	49501	HO-WP-0966	49500	HO-WP-1804	49513
HO-WP-1805	49514	HO-WP-2536	49262	HO-WP-2536	49504
HO-WP-2537	49263	HO-WP-2564	49209	HO-WP-2565	49210
HO-WP-2566	49260	HO-WP-2567	49261	HO-WP-2570	49217
HO-WP-2571	49218	HO-WP-2577	51503	HY-AX-0009	59553
HY-AX-0969	59572	HY-AX-0971	59719	HY-AX-1653	59336
HY-AX-1669	59339	HY-AX-1718	59573	HY-AX-1733	59575
HY-AX-1818	59555	HY-AX-1819	59556	HY-AX-1820	59570
HY-AX-2615	59571	HY-AX-2620	59554	HY-BJ-0344	19513
HY-BJ-0393	19511	HY-BJ-1214	59327	HY-BJ-1607	59329
HY-BJ-1614	59580	HY-ES-0172	19512	HY-ES-0172	59586
HY-ES-1163	59205	HY-ES-1637	59203	HY-ES-7092	51236
HY-ES-7093	51237	HY-LS-0971	51209	HY-LS-1833	49250HPS
HY-LS-1845	49253	HY-LS-1910	59355HPS	HY-LS-1910	59355
HY-LS-1911	59351	HY-LS-1911	59351HPS	HY-LS-2233	49251HPS
HY-LS-2380	49254HPS	HY-LS-2610	59551	HY-LS-2616	59581
HY-LS-2625	51205HPS	HY-LS-2626	51206HPS	HY-LS-2638	51203
HY-LS-2639	51204	HY-LS-2652	59583	HY-LS-2667	59582HPS
HY-LS-3999	59579HPS	HY-LS-4688	51208	HY-LS-4689	51207
HY-LS-4690	59365	HY-LS-4691	59366	HY-LS-4942	51226
HY-LS-4943	51227	HY-WP-2622	51235	HY-WP-2623	51211
HY-WP-2624	51212	HY-WP-2630	59376	HY-WP-2631	59377
HY-WP-2647	59378	HY-WP-2648	59379	HY-WP-2650	51220
HY-WP-2651	51221	HY-WP-2658	59382	HY-WP-2659	59383
HY-WP-2663	59384	HY-WP-2664	59385	HY-WP-3148	59292
HY-WP-3149	59291	JA-BJ-0561	49649	KI-AX-7089	51238
KI-BJ-7094	51239	KI-LS-2384	59589	KI-LS-2673	59592
KI-LS-2674	59590	KI-LS-2676	59591	KI-LS-7099	51242
KI-WP-7095	51232	KI-WP-7096	51233	LA-BJ-0063	19091
LA-BJ-0391	19084	LA-BJ-0392	19085	LA-ES-0060	19089
LA-ES-0061	19090	LA-ES-0388	19082	LA-ES-0390	19081
LA-ES-0649	19093	LA-ES-0650	19092	LN-AX-2677	59011
LN-BJ-0220	49014	LN-ES-4771	59010	LN-LS-2678	49088
LR-AX-3661	51692	LR-BJ-1928	59686	LR-BJ-4057	51688
LR-ES-1921	59684	LR-ES-1923	59685	LR-ES-3528	51683
LR-ES-7043	51689	LR-LS-1866	59687	LR-LS-2681	59678
LR-LS-2682	59697	LR-LS-2683	59698	LR-LS-3310	59679
LR-LS-4045	51682	LR-LS-4189	51681	LR-SB-5059	36690
LR-TC-1924	59688	LR-TC-1927	59689	LR-TC-5055	51687
MD-AX-1298	19599	MD-AX-1716	51533	MD-AX-1808	19581
MD-AX-2216	59715	MD-AX-2218	59714	MD-AX-2348	59712
MD-AX-2702	59713	MD-AX-2962	19588	MD-AX-3071	19594
MD-AX-3072	19584	MD-AX-3888	51344	MD-AX-3973	59349
MD-BJ-0747	59346	MD-BJ-10002	19582	MD-BJ-104144	19587
MD-BJ-104147	19585	MD-BJ-104185	49589	MD-BJ-1171	59326

Die aufgeführten Vergleichsnummern dienen nur zur besseren Identifikation.
References are only specified for a better identification.
Les références mentionées ne servent qu' á une meilleure identification.

MOOG	MAPCO	MOOG	MAPCO	MOOG	MAPCO
MD-BJ-1618	59337	MD-DS-1772	59342	MD-DS-1816	59230
MD-ES-0621	19589	MD-ES-0621	59350	MD-ES-1665	59338
MD-ES-2281	19595	MD-ES-2362	51341	MD-ES-2827	19580
MD-ES-3251	19583	MD-ES-4717	51342	MD-ES-4718	51343
MD-LS-0972	19593HPS	MD-LS-1127	19591HPS	MD-LS-1181	59388
MD-LS-2017	19592HPS	MD-LS-2636	49591HPS	MD-LS-2689	19516
MD-LS-3627	51332HPS	MD-LS-3881	59388HPS	MD-LS-3895	59345
MD-LS-3942	51532	MD-LS-3946	49232	MD-LS-4026	51334HPS
MD-LS-4395	51336	MD-LS-4396	51335HPS	MD-LS-4434	51339HPS
MD-LS-4435	51337	MD-LS-4436	51338	MD-SB-0582	33533
MD-SB-4846	33534	MD-SB-4859	33539	MD-TC-0813	51531
MD-TC-4866	49236	MD-WP-0454	49230	MD-WP-0745	51583
MD-WP-0746	51582	MD-WP-0974	49580	MD-WP-1666	51538
MD-WP-1667	51539	MD-WP-2324	49584	MD-WP-2325	49585
MD-WP-2356	59368	MD-WP-2357	59369	MD-WP-2358	49235
MD-WP-2359	49234	MD-WP-2708	59394	MD-WP-2709	59395
MD-WP-4426	51330	MD-WP-4427	51331	ME-AX-0979	59899
ME-AX-1530	49894	ME-AX-2266	59844	ME-AX-2735	49886
ME-AX-6338	49807	ME-AX-6341	49837	ME-AX-6343	49833
ME-BJ-0234	19844	ME-BJ-0366	49839	ME-BJ-0980	59832
ME-BJ-0981	59838	ME-BJ-1531	49825	ME-BJ-2075	51848
ME-BJ-2099	59902	ME-BJ-2725	51847	ME-BJ-3697	51834
ME-BJ-6287	59898	ME-BJ-6301	19828	ME-BJ-6313	59864
ME-BJ-6313	33870	ME-BJ-6327	49891	ME-BJ-6331	49802
ME-BJ-6345	49831	ME-DL-6061	19838	ME-DS-0803	19839
ME-DS-3094	19822	ME-DS-3097	19825	ME-DS-3100	19821
ME-DS-4178	59862	ME-DS-6126	49898	ME-DS-6128	19829
ME-DS-6231	49845	ME-DS-6300	19832	ME-DS-6306	19845
ME-DS-6308	19830/1	ME-DS-6308	19831/1	ME-DS-6317	49813
ME-DS-6318	49826	ME-DS-6319	49827	ME-DS-6320	19837
ME-DS-6321	49892	ME-DS-6328	59800	ME-DS-6329	49801
ME-ES-0212	51850	ME-ES-0213	19836	ME-ES-0643	49847
ME-ES-0977	59873	ME-ES-0978	59872	ME-ES-1528	49824
ME-ES-1529	49823	ME-ES-1760	49884	ME-ES-1807	49846
ME-ES-2041	49848	ME-ES-2284	59840	ME-ES-2285	59841
ME-ES-2728	51840	ME-ES-2729	51841	ME-ES-2744	19833
ME-ES-2745	19834	ME-ES-2853	59903	ME-ES-3082	19840
ME-ES-3083	19841	ME-ES-3095	19823	ME-ES-3096	19824
ME-ES-3098	19826	ME-ES-3099	19827	ME-ES-4181	59843
ME-ES-4953	52809	ME-ES-6129	19846	ME-ES-6129	19848
ME-ES-6310	19847	ME-ES-6310	19849	ME-ES-6330	49800
ME-ES-6339	49805	ME-ES-6340	49806	ME-ES-6342	49836
ME-ES-6344	49830	ME-LS-0435	49840HPS	ME-LS-0436	49841HPS
ME-LS-0489	49834HPS	ME-LS-0726	49812HPS	ME-LS-1654	59847HPS
ME-LS-1759	49895	ME-LS-1759	49895HPS	ME-LS-1977	59854
ME-LS-1978	59855	ME-LS-2060	52806HPS	ME-LS-2252	52800
ME-LS-2254	52801	ME-LS-2386	59901HPS	ME-LS-2714	59845
ME-LS-2726	59833	ME-LS-2727	59834	ME-LS-2857	59904
ME-LS-3316	59858HPS	ME-LS-3542	52804HPS	ME-LS-3819	52805HPS

Die aufgeführten Vergleichsnummern dienen nur zur besseren Identifikation.
References are only specified for a better identification.
Les références mentionées ne servent qu' á une meilleure identification.

MOOG	MAPCO	MOOG	MAPCO	MOOG	MAPCO
ME-LS-3907	59856	ME-LS-4890	52813	ME-LS-4891	52814
ME-LS-5618	52815	ME-SB-1121	36924	ME-SB-1194	33936
ME-SB-1209	33836	ME-SB-1277	36910	ME-SB-1354	33841
ME-SB-1357	33979	ME-SB-1593	36911	ME-SB-1594	33943
ME-SB-1595	33944	ME-SB-1623	33838	ME-SB-1631	33942
ME-SB-1645	33973	ME-SB-2256	37836	ME-SB-2275	36947
ME-SB-2732	33883	ME-SB-2733	36988	ME-SB-2743	36922
ME-SB-3650	33946	ME-SB-3716	36838	ME-SB-3996	37834
ME-SB-4187	36832	ME-SB-4437	33970	ME-SB-4472	33865
ME-SB-4476	36972	ME-SB-4494	33977	ME-SB-4496	36899
ME-SB-4498	36923	ME-SB-4512	33874	ME-SB-4518	36925
ME-TC-0129	49803	ME-TC-0130	49804	ME-TC-0728	19820
ME-TC-0731	19819	ME-TC-0732	19817	ME-TC-0987	59881
ME-TC-0988	59882	ME-TC-1959	59884	ME-TC-1960	59885
ME-TC-1961	51852	ME-TC-1962	51853	ME-TC-1968	51837
ME-TC-1969	51838	ME-TC-1970	51835	ME-TC-1971	51836
ME-TC-1972	51856	ME-TC-1973	51857	ME-TC-1974	51858
ME-TC-1975	51859	ME-TC-2746	49893	ME-TC-3077	19842
ME-TC-3078	19843	ME-TC-3870	51832	ME-TC-3871	51833
ME-TC-3872	51830	ME-TC-3873	51831	ME-TC-3874	59879
ME-TC-3875	59880	ME-TC-3994	51842	ME-TC-3995	51843
ME-TC-4182	59876	ME-TC-4183	59877	ME-TC-4184	59878
ME-TC-4185	59874	ME-TC-6068	49896	ME-TC-6069	49897
ME-TC-6336	49819	ME-TC-6337	49820	ME-WP-0606	49821
ME-WP-0607	49822	ME-WP-0684	49809	ME-WP-0685	49808
ME-WP-0733	49815	ME-WP-0734	49816	ME-WP-0735	49817
ME-WP-0736	49818	ME-WP-0839	49828	ME-WP-0840	49829
ME-WP-1532	49814/2	ME-WP-1533	49814/1	ME-WP-2250	59801
ME-WP-2251	59802	ME-WP-2716	51855	ME-WP-2741	59836
ME-WP-2742	59837	MI-AX-1299	59307	MI-AX-1732	59306
MI-AX-2915	19541	MI-AX-2936	19550	MI-AX-3325	59308
MI-AX-4438	59206	MI-BJ-0350	49248	MI-BJ-0351	49247
MI-BJ-10012	59223	MI-BJ-10013	59224	MI-BJ-10348	19542
MI-BJ-10371	49578	MI-BJ-10371	49255	MI-BJ-10377	19551
MI-BJ-10384	19552	MI-BJ-104247	19555	MI-BJ-104248	19554
MI-BJ-104249	19553	MI-BJ-4865	59539	MI-ES-0176	19549
MI-ES-0682	19548	MI-ES-1629	19598	MI-ES-2171	19510
MI-ES-2171	49249	MI-ES-2194	59221	MI-ES-2197	59220
MI-ES-2245	19545	MI-ES-2246	19546	MI-ES-2347	49256
MI-ES-2937	19540	MI-ES-2937	19547	MI-ES-3044	59310
MI-LS-1615	59541HPS	MI-LS-2237	49909	MI-LS-2268	49245
MI-LS-2376	59540HPS	MI-LS-2385	59510HPS	MI-LS-2765	59511HPS
MI-LS-2768	59542	MI-LS-2776	49226HPS	MI-LS-3317	19543HPS
MI-LS-4702	51543	MI-LS-4703	51544	MI-LS-5076	51545HPS
MI-LS-5077	51546	MI-PA-0479	59305	MI-PA-190160	59340
MI-PA-4402	59304	MI-TC-1628	49940	MI-TC-1677	49941
MI-WP-0407	49541	MI-WP-0408	49540	MI-WP-1261	49244
MI-WP-1269	49243	MI-WP-1766	59356	MI-WP-1767	59357
MI-WP-2763	49241	MI-WP-2764	49242	MI-WP-2766	59398

Die aufgeführten Vergleichsnummern dienen nur zur besseren Identifikation.
References are only specified for a better identification.
Les références mentionées ne servent qu' á une meilleure identification.

MOOG	MAPCO	MOOG	MAPCO	MOOG	MAPCO
MI-WP-2767	59399	NI ES 2276	59257	NI-AX-1268	19521
NI-AX-1603	59360	NI-AX-1701	19530	NI-AX-1795	59528
NI-AX-2809	59525	NI-BJ-0182	59523	NI-BJ-0183	19537
NI-BJ-0311	59522	NI-BJ-10015	59325	NI-BJ-10389	19535
NI-BJ-104139	19536	NI-BJ-10418	19524	NI-BJ-10423	59520
NI-BJ-1256	19526	NI-DS-1253	49524	NI-ES-0200	59229
NI-ES-0201	59527	NI-ES-0310	19528	NI-ES-0757	59228
NI-ES-1254	19523	NI-ES-1258	19525	NI-ES-2276	19520
NI-ES-2472	59254	NI-ES-2473	59259	NI-ES-2608	19556
NI-ES-2777	59225	NI-ES-2780	59524	NI-ES-2814	59255
NI-ES-3002	19534	NI-ES-3051	19533	NI-LS-0766	19527HPS
NI-LS-1155	59851	NI-LS-1168	49525HPS	NI-LS-1169	19529HPS
NI-LS-1674	49222HPS	NI-LS-2307	51281	NI-LS-2308	51282
NI-LS-2778	59226HPS	NI-LS-2804	51520	NI-LS-2805	51521
NI-LS-4714	51526	NI-LS-5735	51525HPS	NI-SB-0776	33501
NI-SB-1826	33507	NI-SB-4692	33504	NI-SB-4693	33505
NI-TC-0566	49527	NI-TC-0567	49526	NI-WP-0180	49523
NI-WP-0181	49522	NI-WP-0326	49521	NI-WP-0327	49520
NI-WP-0554	49538	NI-WP-0555	49539	NI-WP-0559	49531
NI-WP-0560	49530	NI-WP-0989	49535	NI-WP-0990	49534
NI-WP-1206	59322	NI-WP-1207	59321	NI-WP-1790	49220
NI-WP-1791	49221	NI-WP-2224	49141	NI-WP-2226	49142
NI-WP-2244	49528	NI-WP-2245	49529	NI-WP-2781	51527
NI-WP-2788	59358	NI-WP-2789	59359	NI-WP-2795	51529
NI-WP-2796	51530	NI-WP-2802	51284	NI-WP-2803	51285
NI-WP-3229	51528	OP-AX-0611	49604	OP-AX-0659	59367
OP-AX-1230	49607	OP-AX-2083	49622	OP-AX-2194	49602
OP-AX-3537	49603	OP-AX-5392	19805	OP-AX-5576	49754
OP-AX-5577	49755	OP-AX-5581	19628	OP-AX-5581	19627
OP-BJ-0177	49744	OP-BJ-0312	19632	OP-BJ-0467	19717
OP-BJ-0812	49610	OP-BJ-1504	49745	OP-BJ-1504	49616
OP-BJ-4870	49092	OP-BJ-5352	19816	OP-BJ-5375	19714
OP-BJ-5393	19801	OP-BJ-5559	19617	OP-BJ-5560	19618
OP-BJ-5567	19802	OP-BJ-5567	19612	OP-BJ-5583	19621
OP-DS-0750	19559HPS	OP-DS-5376	59295	OP-DS-5398	49760
OP-DS-5402	19803/1	OP-DS-5406	19804/1	OP-DS-5409	19602HPS
OP-DS-5561	49750	OP-DS-5564	49751	OP-DS-5574	19607
OP-DS-5586	19813	OP-DS-5587	19812	OP-ES-0480	19631
OP-ES-0514	19637	OP-ES-0514	19638	OP-ES-1501	49743
OP-ES-1501	49742	OP-ES-2081	49620	OP-ES-2082	49621
OP-ES-2814	49626	OP-ES-2818	49618	OP-ES-2819	49619
OP-ES-3620	49627	OP-ES-4921	59012	OP-ES-5363	19710
OP-ES-5366	19711	OP-ES-5377	19718	OP-ES-5380	19719
OP-ES-5554	19613	OP-ES-5555	49600	OP-ES-5555	19615
OP-ES-5556	19614	OP-ES-5557	19616	OP-ES-5557	49601
OP-ES-5562	19610	OP-ES-5565	19611	OP-ES-5569	19800
OP-ES-5579	19626	OP-ES-5588	49759	OP-ES-5589	49758
OP-LS-0993	33727	OP-LS-1786	59849	OP-LS-1994	33726
OP-LS-2080	49749HPS	OP-LS-2811	19811HPS	OP-LS-4706	51303

Die aufgeführten Vergleichsnummern dienen nur zur besseren Identifikation.
References are only specified for a better identification.
Les références mentionées ne servent qu' á une meilleure identification.

MOOG	MAPCO	MOOG	MAPCO	MOOG	MAPCO
OP-LS-4707	51302	OP-LS-4850	19639	OP-LS-5575	19606HPS
OP-LS-5582	19600HPS	OP-SB-0203	33768	OP-SB-0443	33796
OP-SB-1331	33793	OP-SB-1376	33725	OP-SB-1377	33714
OP-SB-1378	33733	OP-SB-1379	33715	OP-SB-1380	33849
OP-SB-1381	33716	OP-SB-1382	33848	OP-SB-1383	33731
OP-SB-1384	33732	OP-SB-1385	33794	OP-SB-1624	33786
OP-SB-1644	33757	OP-SB-2812	36703	OP-SB-3621	33877
OP-SB-3779	33787	OP-SB-3811	33737	OP-SB-3813	33895
OP-SB-3816	33720	OP-SB-4068	33785	OP-SB-4083	33758
OP-SB-4088	33756	OP-SB-4089	33792	OP-SB-4094	33739
OP-SB-4450	33879	OP-SB-4451	33753	OP-SB-4456	33736
OP-SB-4497	33766	OP-SB-4545	33734	OP-TC-0084	19809
OP-TC-0085	19808	OP-TC-0488	19636	OP-TC-0489	19635
OP-TC-1955	49623	OP-TC-1956	49624	OP-WP-0068P	19620
OP-WP-0069P	19619	OP-WP-0210P	19622	OP-WP-0211P	19623
OP-WP-0343	19624	OP-WP-0568P	19630	OP-WP-0569P	19629
OP-WP-0670	19633	OP-WP-0671	19634	OP-WP-0833	49291
OP-WP-0836	49290	OP-WP-0995	49609	OP-WP-0996	49608
OP-WP-1902	49615	OP-WP-1903	49614	OP-WP-2822	49612
OP-WP-2823	49613	OP-WP-5570	49756	OP-WP-5571	49757
OP-WP-5572	19807	OP-WP-5573	19806	PE-AX-0847	19374
PE-AX-0860	19379	PE-AX-0862	19380	PE-AX-1570	19373
PE-AX-2059	19479	PE-AX-3327	19395	PE-AX-3696	19405
PE-AX-3915	19353	PE-AX-4740	49314	PE-AX-5704	19355/1
PE-AX-5706	19354/1	PE-AX-5717	19323	PE-AX-5746	19340
PE-AX-5746	19410	PE-AX-5747	19324	PE-AX-6906	19446/1
PE-AX-6907	19336/1	PE-AX-7067	49315	PE-BJ-0409	19371
PE-BJ-0837	19372	PE-BJ-3187	19358	PE-BJ-3188	19359
PE-BJ-3195	19307	PE-BJ-3322	49309	PE-BJ-3323	19394
PE-BJ-3347	19425	PE-BJ-3356	19428	PE-BJ-3357	19419
PE-BJ-4087	19422	PE-BJ-4249	19415	PE-BJ-4281	19312
PE-BJ-6908	19319	PE-BJ-6909	19320	PE-DS-5041	19338HPS
PE-DS-5043	19365	PE-DS-5702	19354	PE-DS-5702	19355
PE-DS-5707	19339HPS	PE-DS-6294	19446	PE-DS-6294	19335
PE-DS-6902	19325	PE-DS-6903	19326	PE-DS-6904	19370HPS
PE-DS-6923	19336	PE-DS-6924	19340/1	PE-DS-6970	19367
PE-ES-0088	19342	PE-ES-0089	19341	PE-ES-0664	19481
PE-ES-1656	19381	PE-ES-1668	19382	PE-ES-3330	19393
PE-ES-3331	19392	PE-ES-4163	49312	PE-ES-4164	49313
PE-ES-5042	19430	PE-ES-5042	19078	PE-ES-5703	19301
PE-ES-5721	19315	PE-ES-5722	19316	PE-ES-5723	19417
PE-ES-5724	19418	PE-LS-0592	19362HPS	PE-LS-0595	19429HPS
PE-LS-0785	19368HPS	PE-LS-0799	19375HPS	PE-LS-1048	19363
PE-LS-1118	19364	PE-LS-1573	19348HPS	PE-LS-1626	19476HPS
PE-LS-3324	19396	PE-LS-3325	19397	PE-LS-3326	49303
PE-LS-3989	49305HPS	PE-LS-3990	49304HPS	PE-LS-5046	19337HPS
PE-SB-0251	33317	PE-SB-1137	33001	PE-SB-1138	33006
PE-SB-1301	33313	PE-SB-1301	33415	PE-SB-1303	33416
PE-SB-1304	33417	PE-SB-1310	33314	PE-SB-1314	33307

Die aufgeführten Vergleichsnummern dienen nur zur besseren Identifikation.
References are only specified for a better identification.
Les références mentionées ne servent qu' á une meilleure identification.

MOOG	MAPCO	MOOG	MAPCO	MOOG	MAPCO
PE-SB-1316	33322	PE-SB-1317	33320	PE-SB-1318	33318
PE-SB-1319	33319	PE-SB-1320	33336	PE-SB-1321	33316
PE-SB-1828	33305	PE-SB-3866	33333	PE-SB-4743	33436
PE-SB-4744	33435	PE-SB-4963	33315	PE-TC-0076	19327
PE-TC-0078	19329	PE-TC-0079	19328	PE-TC-0079	19330
PE-TC-0218	19344	PE-TC-0219	19345	PE-TC-0999	19384
PE-TC-1032	19383	PE-TC-1033	49301	PE-TC-1034	49302
PE-TC-1035	19487	PE-TC-1036	19488	PE-TC-1571	19347
PE-TC-1572P	19346	PE-TC-3196	19314	PE-TC-3196	19318
PE-TC-3197	19317	PE-TC-3197	19313	PE-TC-3198P	19310
PE-TC-3199P	19311	PE-TC-3538	19398	PE-TC-3539	19399
PE-TC-5033	19350	PE-TC-5034	19349	PE-TC-5037	19442
PE-TC-5038	19441	PE-TC-5039	19469	PE-TC-5040	19468
PE-TC-5711	19351	PE-TC-5712	19352	PE-WP-0328	19333
PE-WP-0329	19334	PE-WP-0329P	19475/1	PE-WP-0330	19331/1
PE-WP-0337	19332/1	PE-WP-0626P	19360	PE-WP-0627P	19361
PE-WP-3320	49320	PE-WP-3321	49321	PE-WP-4027	49318
PE-WP-4028	49319	PE-WP-4741	49310	PE-WP-4742	49311
PE-WP-6979P	19322	PE-WP-6980P	19321	RE-AX-0380	19188
RE-AX-0589	49117/1	RE-AX-0602	19174	RE-AX-0675	49103
RE-AX-0676	19171	RE-AX-0855	19194	RE-AX-0858	49119
RE-AX-0859	49126	RE-AX-1060	49145	RE-AX-1564	19193
RE-AX-1616	19183	RE-AX-2087	19182	RE-AX-2091	49149
RE-AX-2097	49125	RE-AX-2103	49159	RE-AX-3851	19195
RE-AX-4014	51117/1	RE-AX-4253	19103	RE-AX-4265	19121
RE-AX-4280	19129/1	RE-AX-4298	19166/1	RE-AX-7001	19152
RE-AX-7006	19198	RE-AX-7046	19149	RE-AX-7056	19156/1
RE-BJ-0471	49116	RE-BJ-0526	19102	RE-BJ-0531	19112
RE-BJ-0532	19111	RE-BJ-0811	49139	RE-BJ-0811	19109
RE-BJ-1040	49111	RE-BJ-2098	49110	RE-BJ-2302	49140
RE-BJ-2832	49151	RE-BJ-4260	19122	RE-BJ-4261	19123
RE-BJ-4266	19116	RE-BJ-4267	19115	RE-BJ-4271	19135
RE-BJ-4275	49106	RE-BJ-4276	49105	RE-BJ-4281	19128
RE-BJ-4295	19127	RE-BJ-5745	19132	RE-BJ-7025	19143
RE-DS-0856	19172	RE-DS-0857	19173	RE-DS-2827	49114
RE-DS-2828	49115	RE-DS-7002	19153	RE-DS-7003	19154
RE-DS-7004	19106	RE-DS-7009	19107	RE-DS-7013	19151
RE-DS-7017	19126	RE-DS-7018	19150	RE-DS-7018	19150/1
RE-DS-7022	49107	RE-DS-7022	19166	RE-DS-7044	19159
RE-DS-7045	19160	RE-DS-7057	19164	RE-DS-7057	19164HPS
RE-DS-7058	19161	RE-DS-7059	19156	RE-ES-0426	49112
RE-ES-0427	49113	RE-ES-0672	49135	RE-ES-0673	49136
RE-ES-0809	49137	RE-ES-0810	49138	RE-ES-0852	49144
RE-ES-0853	49143	RE-ES-1562	19190	RE-ES-1563	19189
RE-ES-2092	49147	RE-ES-2093	49148	RE-ES-3755	49192
RE-ES-3756	49193	RE-ES-4252	19105	RE-ES-4256	19108
RE-ES-4273	19136	RE-ES-4277	49104	RE-ES-4287	19133
RE-ES-4288	19134	RE-ES-4289	19114	RE-ES-4290	19113
RE-ES-7014	19130	RE-ES-7015	19130/1	RE-ES-7016	19131

Die aufgeführten Vergleichsnummern dienen nur zur besseren Identifikation.
References are only specified for a better identification.
Les références mentionées ne servent qu' á une meilleure identification.

MOOG	MAPCO	MOOG	MAPCO	MOOG	MAPCO
RE-ES-7023	19144	RE-ES-7024	19145	RE-ES-7026	19139
RE-ES-7027	19140	RE-ES-7053	19169	RE-ES-7053	19180
RE-ES-7053	49100	RE-ES-7054	49101	RE-ES-7054	19181
RE-ES-7054	19170	RE-ES-7060	19142	RE-ES-7061	19141
RE-LS-1072	49121HPS	RE-LS-2088	49124HPS	RE-LS-2095	49118HPS
RE-LS-2100	19120HPS	RE-LS-3072	49120HPS	RE-LS-4008	33172
RE-LS-5740	49160	RE-SB-1166	33118	RE-SB-1167	33164
RE-SB-1264	33117	RE-SB-1333	33100	RE-SB-1334	33146
RE-SB-1335	33130	RE-SB-1336	33129	RE-SB-1337	33143
RE-SB-1338	33144	RE-SB-1339	33147	RE-SB-1340	33148
RE-SB-1341	33170	RE-SB-1342	33171	RE-SB-1343	33165
RE-SB-1659	33102	RE-SB-1660	33101	RE-SB-1719	33145
RE-SB-2834	33167	RE-SB-3167	33116	RE-SB-3168	33115
RE-SB-3746	33127	RE-SB-3846	36704	RE-SB-4191	33173
RE-SB-4713	33123	RE-WP-0226	19177	RE-WP-0227	19178
RE-WP-0228	19157	RE-WP-0229	19158	RE-WP-0338	19197
RE-WP-0339	19196	RE-WP-0340	19186	RE-WP-0341	19187
RE-WP-0850	49129	RE-WP-0851	49130	RE-WP-2089	49133
RE-WP-2090	49134	RE-WP-2101	49152	RE-WP-2300	49132
RE-WP-2301P	49131	RE-WP-3489	49127	RE-WP-3490	49128
RE-WP-3744	49190	RE-WP-3745	49191	RE-WP-7030	19137
RE-WP-7031	19138	RE-WP-7032	19148	RE-WP-7032	19168
RE-WP-7033	19147	RE-WP-7033	19167	RE-WP-7036	19162
RE-WP-7037	19163	RE-WP-7040	19125	RE-WP-7041	19124
RO-AX-2843	49911	RO-BJ-104170	19507	RO-BJ-1496	59683
RO-BJ-2022	49648	RO-BJ-3409	19951	RO-BJ-3545	19949
RO-BJ-3552	19955	RO-ES-1492	59680	RO-ES-1494	59681
RO-ES-2095	59319	RO-ES-3153	19504	RO-ES-3154	19505
RO-ES-3446	59371	RO-ES-3446	59372	RO-ES-3547	19956
RO-LS-1831	19957	RO-LS-1984	59517HPS	RO-LS-1985	59518HPS
RO-LS-1986	59516HPS	RO-SB-2840	33960	RO-WP-0504	49216
RO-WP-0505	49215	RO-WP-1980	51690	RO-WP-1981	51691
RO-WP-2008	49903	RO-WP-2009	49904	SA-AX-1810	49606
SA-BJ-0556	19983	SA-BJ-4903	19980	SA-ES-4902	19982
SA-ES-4904	19981	SA-ES-4907	49752	SA-ES-4910	49753
SA-LS-2846	49980	SA-SB-2849	33015	SA-SB-4533	49981
SA-WP-2844	19984	SA-WP-2845	19985	SA-WP-3339	49982
SE-LS-2850	51862	SE-TC-7509	19064	SK-BJ-0413	59810
SK-BJ-0414	59811	SK-BJ-8223	19962	SK-DS-0415	59808
SK-DS-0416	59809	SK-ES-8222	19961	SK-SB-4031	19993
SK-SB-4719	33950	SK-WP-0662	19971	SK-WP-0663	19972
SU-AX-2866	59364	SU-AX-2869	49559	SU-BJ-0373	59297
SU-BJ-104141	49560	SU-BJ-104197	49556	SU-DS-3075	49555
SU-ES-2031	49558	SU-ES-2032	49557	SU-ES-3076	49554
SU-LS-4118	59596	SZ-AX-1182	59317	SZ-AX-1271	59298
SZ-AX-1693	49596	SZ-AX-5082	51251	SZ-BJ-0608	59324
SZ-ES-0103	49562	SZ-ES-0613	49561	SZ-ES-0765	59320
SZ-ES-2562	49564	SZ-ES-2563	49563	SZ-ES-2610	59201
SZ-LS-5081	51255	SZ-SB-5085	33577	SZ-TC-1156	49595

Die aufgeführten Vergleichsnummern dienen nur zur besseren Identifikation.
References are only specified for a better identification.
Les références mentionées ne servent qu' á une meilleure identification.

MOOG	MAPCO	MOOG	MAPCO	MOOG	MAPCO
SZ-TC-1188	49293	SZ-TC-1238	49292	SZ-TC-2029P	19518
SZ-TC-4440	49519	SZ-WP-2896	51590	SZ-WP-2897	51591
TO-AX-0619	49288	TO-AX-1280	49287	TO-AX-1297	59270
TO-AX-1297	49289	TO-AX-1636	19566	TO-AX-1637	59263
TO-AX-1640	19567	TO-AX-1696	59266	TO-AX-1730	59264
TO-AX-1740	59294	TO-AX-1784	19574	TO-AX-2383	59332
TO-AX-2833	59328	TO-AX-2975	51382	TO-AX-2976	19564
TO-AX-2977	19565	TO-AX-3008	59293	TO-AX-3015	51390
TO-AX-3018	59267	TO-AX-3321	59268	TO-AX-3397	59265
TO-BJ-0204	19563	TO-BJ-0352	19571	TO-BJ-0508	59563
TO-BJ-0538	49552	TO-BJ-0790	59235	TO-BJ-10006	59323
TO-BJ-10028	59236	TO-BJ-10032	59335	TO-BJ-104110	19568
TO-BJ-104111	19561	TO-BJ-104111	19569	TO-BJ-104111	19562
TO-BJ-104188	59260	TO-BJ-10435	59261	TO-BJ-10443	59334
TO-BJ-10444	59318	TO-BJ-1635	59566	TO-BJ-1734	59567
TO-BJ-3001	51388	TO-BJ-3002	51389	TO-BJ-3009	59353
TO-BJ-3010	59354	TO-BJ-3011	51564	TO-BJ-4227	59568
TO-BJ-4237	59564	TO-ES-0230	59281	TO-ES-0231	59277
TO-ES-0374	49567	TO-ES-0375	49566	TO-ES-0509	59274
TO-ES-0683	59273	TO-ES-0740	59561	TO-ES-0741	59560
TO-ES-1664	59238	TO-ES-2382	19560	TO-ES-2508	59278
TO-ES-2509	59282	TO-ES-2977	51380	TO-ES-2978	51381
TO-ES-3003	51567	TO-ES-3024	59280	TO-ES-3034	59239
TO-ES-3395	59279	TO-ES-3396	59275	TO-ES-4979	59237
TO-LS-0376	19573	TO-LS-1146	49579HPS	TO-LS-1191	49270HPS
TO-LS-1191	49271HPS	TO-LS-1648	19576	TO-LS-1662	19575
TO-LS-1663	49284HPS	TO-LS-1663	49283HPS	TO-LS-1663	49283
TO-LS-1676	59362HPS	TO-LS-1676	49284	TO-LS-2976	51597HPS
TO-LS-2980	51577HPS	TO-LS-2983	51373HPS	TO-LS-2993	49237HPS
TO-LS-3000	59363HPS	TO-LS-3367	51377HPS	TO-LS-3984	51378HPS
TO-LS-4120	51371	TO-LS-4128	51372	TO-LS-4157	51575
TO-LS-4167	49238	TO-LS-4168	49239	TO-LS-4709	49280HPS
TO-LS-4710	49281HPS	TO-LS-4733	51391	TO-LS-4981	51568
TO-LS-4982	51573	TO-LS-4997	51374HPS	TO-LS-5141	49274HPS
TO-LS-6580	51392	TO-PA-190101	59240	TO-SB-1936	33561
TO-WP-0804	49569	TO-WP-0807	49568	TO-WP-1074	49272
TO-WP-1075	49273	TO-WP-1076	49575	TO-WP-1082	49574
TO-WP-1683	49571	TO-WP-1709	49551	TO-WP-1729	49570
TO-WP-1797	51554	TO-WP-1799	51555	TO-WP-1951	59285
TO-WP-2230	49258	TO-WP-2231	49257	TO-WP-2234	51560
TO-WP-2235	51561	TO-WP-3867	49550	TO-WP-4320	49276
TO-WP-4330	49277	VO DL 3253	51805	VO ES 8285	59896
VO-AX-0358	49866	VO-AX-0383	49672/1	VO-AX-1867	51723
VO-AX-2313	51722	VO-AX-3225	19891/1	VO-AX-7159	49674/1
VO-AX-7181	52719	VO-AX-8275	19696/1	VO-AX-8291	49738
VO-BJ-0319	49861	VO-BJ-0370	49859	VO-BJ-0609	51800
VO-BJ-0610	51801	VO-BJ-0657	19881	VO-BJ-1859	51725
VO-BJ-1860	51724	VO-BJ-1990	51721	VO-BJ-3030	19857
VO-BJ-3227	19875	VO-BJ-3245	19852	VO-BJ-3246	19851

Die aufgeführten Vergleichsnummern dienen nur zur besseren Identifikation.
References are only specified for a better identification.
Les références mentionées ne servent qu' á une meilleure identification.

MOOG	MAPCO	MOOG	MAPCO	MOOG	MAPCO
VO-BJ-3254	19876	VO-BJ-3269	19884	VO-BJ-3270	19883
VO-BJ-3917	19893	VO-BJ-3918	19894	VO-BJ-7108	19879
VO-BJ-7108	19879/1	VO-BJ-7154	19889	VO-BJ-7154	19889/1
VO-BJ-7184	19679/1	VO-BJ-7184	19679	VO-BJ-7192	19868
VO-BJ-7193	19869	VO-BJ-8248	19896/1	VO-BJ-8248	19896
VO-BJ-8249	19895	VO-BJ-8249	19895/1	VO-BJ-8287	49702/1
VO-BJ-8287	49702	VO-BJ-8288	49703/1	VO-BJ-8288	49703
VO-BJ-9003	19856	VO-DS-0796	51806	VO-DS-1548	49691
VO-DS-1549	49690	VO-DS-1622	49767	VO-DS-2183	49766
VO-DS-3055	51745	VO-DS-3224	19891	VO-DS-3266	19887
VO-DS-3924	49761	VO-DS-3925	49762	VO-DS-7105	19888
VO-DS-7121	19899	VO-DS-7123	49878	VO-DS-7137	19860
VO-DS-7140	19861	VO-DS-7142	19892	VO-DS-7155	19871
VO-DS-7156	19872	VO-DS-7180	19862	VO-DS-7182	19863
VO-DS-7187	19853HPS	VO-DS-7190	49873	VO-DS-7191	49874
VO-DS-8204	49672	VO-DS-8205	49673	VO-DS-8226	49732
VO-DS-8244	19689	VO-DS-8245	19688	VO-DS-8250	49774
VO-DS-8251	49773	VO-DS-8256	49866/2	VO-DS-8257	49866/1
VO-DS-8264	49674	VO-DS-8265	49675	VO-DS-8281	49869
VO-DS-8284	49870	VO-ES-0368	59814	VO-ES-0369	59815
VO-ES-0510	51823	VO-ES-0511	51822	VO-ES-0615	51810
VO-ES-0618	51807	VO-ES-1506	49701	VO-ES-1507	49700
VO-ES-1835	51803	VO-ES-1868	51826	VO-ES-1869	51827
VO-ES-2314	51719	VO-ES-2315	51720	VO-ES-2404	51712
VO-ES-2405	51711	VO-ES-3026	19850	VO-ES-3058	51742
VO-ES-3059	51743	VO-ES-3226	19874	VO-ES-7106	19878
VO-ES-7139	59816	VO-ES-7139	19877	VO-ES-8000	19882
VO-ES-8215	19859	VO-ES-8216	19866	VO-ES-8217	19880
VO-ES-8218	19867	VO-ES-8227	49707OES	VO-ES-8227	49707HPS
VO-ES-8246	19886	VO-ES-8246	49872	VO-ES-8247	49871
VO-ES-8247	19885	VO-ES-8255	19873	VO-ES-8258	49858
VO-ES-8259	49857	VO-ES-8283	59895	VO-LS-0157	49682
VO-LS-0318	49856HPS	VO-LS-0356	49684/1OES	VO-LS-0356	49684OES
VO-LS-0357	49683OES	VO-LS-0357	49683/1OES	VO-LS-0418	51829HPS
VO-LS-0456	49794	VO-LS-0463	49862	VO-LS-0463	49862/1
VO-LS-0475	49867	VO-LS-0494	59812HPS	VO-LS-1087	49851
VO-LS-1088	49865	VO-LS-1089	49863	VO-LS-1165	49860
VO-LS-1516	49850	VO-LS-1870	51825HPS	VO-LS-2311	51718HPS
VO-LS-2406	49793	VO-LS-2419	49716	VO-LS-2421	49686
VO-LS-2422	59894	VO-LS-3053	51824	VO-LS-3353	51821
VO-LS-4398	51734	VO-LS-4916	49868	VO-LS-8240	49714
VO-RK-5000	59818/1HPS	VO-SB-0042	33912	VO-SB-0428	36950
VO-SB-0430	36948	VO-SB-1177	33893	VO-SB-1189	33833
VO-SB-1195	33928	VO-SB-1212	33908	VO-SB-1325	33820
VO-SB-1329	33819	VO-SB-1358	33818	VO-SB-1359	33828
VO-SB-1360	33907	VO-SB-1361	33842	VO-SB-1362	33876
VO-SB-1364	33932	VO-SB-1365	33840	VO-SB-1366	33839
VO-SB-1367	33834	VO-SB-1368	33835	VO-SB-1369	33903
VO-SB-2337	36949	VO-SB-3052	33871	VO-SB-3076	33929

Die aufgeführten Vergleichsnummern dienen nur zur besseren Identifikation.
References are only specified for a better identification.
Les références mentionées ne servent qu' á une meilleure identification.

MOOG	MAPCO	MOOG	MAPCO	MOOG	MAPCO
VO-SB-3223	33859	VO-SB-4169	33858	VO-SB-4445	33909
VO-SB-4446	33926	VO-SB-4449	33872	VO-SB-4452	33916
VO-SB-4463	33914	VO-SB-4466	33897	VO-SB-4471	33900
VO-SB-4475	33896	VO-SB-4478	33826	VO-SB-4482	33937
VO-SB-4492	33915	VO-SB-4493	33913	VO-SB-4523	36852
VO-SB-4535	33945	VO-SB-4857	33912/2	VO-SB-5010	33987
VO-TC-0586	52718	VO-TC-0892	51710OES	VO-TC-4000P	49680OES
VO-TC-4001P	49681OES	VO-TC-4932	51876	VO-TC-4933	51877
VO-TC-4935	51878	VO-TC-4936	51879	VO-TC-8228P	49710OES
VO-TC-8229P	49708OES	VO-TC-8230P	49709OES	VO-WP-0131	49770
VO-WP-0132	49769	VO-WP-0232	19691	VO-WP-0232	19690/1
VO-WP-0233	19690	VO-WP-0235P	19686/1	VO-WP-0236	19686
VO-WP-0450	49876	VO-WP-0451	49877	VO-WP-0529	49667
VO-WP-0529	49665	VO-WP-0530	49664	VO-WP-0530	49666
VO-WP-0737	49768	VO-WP-1116	59813	VO-WP-1519P	51820
VO-WP-1520P	51819	VO-WP-1552	49704	VO-WP-1552	49704/2
VO-WP-1553	49704/1	VO-WP-1861	51716	VO-WP-1862	51715
VO-WP-1864	51727	VO-WP-1989	59813/2	VO-WP-2316	51731
VO-WP-2317	51732	VO-WP-235	19687	VO-WP-3060	52714
VO-WP-3061	52715	VO-WP-8209	19855/2	VO-WP-8209	19855/1
VO-WP-8210	19858/1	VO-WP-8210	19858/2	VO-WP-8210	19858
VO-WP-8221P	19870	VO-WP-8254	19870/2	VO-WP-8254	19870/1
VV-AX-0027	49910	VV-AX-0398	49964	VV-AX-3147	49923
VV-AX-3280	49952	VV-AX-3518	49954	VV-AX-5511	49928
VV-AX-5530	49943	VV-AX-5531	49900	VV-AX-5539	49942
VV-AX-5551	49917	VV-AX-5556	49944	VV-AX-9950	49918
VV-BJ-0893	49924	VV-BJ-3284	19907	VV-BJ-4399	49955
VV-BJ-5292	19902	VV-BJ-5293	19901	VV-BJ-5513	19909
VV-BJ-5554	19912	VV-DS-0019	19914HPS	VV-ES-0367	19908
VV-ES-1090	49921	VV-ES-1091	49922	VV-ES-3283	19906
VV-ES-4019	49966	VV-ES-4021	49965	VV-ES-5548	19911
VV-ES-5549	19910	VV-LS-0014	49905HPS	VV-LS-0482	19937HPS
VV-LS-0482	19937	VV-LS-1096	49916HPS	VV-LS-1099	19913
VV-LS-1119	49906HPS	VV-LS-2112	49947HPS	VV-LS-2381	19915
VV-LS-4170	19903	VV-LS-4171	19938	VV-LS-5514	49901HPS
VV-LS-5515	49902HPS	VV-SB-2321	36975	VV-SB-2351	33917
VV-SB-3630	33550/1	VV-SB-3632	33551/1	VV-SB-3633	33924
VV-SB-4519	33923	VV-WP-0360	49962	VV-WP-0379	49963
VV-WP-1093	49907	VV-WP-1093	49544	VV-WP-1094	49545
VV-WP-1094	49908	VV-WP-1525	49913	VV-WP-1526	49912
VV-WP-3638	49919	VV-WP-3639	49920	VV-WP-3640	51602
VV-WP-3645	51603	VV-WP-3657	49914	VV-WP-3658	49915
VV-WP-3950	49958	VV-WP-3951	49959		

NIPPARTS	MAPCO	NIPPARTS	MAPCO	NIPPARTS	MAPCO
J4805001	59303	J4805002	59304	J4805013	59340
J4820302	59342	J4820302	49518	J4820303	19580
J4820400	19557	J4820501	19510	J4820502	19512
J4820502	59586	J4820507	59203	J4820900	59211
J4820901	19718	J4820905	19517	J4821000	19520

Die aufgeführten Vergleichsnummern dienen nur zur besseren Identifikation.
References are only specified for a better identification.
Les références mentionées ne servent qu' á une meilleure identification.

NIPPARTS	MAPCO	NIPPARTS	MAPCO	NIPPARTS	MAPCO
J4821000	59257	J4821000	19528	J4821008	19556
J4821009	59254	J4821010	19534	J4821012	19523
J4821014	59255	J4821017	59256	J4821021	59524
J4821024	19525	J4821033	19533	J4821034	59528
J4821069	59227	J4821070	59228	J4821082	59225
J4821092	49137	J4821093	49143	J4821097	59258
J4821099	59229	J4822001	19560	J4822004	59279
J4822005	59274	J4822009	59278	J4822010	59238
J4822015	59273	J4822017	49566	J4822027	59276
J4822028	59281	J4822036	59280	J4822048	59560
J4822049	59561	J4822063	51380	J4822076	59237
J4822080	59282	J4823001	19583	J4823007	19589
J4823007	19595	J4823010	59338	J4823011	59350
J4823011	19589	J4823024	51340	J4823033	51342
J4824000	59319	J4824001	19504	J4824003	59371
J4824005	19500	J4824005	19508	J4824009	59313
J4824010	59315	J4824011	59314	J4824016	59515
J4824019	49264	J4825000	19546	J4825001	59221
J4825002	49256	J4825003	59310	J4825003	59205
J4825007	19540	J4825007	19547	J4825011	19549
J4825026	19545	J4825027	49249	J4825028	59220
J4825029	19548	J4826000	19531	J4826001	59216
J4826004	59207	J4826007	19597	J4827001	49554
J4827002	49557	J4828001	59320	J4828002	49563
J4828004	59201	J4828005	49562	J4828014	49561
J4829002	49742	J4830900	19719	J4831003	59526
J4831012	49138	J4831013	49144	J4831014	59527
J4832000	59275	J4832002	49567	J4832008	59277
J4832010	59239	J4833001	51341	J4833003	51343
J4834000	19505	J4834002	59372	J4834003	19509
J4834010	59311	J4834011	59312	J4834011	59249
J4834015	49265	J4835005	59222	J4836000	19532
J4836001	59215	J4836005	19598	J4836008	59209
J4837000	49558	J4838001	49564	J4839003	49743
J4840302	51533	J4840500	59570	J4840500	59574
J4840501	19515	J4840501	59571	J4840502	59575
J4840503	59336	J4840504	59555	J4840505	59339
J4840506	59573	J4840509	59719	J4840510	59553
J4840514	59554	J4840521	59572	J4840522	59556
J4840700	59206	J4840900	59217	J4840902	59295
J4840905	59717	J4840907	59718	J4841005	19530
J4841006	19521	J4841012	59360	J4841012	59253
J4841020	59525	J4841036	49155	J4841037	49125
J4842005	59263	J4842011	59266	J4842014	49288
J4842015	49287	J4842016	59294	J4842018	59328
J4842019	59268	J4842019	59272	J4842020	59265
J4842021	59264	J4842024	19564	J4842025	19565
J4842026	19567	J4842034	59267	J4842035	59332
J4842040	51382	J4842049	59293	J4842053	49289

Die aufgeführten Vergleichsnummern dienen nur zur besseren Identifikation.
References are only specified for a better identification.
Les références mentionées ne servent qu' á une meilleure identification.

NIPPARTS	MAPCO	NIPPARTS	MAPCO	NIPPARTS	MAPCO
J4842054	51390	J4843003	19588	J4843010	59232
J4843010	49586	J4843011	19599	J4843023	19594
J4843024	19584	J4843030	19581	J4843032	59349
J4843038	59715	J4843039	19644	J4843053	51344
J4844000	59246	J4844003	59247	J4844005	59557
J4844006	59512	J4844007	19506	J4844012	59513
J4844018	59558	J4844019	19502	J4844020	59514
J4845008	59535HPS	J4845008	59536	J4845008	59308
J4845009	19550	J4845012	19541	J4845017	59307
J4845019	59306	J4846002	59214	J4847002	49555
J4847006	59362HPS	J4847006	59364	J4848004	59298
J4848005	49596	J4848006	59313	J4848006	59317
J4850900	59296	J4853008	59231	J4853038	59714
J4857000	49559	J4860304	59337	J4860305	59346
J4860501	19511	J4860502	19513	J4860503	59580
J4860504	59329	J4860507	49255	J4860509	59585
J4860902	19519	J4860904	51300	J4861000	59521
J4861006	59520	J4861007	59325	J4861020	19524
J4861023	19536	J4861024	19522	J4861024	59522
J4861026	59523	J4861030	19526	J4861033	59598
J4862000	59569	J4862001	59567	J4862002	59565
J4862005	59335	J4862007	59334	J4862008	59563
J4862010	59260	J4862012	19568	J4862012	19561
J4862013	59323	J4862015	59318	J4862018	59566
J4862019	59568	J4862022	59234	J4862024	19571
J4862028	19563	J4862028	49552	J4862032	59353
J4862033	51388	J4863000	19582	J4863000	59326
J4863001	19585	J4863007	49589	J4863010	19587
J4864000	19503	J4864001	19507	J4864002	49510
J4864004	59333	J4865000	19552	J4865003	19542
J4865004	49578	J4865005	19554	J4865007	49248
J4865010	59224	J4867000	49556	J4867001	49560
J4867003	59297	J4868000	59324	J4869000	49616
J4869004	49745	J4871003	59599	J4872000	19569
J4872000	19562	J4872001	59564	J4872004	51389
J4875003	19555	J4881000	19537	J4881001	19535
J4882000	59236	J4882003	59261	J4882006	59235
J4882008	51383	J4884011	51504	J4885000	19553
J4885001	59327	J4885001	49247	J4885002	19551
J4889000	49744	J4889001	59290	J4890501	59581
J4890503	59204	J4890514	49252	J4890904	49297
J4891002	49524	J4891003	51526	J4891009	19527HPS
J4891013	49227HPS	J4891018	51525HPS	J4891027	59851
J4891028	49219	J4892008	49579HPS	J4892016	51377HPS
J4892017	49238	J4892018	49239	J4892025	51575
J4892030	49285	J4892042	51576	J4892043	51371
J4892044	51372	J4893003	19590HPS	J4893014	51336
J4893015	51610	J4893016	59534	J4894005	49502
J4894005	59502	J4894013	49202	J4894014	49201

Die aufgeführten Vergleichsnummern dienen nur zur besseren Identifikation.
References are only specified for a better identification.
Les références mentionées ne servent qu' á une meilleure identification.

NIPPARTS	MAPCO	NIPPARTS	MAPCO	NIPPARTS	MAPCO
J4894019	51507HPS	J4894020	51508HPS	J4894021	59241
J4894022	59242	J4895002	19544	J4895012	51545HPS
J4895013	51546	J4895014	49245	J4895015	49909
J4895015	49905HPS	J4897000	59596	J4900306	51582
J4900311	59384	J4900311	59385	J4900504	59292
J4900506	51216	J4900508	59576/1	J4900508	59576
J4900510	59376	J4900511	49940	J4900512	51220
J4900514	51234	J4900515	59378	J4900516	51218
J4900903	49597	J4900903	49290	J4900905	51296
J4900906	49756	J4900906	49757	J4900909	51294
J4901000	49528	J4901003	49534	J4901004	49522
J4901007	49530	J4901016	49520	J4901017	49220
J4901020	51286	J4901022	51284	J4901024	49538
J4901025	49536	J4901027	51527	J4901030	51529
J4901031	59358	J4902001	59374	J4902003	49574
J4902004	49572	J4902004	49550	J4902005	49570
J4902011	59288	J4902015	49272	J4902021	51554
J4902022	49276	J4902025	49568	J4902028	49576
J4902028	49257	J4902030	59380	J4902030	59380/1
J4902032	59391	J4902035	51552	J4902039	51561
J4902039	51560	J4903002	49580	J4903003	49584
J4903004	49230	J4903007	49582	J4903015	49236
J4903016	51531	J4903020	59389	J4903022	59394
J4903024	49233	J4903025	59368	J4904003	59330
J4904005	49213	J4904006	49508	J4904007	49209
J4904010	59506	J4904010	59502HPS	J4904011	49500
J4904014	49216	J4904014	49215	J4904015	49217
J4905000	49241	J4905001	59356	J4905002	59398
J4905007	49540	J4905008	49542	J4905012	49544
J4905012	49545	J4905020	59283	J4906001	59213
J4908000	19518	J4908002	49565	J4908003	59289
J4908004	49292	J4908006	49595	J4910306	51583
J4910504	59291	J4910506	51217	J4910508	59577/1
J4910508	59577	J4910510	59377	J4910511	49941
J4910512	51221	J4910514	51235	J4910515	59379
J4910516	51219	J4910903	49598	J4910903	49291
J4910905	51297	J4910909	51295	J4911000	49529
J4911003	49535	J4911004	49523	J4911007	49531
J4911009	59322	J4911009	59321	J4911016	49521
J4911017	49221	J4911020	51287	J4911022	51285
J4911024	49539	J4911025	49537	J4911027	51528
J4911030	51530	J4911031	59359	J4912001	59375
J4912003	49575	J4912004	49551	J4912004	49573
J4912005	49571	J4912011	59287	J4912015	49273
J4912021	51555	J4912022	49277	J4912025	49569
J4912026	49577	J4912028	49258	J4912030	59381
J4912030	59381/1	J4912032	59392	J4912035	51553
J4913002	49581	J4913003	49585	J4913004	49231
J4913007	49583	J4913020	59390	J4913022	59395

Die aufgeführten Vergleichsnummern dienen nur zur besseren Identifikation.
References are only specified for a better identification.
Les références mentionées ne servent qu' á une meilleure identification.

NIPPARTS	MAPCO	NIPPARTS	MAPCO	NIPPARTS	MAPCO
J4913025	59369	J4914003	59331	J4914005	49214
J4914006	49509	J4914007	49210	J4914010	59507
J4914011	49501	J4914015	49218	J4915000	49242
J4915001	59357	J4915002	59399	J4915007	49541
J4915008	49543	J4915020	59284	J4916003	59212
J4918004	49293	J4920302	59382	J4920500	59386
J4921001	49526	J4922002	59285	J4922003	51571
J4923002	49235	J4924001	49506	J4924002	49205
J4924003	49211	J4924004	49511	J4924005	59508
J4924006	49513	J4924008	49260	J4924014	51500
J4925000	49546	J4925003	49243	J4930302	59383
J4930500	59387	J4931001	49527	J4932002	59286
J4932003	51572	J4932008	49951	J4933002	49234
J4934001	49507	J4934002	49206	J4934003	49212
J4934004	49512	J4934005	59509	J4934005	49503
J4934006	49514	J4934008	49261	J4934014	51501
J4935000	49547	J4935003	49244	J4940310	51215
J4943000	59370	J4944001	49203	J4944002	49504
J4945003	59396	J4948000	49549	J4948002	49599
J4954001	49204	J4954002	49263	J4954002	49505
J4955003	59397	J4958000	49548	J4960300	59344
J4960300	59344HPS	J4960301	59341HPS	J4960301	59341
J4960302	51230	J4960303	59343HPS	J4960303	59345
J4960308	59589	J4960310	59582HPS	J4960310	59583
J4960311	51532	J4960500	19543HPS	J4960500	59551
J4960506	59578	J4960513	49250HPS	J4960518	59351HPS
J4960518	59351	J4960519	49253	J4960900	19559HPS
J4960902	49295	J4960904	51290HPS	J4960915	19558HPS
J4961000	59226HPS	J4961004	51281	J4961007	19538
J4961019	49224HPS	J4961022	19529HPS	J4961028	49222HPS
J4961029	19120HPS	J4961030	59250	J4962000	19574
J4962003	19573	J4962005	19576	J4962006	19577
J4962019	49237HPS	J4962019	49237	J4962021	51373HPS
J4962022	51569	J4962026	51597	J4962026	51597HPS
J4962031	51588	J4962033	49274HPS	J4962034	51577HPS
J4962044	51573	J4962045	49283HPS	J4962045	49283
J4962046	51584	J4962046	51584HPS	J4962047	49259
J4962050	51391	J4963001	19591HPS	J4963004	19516
J4963009	59388HPS	J4963009	59388	J4963010	19592HPS
J4963010	59533	J4963015	51334HPS	J4963016	19774HPS
J4963016	19774	J4964000	51505	J4964007	59501
J4964020	59244	J4964026	49517	J4965000	59542
J4965001	59309	J4965003	59540HPS	J4965005	59546
J4965006	59544	J4965012	51543	J4967001	59597
J4967001	59595	J4968000	59300	J4968001	51593
J4968001	59850	J4969000	59849	J4970512	49251HPS
J4970518	59355HPS	J4970518	59355	J4970903	49296
J4971005	51282	J4971008	19539	J4971030	59251
J4972004	19575	J4972007	19578	J4972032	51589

Die aufgeführten Vergleichsnummern dienen nur zur besseren Identifikation.
References are only specified for a better identification.
Les références mentionées ne servent qu' á une meilleure identification.

NIPPARTS	MAPCO	NIPPARTS	MAPCO	NIPPARTS	MAPCO
J4972046	51585	J4972046	51585HPS	J4973015	51335HPS
J4974008	59500	J4974020	59243	J4975007	59547
J4975012	51544	J4979001	19811HPS	J4979001	19811
N4848013	51251	N4900317	51232	N4910317	51233
N4960319	51241	N4960522	51226	N4968004	51255
N4970519	51227	49590HPS	49590HPS		

QUINTON HAZELL	MAPCO	QUINTON HAZELL	MAPCO	QUINTON HAZELL	MAPCO
EMBK2057	36138	EMBK2061	36124	EMBK2062	36129
EMBK2063	36131	EMBK2064	36128	EMBK2065	36305
EMBK2066	36403	EMBK2067	36304	EMBK2070	36139
EMBK2071	36140	EMBK2073	36401	EMBK2074	36400
EMBK2075	36300	EMBK2076	36120	EMBK2077	36126
EMBK2078	36127	EMBK2079	36130	EMBK2080	36143
EMBK2081	36144	EMBK2082	36145	EMBK2084	36700
EMBK2087	36306	EMBK2250	36123	EMBK2252	36122
EMBK2253	36121	EMBK2254	36404	EMBK2255	36402
EMBK2256	36301	EMBK2257	36302	EMBK2258	36303
EMBK2259	36125	EMBK2400	36405	EMBK2401	36600
EMBK2402	36601	EMBK2405	36701	EMBK2406	36310
EMBK2407	36307	EMBK2408	36137	EMBK2409	36407
EMBK2410	36406	EMBK2411	36408	EMBK2412	36308
EMBK2413	36132	EMBK2414	36133	EMBK2415	36136
EMBK2416	36309	EMBK2417	36134	EMBK2418	36135
EMBK2601	19206	EMBK2652	33890	EMB1857	33629/2
EMB1862	33628	EMB1984	33734	EMB2031	33115
EMB2031	33103	EMB2032	33104	EMB2107	33740
EMB2122	33145	EMB2137	33311/1	EMB2138	33311/2
EMB2139	33311	EMB2144	33844	EMB2159	33906
EMB2164	33845	EMB2214	33117	EMB2419	36904
EMB2510	33889/2	EMB2606	33670	EMB2608	33673
EMB2609	33674	EMB2614	33105	EMB2615	33118
EMB2619	33167	EMB2620	33168	EMB2621	33169
EMB2635	33735	EMB2637	33730	EMB2642	33760
EMB2643	33729	EMB2644	33755	EMB3037	33403
EMB3041	33409	EMB3042	33323	EMB3045	33420
EMB3046	33400	EMB7011	33904	EMB7020	33324
EMB7021	33325	EMB7025	33644	EMB7026	33791
EMB7027	36914	EMB7028	33907	EMB7034	33116
EMB7036	33889/3	EMB7043	33939	EMB7044	33940
EMB7054	33697	EMB7063	33671	EMB7065	33631
EMB7073	33337	EMB7079	33424	EMB7090	33630
EMB7122	33927	EMB7123	37837	EMD9001	29795
EMS1850	33818	EMS1851	33616	EMS1852	33617
EMS1855	33520	EMS1855	33223	EMS1858	33416
EMS1859	33417	EMS1864	33725	EMS1865	33714
EMS1867	33842	EMS1869	33785	EMS1893	33820
EMS1944	33847	EMS1950	33917	EMS1961	33714/9
EMS1962	33877	EMS1985	33733	EMS1987	33757
EMS1988	33848	EMS1989	33314	EMS1989	33414

Die aufgeführten Vergleichsnummern dienen nur zur besseren Identifikation.
References are only specified for a better identification.
Les références mentionées ne servent qu' á une meilleure identification.

QUINTON HAZELL	MAPCO	QUINTON HAZELL	MAPCO	QUINTON HAZELL	MAPCO
EMS1991	33313	EMS1991	33415	EMS1992	33306
EMS1993	33322	EMS1994	33320	EMS1997	33819
EMS2094	33003	EMS2109	33793	EMS2113	33102
EMS2125	33146	EMS2176	33129	EMS2177	33130
EMS2186	33100	EMS2207	33307	EMS2209	33305
EMS2420	33871	EMS2420	33871/4	EMS2423	33858/2
EMS2423	33858	EMS2430	33896	EMS2431	33808
EMS2433	33826/4	EMS2433	33826	EMS2440	33901
EMS2442	33891	EMS2447	33892	EMS2454	33893
EMS2457	33788	EMS2469	33695/2	EMS2469	33695
EMS2472	33690	EMS2472	33690/2	EMS2492	36971
EMS2499	33874	EMS2513	33689	EMS2523	33609
EMS2523	33677	EMS2524	33035	EMS2534	33319
EMS2540	33994	EMS2603	33326	EMS2634	33752
EMS2645	33715	EMS2646	33618	EMS2647	33716
EMS2651	33835	EMS2657	33636	EMS2658	33635
EMS2659	33903	EMS2660	33017	EMS2663	33834
EMS2665	33016	EMS2666	33015	EMS2668	33143
EMS2671	33691	EMS2672	33666	EMS2672	33639
EMS2673	33638	EMS2675	36670	EMS2691	33839
EMS2692	33840	EMS2693	33932	EMS2694	36915
EMS2694	33876	EMS2696	33006	EMS2697	33001
EMS2698	33732	EMS2699	33731	EMS2699	33794
EMS2720	33614	EMS2721	33615	EMS3021	33019
EMS3022	33437	EMS3023	33426	EMS3024	33425
EMS3025	33147	EMS3026	33148	EMS3027	33170
EMS3028	33171	EMS3029	33318	EMS3030	33144
EMS3085	33786	EMS3196	33316	EMS3197	33317
EMS4045	33912	EMS4047	33902	EMS4082	33937
EMS4104	33643	EMS4107	33909	EMS4127	33762
EMS8003	33960	EMS8004	33524	EMS8004	33521
EMS8004	33221	EMS8005	33527	EMS8006	33220
EMS8014	33533	EMS8023	33550	EMS8023	33550/1
EMS8024	33551	EMS8024	33551/1	EMS8031	33678
EMS8032	33333	EMS8033	33849	EMS8039	33007
EMS8040	33676	EMS8045	33908	EMS8046	33928
EMS8048	33950	EMS8049	33570	EMS8050	33571
EMS8053	33878	EMS8054	33846	EMS8055	19994
EMS8057	33165	EMS8058	33530	EMS8059	33531
EMS8060	33534	EMS8061	33500	EMS8062	19993
EMS8065	33011	EMS8066	33012	EMS8067	33101
EMS8069	33504	EMS8070	33505	EMS8070	33506
EMS8071	33315	EMS8072	33944	EMS8073	33943
EMS8074	33501	EMS8075	33502	EMS8078	33768
EMS8079	33796	EMS8081	33014	EMS8082	33008
EMS8083	33013	EMS8084	33010	EMS8085	33503
EMS8088	33923	EMS8091	36975	EMS8095	33222
EMS8097	33859	EMS8098	33929	EMS8105	33838
EMS8108	33507	EMS8114	33936	EMS8115	33841

Die aufgeführten Vergleichsnummern dienen nur zur besseren Identifikation.
References are only specified for a better identification.
Les références mentionées ne servent qu' á une meilleure identification.

QUINTON HAZELL	MAPCO	QUINTON HAZELL	MAPCO	QUINTON HAZELL	MAPCO
EMS8117	33973	EMS8122	33637	EMS8122	33637/2
EMS8124	33641	EMS8125	33970	EMS8127	33787
EMS8128	33720	EMS8133	59621	EMS8137	36911
EMS8145	33934	EMS8153	33646	EMS8154	33647
EMS8158	37836	EMS8160	33563	EMS8167	33541
EMS8173	33522	EMS8174	33528	EMS8184	33511
EMS8189	33431	EMS8190	33335	EMS8191	33334
EMS8192	33434	EMS8193	33336	EMS8194	33121
EMS8195	33122	EMS8196	36704	EMS8197	36705
EMS8208	36703	EMS8210	36939	EMS8221	36961
EMS8222	36962	EMS8227	36772	EMS8228	36950
EMS8230	36949	EMS8275	33526	EMS8299	33120
EMS8316	33523	EMS8350	33436	EMS8351	33435
EMS8356	33987	EM1711	33828	EM1896	33321
EM1914	33330	EM2431	33898	EM2434	33833/2
EM2434	33833	EM2438	33827	EM2441	33830
EM2445	33829	EM2448	33894	EM2491	36899
EM2497	33942	EM2498	33865	EM2517	33329
EM3418	33899	EM4231	33433	QDL1760S	19324/1
QDL1776S	19323	QDL1776S	19354/1	QDL1776S	19354
QDL1776S	19355	QDL2049S	49730	QDL2056S	19821
QDL2073S	51805	QDL2079S	19892	QDL2103S	19326
QDL2104S	19325	QDL2107S	19340/1	QDL2142S	19804/1
QDL2143S	19803/1	QDL2154S	19325/1	QDL2172S	19107
QDL2173S	19150	QDL2174S	19151	QDL2175S	19129
QDL2175S	19129/1	QDL2181S	19126	QDL2194S	19335
QDL2194S	19446	QDL2217S	19899	QDL2236S	49878
QDL2243S	49107	QDL2243S	19166	QDL2245S	49761
QDL2246S	49762	QDL2247S	19860	QDL2248S	19861
QDL2378S	19106	QDL2427S	49660	QDL2428S	49731
QDL2429S	49658	QDL2449S	19444	QDL2450S	19445
QDL2510S	19830/1	QDL2510S	19831/1	QDL2520S	49846
QDL2521S	49844	QDL2570S	49760	QDL2604S	19871
QDL2605S	19872	QDL2612S	51806	QDL2694S	19822
QDL2695S	19825	QDL2696S	49898	QDL2696S	49899
QDL2698S	19829	QDL2699S	19891	QDL2701S	19675
QDL2713S	59865	QDL2714S	19837	QDL2728S	19682
QDL2729S	19683	QDL2745S	19154	QDL2746S	19153
QDL2752S	19862	QDL2753S	19865	QDL2753S	49874
QDL2754S	19863	QDL2755S	19864	QDL2755S	49873
QDL2771S	49750	QDL2772S	49751	QDL2780S	19159
QDL2781S	19160	QDL2786S	49780	QDL2787S	49781
QDL2850S	49763	QDL2851S	49782	QDL2852S	49783
QDL2853S	49785	QDL2873S	49801	QDL2878S	49672
QDL2879S	49673	QDL2882S	49674	QDL2883S	49675
QDL2886S	49766	QDL2887S	49767	QDL2907S	19336
QDL2926S	19820	QDL2937S	49813	QDL2950S	51870
QDL2951S	51871	QDL2955S	49789	QDL2956S	49790
QDL2958S	49741	QDL2962S	49721	QDL2963S	49722

Die aufgeführten Vergleichsnummern dienen nur zur besseren Identifikation.
References are only specified for a better identification.
Les références mentionées ne servent qu' á une meilleure identification.

QUINTON HAZELL	MAPCO	QUINTON HAZELL	MAPCO	QUINTON HAZELL	MAPCO
QDL2966S	49732	QDL2976S	19161	QDL2977S	19156
QDL3018S	19688	QDL3019S	19689	QDL3021S	49886
QDL3029S	19813	QDL3030S	19812	QDL3038S	49866/2
QDL3039S	49866/1	QDL3039S	49866	QDL3045S	49870
QDL3047S	49869	QDL3165S	19786	QDL3170S	49716
QDL3180S	59893	QDL3185S	59800	QDL3188S	49888
QDL3189S	49889	QDL3190S	49890	QDL3191S	49892
QDL3210S	49692	QDL3211S	49693	QDL3212S	49773
QDL3213S	49774	QDL3227S	19784	QDL3228S	19785
QDL3244S	19696	QDL3245S	19697	QDL3257S	49690
QDL3258S	49691	QDL3271S	59692	QDL3272S	59693
QDL3273S	59601	QDL3273S	59610	QDL3274S	59892
QDL3275S	59891	QDL4032S	19838	QDL5017S	19845
QDL5019S	19888	QDL5222S	59624	QDL5233S	19172
QDL5239S	19173	QDL5252S	49114	QDL5255S	19644/1
QDL5256S	19644/2	QDL5258S	59305	QDL5260S	59230
QDL5262S	49115	QDL5282S	59862	QDL5292S	51655
QDL5293S	51665	QDL5294S	51656	QDL9546S	49838
QD1117RHT	59658	QD2036S	19407	QD2399S	49646
QD2400S	49645	QD2765S	19748	QD2818S	59340
QLS1522S	19164	QLS1522S	19164HPS	QLS1550S	19026HPS
QLS1551S	49046	QLS1607S	19606HPS	QLS1613S	49856HPS
QLS1617S	49297	QLS1618S	59204	QLS1619S	59552HPS
QLS1625S	19590HPS	QLS1627S	19853HPS	QLS1652S	59667
QLS1711S	19780	QLS1712S	19781	QLS1747S	49032HPS
QLS1752S	49030HPS	QLS1754S	49652	QLS1755S	49796
QLS1757S	49031	QLS1758S	19527HPS	QLS1759S	49048
QLS1760S	49047	QLS1810S	51505	QLS1811S	49200HPS
QLS1813S	49298	QLS1813S	49298HPS	QLS1814S	19559HPS
QLS1815S	49295	QLS1816S	49296	QLS1817S	19957
QLS1820S	59551	QLS1821S	59543HPS	QLS1821S	59581
QLS1822S	49254HPS	QLS1822S	49254	QLS1823S	49253
QLS1827S	59343HPS	QLS1829S	59345	QLS1831S	59542
QLS1831S	19543HPS	QLS1832S	59309	QLS1833S	19544
QLS1834S	19592HPS	QLS1835S	49525HPS	QLS1837S	49524
QLS1840S	51526	QLS1841S	19574	QLS1843S	19573
QLS1844S	19575	QLS1845S	19576	QLS1846S	19577
QLS1846S	49270HPS	QLS1847S	19578	QLS1847S	49271HPS
QLS1848S	49579HPS	QLS1849S	49240	QLS1885S	19363
QLS1886S	19366	QLS1956S	33727	QLS1957S	33726
QLS1961S	19370HPS	QLS2146S	19339HPS	QLS2359S	49902HPS
QLS2533S	19915	QLS2541S	19937	QLS2541S	19937HPS
QLS2541S	19913	QLS2556S	49980	QLS2686S	33009
QLS2764S	19678HPS	QLS2789S	19602HPS	QLS2854S	19667HPS
QLS2910S	19605HPS	QLS2910S	19773HPS	QLS2915S	19476HPS
QLS2922S	59847HPS	QLS2922S	19839	QLS2923S	19819
QLS2923S	59830/1	QLS2924S	19817	QLS2924S	19818
QLS2967S	19603HPS	QLS2968S	49795HPS	QLS2997S	49663HPS
QLS3002S	49788	QLS3004S	49686	QLS3009S	59845

Die aufgeführten Vergleichsnummern dienen nur zur besseren Identifikation.
References are only specified for a better identification.
Les références mentionées ne servent qu' á une meilleure identification.

QUINTON HAZELL	MAPCO	QUINTON HAZELL	MAPCO	QUINTON HAZELL	MAPCO
QLS3010S	49893	QLS3054S	49868	QLS3060S	49862
QLS3060S	49862/1	QLS3062S	51862	QLS3063S	19337HPS
QLS3066S	49850	QLS3069S	19435HPS	QLS3072S	19451HPS
QLS3073S	19470	QLS3075S	19608HPS	QLS3075S	19604HPS
QLS3076S	19429HPS	QLS3077S	19338HPS	QLS3080S	33633
QLS3080S	33632	QLS3081S	33632/1	QLS3081S	33633/1
QLS3082S	19658	QLS3171S	49714	QLS3172S	49729
QLS3173S	49715	QLS3178S	49688	QLS3179S	49689
QLS3186S	49826	QLS3187S	49827	QLS3198S	19607/8HPS
QLS3198S	19607	QLS3200S	19600HPS	QLS3221S	49725
QLS3221S	49725HPS	QLS3222S	49726HPS	QLS3222S	49726
QLS3223S	59628HPS	QLS3224S	19700HPS	QLS3235S	49685OES
QLS3235S	49682	QLS3237S	49683/1OES	QLS3237S	49683OES
QLS3238S	49684OES	QLS3238S	49684/1OES	QLS3239S	19639
QLS3240S	19367	QLS3241S	59678	QLS3242S	59698
QLS3243S	59697	QLS3244S	59687	QLS3245S	59516HPS
QLS3248S	59679	QLS3249S	49860	QLS3250S	49867
QLS3251S	49905HPS	QLS3255S	49787	QLS3256S	19362HPS
QLS3257S	59501	QLS3258S	59500	QLS3260S	49033
QLS3261S	49034	QLS3262S	49786	QLS3263S	49840HPS
QLS3264S	49841HPS	QLS3265S	49843	QLS3266S	49108HPS
QLS3267S	49109HPS	QLS3268S	49865	QLS3269S	49851
QLS3270S	49863	QLS3271S	19364	QLS3272S	52712
QLS3273S	52713	QLS3275S	51593	QLS3276S	49799
QLS3277S	19028HPS	QLS3280S	51821	QLS3281S	19609HPS
QLS3282S	59648	QLS3283S	49226HPS	QLS3286S	49250HPS
QLS3287S	49251HPS	QLS3288S	49252	QLS3290S	59251
QLS3292S	49228	QLS3294S	19375HPS	QLS3295S	59517HPS
QLS3296S	59518HPS	QLS3302S	19938	QLS3304S	51600HPS
QLS3306S	19774	QLS3306S	19774HPS	QLS3307S	59695
QLS3308S	59694	QLS3309S	59614HPS	QLS3310S	49906HPS
QLS3311S	49749HPS	QLS3313S	19775HPS	QLS3313S	19775
QLS3315S	19777	QLS3316S	59854	QLS3317S	59855
QLS3318S	59546	QLS3319S	59547	QLS3320S	51377HPS
QLS3321S	49274HPS	QLS3322S	59894	QLS3323S	59901HPS
QLS3324S	59904	QLS3325S	49039HPS	QLS3326S	59637
QLS3328S	51825HPS	QLS3329S	51829HPS	QLS3330S	49118
QLS3331S	49124HPS	QLS3332S	49793	QLS3333S	49794
QLS3334S	19376HPS	QLS3336S	49895	QLS3337S	49812HPS
QLS3338S	49811HPS	QLS3339S	59859	QLS3340S	59860
QLS3341S	59833	QLS3342S	59834	QLS3347S	52800
QLS3348S	52801	QLS3349S	49909	QLS3350S	59613HPS
QLS3351S	59603	QLS3352S	59604	QLS3355S	49202
QLS3356S	49201	QLS3357S	49269HPS	QLS3358S	49268HPS
QLS3359S	59849	QLS3359S	19811	QLS3361S	51594HPS
QLS3361S	51594	QLS3362S	59535HPS	QLS3363S	59510HPS
QLS3363S	59510	QLS3364S	59511HPS	QLS3365S	59541HPS
QLS3367S	59597	QLS3369S	51230	QLS3371S	19776HPS
QLS3373S	49066	QLS3373S	49066HPS	QLS3374S	59623HPS

Die aufgeführten Vergleichsnummern dienen nur zur besseren Identifikation.
References are only specified for a better identification.
Les références mentionées ne servent qu' á une meilleure identification.

QUINTON HAZELL	MAPCO	QUINTON HAZELL	MAPCO	QUINTON HAZELL	MAPCO
QLS3375S	59631HPS	QLS3376S	51334HPS	QLS3377S	51335HPS
QLS3378S	51336	QLS3379S	19516	QLS3389S	59664HPS
QLS3395S	49916HPS	QLS3406S	59605HPS	QLS3407S	51371
QLS3408S	51372	QLS3414S	51642HPS	QLS3415S	51643HPS
QLS3418S	51646	QLS3419S	49303	QLS3426S	51255
QLS3433S	51332HPS	QLS3437S	51391	QLS3442S	51639HPS
QLS3442S	51639	QLS3443S	51640HPS	QLS3444S	51641HPS
QLS3446S	51290HPS	QLS3447S	51291HPS	QLS3455S	51541HPS
QLS3456S	51542HPS	QLS3471S	59344HPS	QLS3472S	59341HPS
QLS3475S	51610	QLS3482S	51545HPS	QLS3483S	51546
QLS3486S	59226HPS	QLS3487S	51281	QLS3488S	51282
QLS3496S	51373HPS	QLS3507S	51657	QLS3508S	51658
QLS3509S	51659	QLS3515S	51681	QLS3516S	51682
QLS3517S	51686	QLS3520S	51693	QLS3521S	51694
QLS3523S	52806HPS	QLS3527S	59026HPS	QLS3528S	49227HPS
QLS3532S	49146HPS	QLS3533S	52802	QLS3534S	52803
QLS3535S	49304HPS	QLS3536S	49305HPS	QLS3560S	52815
QLS3567S	51734	QLS3572S	52813	QLS3573S	52814
QLS3574S	59020	QLS3575S	59021	QLS3576S	59017
QLS3577S	59016	QLS3610S	51392	QLS3617S	51302
QLS3618S	51303	QLS3635S	49778	QLS5266S	19348HPS
QLS9237S	19365	QP631T	19416	QR1118S	19080
QR1360LHT	51807	QR1384S	19732	QR1415LH	19114
QR1415RH	19113	QR1555S	19906	QR1676S	19982
QR1707S	19105	QR1717S	19850	QR1718S	19040
QR1741S	19301	QR1752S	19710	QR1753S	19711
QR1768S	19108	QR1785S	19874	QR1828S	19719
QR1829S	19718	QR1833S	19736	QR1834S	19735
QR1835S	19890	QR1836S	19046	QR1837S	19042
QR1841S	19800	QR1843S	19136	QR1856S	59222
QR1988S	19510	QR1990S	59221	QR1993S	59220
QR2012S	59328	QR2025S	19452	QR2026S	19047
QR2034S	19406	QR2035S	19404	QR2046S	19660
QR2058S	19414	QR2059S	19413	QR2061S	49104
QR2064S	19420	QR2065S	49718	QR2066S	49717
QR2069S	19878	QR2084S	59320	QR2085S	59317
QR2086S	49564	QR2087S	49563	QR2105S	19316
QR2106S	19315	QR2118S	19405	QR2119S	19446/1
QR2119S	19410	QR2120S	19166/1	QR2121S	19121
QR2132S	19131	QR2134S	19723	QR2135S	19654
QR2136S	19805	QR2141S	19412	QR2157S	59319
QR2203S	19198	QR2212S	19745	QR2218S	49952
QR2221S	19556	QR2224S	59371	QR2225S	59372
QR2229S	59681	QR2230S	59680	QR2233S	19668
QR2234S	19669	QR2256S	19059	QR2263S	19501
QR2264S	19500	QR2265S	19502	QR2273S	59247
QR2274S	19090	QR2274S	19093	QR2275S	19092
QR2275S	19089	QR2287S	19580	QR2289S	19827
QR2289S	19824	QR2290S	19823	QR2291S	19826

Die aufgeführten Vergleichsnummern dienen nur zur besseren Identifikation.
References are only specified for a better identification.
Les références mentionées ne servent qu' á une meilleure identification.

QUINTON HAZELL	MAPCO	QUINTON HAZELL	MAPCO	QUINTON HAZELL	MAPCO
QR2298S	19848	QR2298S	19846	QR2299S	19849
QR2299S	19847	QR2304S	19540	QR2304S	19547
QR2308S	19546	QR2309S	19545	QR2312S	59255
QR2324S	19560	QR2327S	19565	QR2328S	19614
QR2329S	19613	QR2331S	19615	QR2334S	49753
QR2335S	49752	QR2356S	19908	QR2357S	49928
QR2358S	49944	QR2371S	19058	QR2377S	19727
QR2379S	19053	QR2380S	19052	QR2383S	19610
QR2384S	19611	QR2396S	49518	QR2396S	19595
QR2397S	19742	QR2397S	49882	QR2398S	19741
QR2401S	19417	QR2401S	19130/1	QR2402S	19418
QR2402S	19130	QR2405S	19007	QR2425S	19663
QR2426S	19664	QR2453S	59216	QR2454S	59214
QR2455S	59215	QR2459S	19531	QR2460S	19532
QR2463S	19017	QR2464S	19022/1	QR2464S	19022/2
QR2465S	19043	QR2465S	19022	QR2467S	19724
QR2473S	19740	QR2475S	19070	QR2486S	19081
QR2488S	19082	QR2494S	19581	QR2502S	19588
QR2517S	49847	QR2523S	49849	QR2524S	49880
QR2536S	49256	QR2544S	19541	QR2546S	19550
QR2574S	19956	QR2579S	59332	QR2585S	59279
QR2586S	59275	QR2587S	59265	QR2588S	59264
QR2597S	59278	QR2598S	59282	QR2609S	19887
QR2611S	51802	QR2629S	19324	QR2647S	19961
QR2650S	49606	QR2658S	49559	QR2668S	51803
QR2671S	19150/1	QR2684S	49554	QR2685S	49555
QR2687S	19752	QR2688S	19753	QR2689S	19134
QR2690S	19133	QR2705S	19750	QR2748S	59866
QR2749S	59867	QR2767S	19877	QR2769S	59296
QR2770S	59295	QR2773S	59367	QR2774S	49604
QR2775S	19859	QR2776S	19880	QR2777S	19866
QR2780S	49742	QR2781S	49743	QR2782S	19867
QR2783S	49848	QR2798S	59208	QR2799S	59207
QR2800S	19597	QR2801S	19598	QR2821S	19523
QR2822S	19521	QR2823S	19520	QR2823S	49532
QR2823S	59257	QR2826S	59228	QR2829S	59229
QR2830S	59527	QR2832S	49754	QR2833S	49755
QR2834S	19336/1	QR2835S	19141	QR2836S	19156/1
QR2837S	19142	QR2839S	19140	QR2840S	19139
QR2842S	19566	QR2843S	19567	QR2844S	19016
QR2848S	19692	QR2849S	19693	QR2856S	19078
QR2856S	19430	QR2858S	19447	QR2859S	19448
QR2860S	19065	QR2861S	19068	QR2862S	19079
QR2863S	19647	QR2865S	19757	QR2866S	19758
QR2867S	19504	QR2868S	19506	QR2869S	19505
QR2871S	19512	QR2874S	49800	QR2875S	59310
QR2889S	49764	QR2890S	49942	QR2890S	49900
QR2891S	19910	QR2892S	19911	QR2893S	49917
QR2894S	19144	QR2895S	19145	QR2896S	19188

Die aufgeführten Vergleichsnummern dienen nur zur besseren Identifikation.
References are only specified for a better identification.
Les références mentionées ne servent qu' á une meilleure identification.

QUINTON HAZELL	MAPCO	QUINTON HAZELL	MAPCO	QUINTON HAZELL	MAPCO
QR2896S	19149	QR2904S	59201	QR2926S	19645
QR2926S	19646	QR2933S	59281	QR2935S	19886
QR2935S	49872	QR2936S	19885	QR2936S	49871
QR2948S	59665	QR2948S	59657	QR2954S	49738
QR2972S	19170	QR2972S	19181	QR2973S	19169
QR2973S	19180	QR2985S	19627	QR2985S	19628
QR2988S	49858	QR2989S	49857	QR2992S	19583
QR2993S	49707OES	QR2993S	49707HPS	QR2995S	19782
QR2996S	19783	QR2998S	49739	QR2999S	49740
QR3007S	49881	QR3011S	49807	QR3012S	49805
QR3013S	49806	QR3014S	19833	QR3015S	19834
QR3017S	49884	QR3023S	19882	QR3024S	19873
QR3025S	49600	QR3026S	49601	QR3027S	49759
QR3028S	49758	QR3036S	19023	QR3037S	49644
QR3040S	59896	QR3041S	59895	QR3055S	49641
QR3056S	49640	QR3057S	49824	QR3058S	49823
QR3073S	49894	QR3076S	19443	QR3076S	19411
QR3078S	49101	QR3079S	49100	QR3081S	19480
QR3088S	49642	QR3089S	49643	QR3116S	49883
QR3158S	19174	QR3161S	19655	QR3162S	49737
QR3167S	19626	QR3196S	19638	QR3196S	19637
QR3201S	59816	QR3202S	59817	QR3219S	59814
QR3220S	59815	QR3229S	49653	QR3230S	49654
QR3231S	19649	QR3232S	19648	QR3233S	19650
QR3240S	19631	QR3250S	51822	QR3251S	51823
QR3259S	49700	QR3260S	49701	QR3264S	19722
QR3265S	19644	QR3267S	59672	QR3269S	59666
QR3272S	59586	QR3273S	59571	QR3274S	59572
QR3275S	19379	QR3276S	59806	QR3277S	59807
QR3280S	59294	QR3281S	19810	QR3284S	59640
QR3285S	59641	QR3286S	59642	QR3287S	59676
QR3289S	59669	QR3290S	59670	QR3292S	59663
QR3293S	59690	QR3294S	59691	QR3296S	49620
QR3297S	49621	QR3298S	49622	QR3299S	19479
QR3300S	19489	QR3301S	19490	QR3302S	49921
QR3303S	49922	QR3304S	49093	QR3305S	49927
QR3305S	49964	QR3306S	19762	QR3307S	59553
QR3310S	59307	QR3311S	49143	QR3312S	49144
QR3317S	19973	QR3320S	49611	QR3321S	49627
QR3322S	59600	QR3334S	59707OES	QR3335S	49147
QR3336S	49148	QR3337S	49149	QR3338S	49135
QR3339S	49136	QR3340S	19195	QR3341S	19194
QR3342S	51117/1	QR3345S	49117/1	QR3346S	49103
QR3347S	49119	QR3348S	49126	QR3350S	19492
QR3351S	19493	QR3352S	49074	QR3353S	49075
QR3355S	49098	QR3356S	59011	QR3359S	59873
QR3360S	59872	QR3361S	59840	QR3362S	59841
QR3363S	59844	QR3364S	59843	QR3365S	49155
QR3370S	59512	QR3375S	59513	QR3378S	49287

Die aufgeführten Vergleichsnummern dienen nur zur besseren Identifikation.
References are only specified for a better identification.
Les références mentionées ne servent qu' á une meilleure identification.

QUINTON HAZELL	MAPCO	QUINTON HAZELL	MAPCO	QUINTON HAZELL	MAPCO
QR3383S	51342	QR3384S	51343	QR3385S	51344
QR3387S	51341	QR3398S	49735	QR3399S	49736
QR3409S	19099	QR3436S	51250	QR3437S	51251
QR3442S	49965	QR3449S	51719	QR3450S	51720
QR3451S	51722	QR3454S	49938HPS	QR3457S	51298
QR3458S	51299	QR3488S	49159	QR3501S	51382
QR3502S	51380	QR3503S	51381	QR3532S	51653
QR3533S	51667	QR3534S	51668	QR3539S	51684
QR3546S	49312	QR3547S	49313	QR3548S	49314
QR3556S	59012	QR3557S	59013	QR3558S	51619
QR3559S	51620	QR3568S	51742	QR3569S	51743
QR3573S	49306	QR3574S	49307	QR3610S	51744
QR3610S	51745	QR3617S	49315	QR3618S	52809
QR3630S	51236	QR3631S	51237	QR3632S	51238
QR3634S	51689	QR3648S	59014	QR3649S	59015
QR3666S	59944	QR3682S	59770	QR3807S	49401
QR4082S	19891/1	QR4110LHT	19356	QR4110RHT	19357
QR4164S	19840	QR4165S	19841	QR4192S	19103
QR4193S	19152	QR5014S	19409	QR5086S	19483
QR5087S	19482	QR5088S	19481	QR5091S	19564
QR5093S	19616	QR5212S	49746	QR5213S	49053
QR5216S	19182	QR5218S	51723	QR5222S	49674/1
QR5224S	19534	QR5231S	59314	QR5232S	59249
QR5239S	59203	QR5240S	59205	QR5248S	59254
QR5249S	59258	QR5250S	19533	QR5251S	59524
QR5251S	59225	QR5256S	59239	QR5257S	59280
QR5258S	49911	QR5263S	51292	QR5264S	59717
QR5265S	59573	QR5267S	59719	QR5270S	59336
QR5276S	19584	QR5277S	19599	QR5283S	49137
QR5284S	49138	QR5285S	49125	QR5288S	49586
QR5289S	59560	QR5290S	59561	QR5292S	59684
QR5293S	59685	QR5306S	49690/1	QR5318S	49607
QR5320S	49010	QR5324S	51826	QR5325S	51827
QR5326S	51740	QR5327S	51741	QR5328S	19484
QR5329S	19477	QR5330S	19478	QR5331S	49400
QR5332S	49145	QR6001S	49672/1	QR6003S	19594
QR6004S	59231	QR900LHT	19836	QR900RHT	51850
QR900RHT	59897	QR9052S	19171	QR9053S	49112
QR9054S	49113	QR9066S	19193	QR9067S	19189
QR9068S	19190	QR9074S	19183	QR9115S	19013
QR9116S	19014	QR9128S	19530	QR9131S	59256
QR9133S	19525	QR9137S	51533	QR9159S	59526
QR9160S	59528	QR9161S	59263	QR9163S	49288
QR9164S	59277	QR9165S	59274	QR9165S	59273
QR9171S	59266	QR9178S	59237	QR9185S	51567
QR9192S	59246	QR9193S	49264	QR9193S	59313
QR9194S	49265	QR9194S	59312	QR9195S	59557
QR9199S	19508	QR9216S	51581	QR9231S	19341
QR9232S	19342	QR9233S	19353	QR9233S	19374

Die aufgeführten Vergleichsnummern dienen nur zur besseren Identifikation.
References are only specified for a better identification.
Les références mentionées ne servent qu' á une meilleure identification.

QUINTON HAZELL	MAPCO	QUINTON HAZELL	MAPCO	QUINTON HAZELL	MAPCO
QR9278S	59536	QR9278S	49910	QR9282S	59308
QR9283S	59306	QR9284S	19549	QR9285S	19548
QR9311S	59298	QR9312S	49562	QR9313S	49561
QR9331S	59339	QR9332S	59570	QR9334S	59574
QR9335S	59575	QR9336S	59555	QR9343S	59217
QR9345S	59211	QR9346S	19557	QR9346S	19517
QR9368S	59238	QR9370S	19509	QR9378S	49596
QR9531S	19373	QR9537S	49102	QR9539S	49115/1
QR9543S	49557	QR9544S	49558	QR9546S	49566
QR9547S	49567	QR9548S	59276	QR9549S	59268
QR9549S	59272	QR9901S	19029	QR9902S	19030
QR9903S	19018	QR9925S	19015	QR9926S	49017
QR9927S	49018	QR9933S	19589	QR9934S	19528
QR9936S	19382	QR9937S	19381	QR9961S	19641
QR9962S	19042	QR9963S	19069	QR9964S	19640
QR9969S	49830	QR9970S	49833	QR9971S	49837
QR9972S	49836	QR9975S	19024	QR9976S	51711
QR9977S	51712	QR9978S	49040	QR9979S	49043
QR9980S	59899	QR9982S	19380	QSA1001S	49706
QSA1001S	49706/1	QSA1004S	19168	QSA1006S	49705
QSA1006S	49705/1	QSA1009S	19167	QSA1014S	19687
QSA1015S	19686	QSA1038S	19350	QSA1039S	19349
QSA1044S	19328	QSA1045S	19327	QSA1062S	19050
QSA1063S	19051	QSA1083S	19055	QSA1084S	19054
QSA1295S	19670HPS	QSA1296S	19671HPS	QSA1348S	19066
QSA1349S	19067	QSA1355S	19760	QSA1356S	19761
QSA1359S	19471	QSA1360S	19472	QSA1373S	19454
QSA1374S	19453	QSA1375S	19322	QSA1376S	19321
QSA1385S	19330	QSA1386S	19329	QSA1393S	19178
QSA1394S	19177	QSA1395S	19187	QSA1396S	19186
QSA1397S	49734	QSA1398S	49733	QSA1424S	19769
QSA1425S	19768	QSA1426S	19620	QSA1427S	19619
QSA1428S	19756/2	QSA1429S	19755/2	QSA1431S	19756/4
QSA1432S	19755/4	QSA1444S	49769	QSA1444S	49769/1
QSA1445S	49770	QSA1445S	49770/1	QSA1446S	19858/1
QSA1447S	19858/2	QSA1448S	19870/1	QSA1449S	19870/2
QSA1450S	19690	QSA1451S	19691	QSA1452S	19686/1
QSA1469S	49757	QSA1470S	49756	QSA1471S	19756/3
QSA1472S	19755/3	QSA1473S	19756/1	QSA1474S	19755/1
QSA1499S	19344	QSA1500S	19345	QSA1515S	49877
QSA1516S	49876	QSA1519S	19870	QSA1530S	49775
QSA1531S	49776	QSA1532S	49704/2	QSA1533S	49704/1
QSA1538S	49507	QSA1539S	49506	QSA1540S	49503
QSA1541S	49502	QSA1544S	49521	QSA1545S	49520
QSA1546S	49523	QSA1547S	49522	QSA1548S	19197
QSA1549S	19196	QSA1550S	49904	QSA1551S	49903
QSA1563S	49819	QSA1564S	49820	QSA1567S	49815
QSA1568S	49816	QSA1569S	49817	QSA1570S	49818
QSA1648S	19629	QSA1649S	19630	QSA1650S	19756/5

Die aufgeführten Vergleichsnummern dienen nur zur besseren Identifikation.
References are only specified for a better identification.
Les références mentionées ne servent qu' á une meilleure identification.

QUINTON HAZELL	MAPCO	QUINTON HAZELL	MAPCO	QUINTON HAZELL	MAPCO
QSA1651S	19755/5	QSA1659S	19623	QSA1660S	19622
QSA1661S	19634	QSA1662S	19633	QSA1667S	49665
QSA1668S	49664	QSA1672S	49704	QSA1673S	19690/1
QSA1675S	49768	QSA1688S	59836	QSA1689S	59837
QSA1690S	49814/1	QSA1691S	49814/2	QSA1694S	49821
QSA1695S	49822	QSA1696S	49803	QSA1697S	49804
QSA1698S	49808	QSA1699S	49809	QSA1702S	49666
QSA1703S	49667	QSA1707S	49676/1	QSA1708S	49677/1
QSA1709S	19652	QSA1710S	19651	QSA1715S	51819
QSA1715S	51819/1	QSA1715S	51820	QSA1722S	49211
QSA1723S	49212	QSA1724S	49205	QSA1725S	49206
QSA1726S	49508	QSA1727S	49509	QSA1728S	49209
QSA1730S	49213	QSA1731S	49214	QSA1734S	49500
QSA1735S	49501	QSA1736S	49215	QSA1737S	49216
QSA1738S	49513	QSA1739S	49514	QSA1740S	59508
QSA1741S	59509	QSA1742S	49534	QSA1743S	49535
QSA1763S	49907	QSA1763S	49544	QSA1764S	19361
QSA1765S	19360	QSA1767S	49912	QSA1768S	49022
QSA1769S	49024	QSA1769S	49051	QSA1771S	49530
QSA1773S	49582	QSA1774S	49913	QSA1775S	49023
QSA1776S	49025	QSA1776S	49052	QSA1778S	49531
QSA1783S	49908	QSA1783S	49545	QSA1784S	49081
QSA1784S	49080	QSA1785S	49027	QSA1788S	49026
QSA1790S	49583	QSA1857S	49290	QSA1858S	49291
QSA1865S	51211	QSA1866S	51212	QSA1867S	51234
QSA1868S	51235	QSA1889S	59688	QSA1890S	59689
QSA1891S	51690	QSA1892S	51691	QSA1895S	19642
QSA1896S	19643	QSA1897S	19642/1	QSA1897S	19656
QSA1898S	19657	QSA1898S	19643/1	QSA1899S	19701/1
QSA1900S	19702/1	QSA1901S	19701	QSA1902S	19702
QSA1903S	19474	QSA1904S	19475	QSA1907S	49914
QSA1908S	49915	QSA1912S	49528	QSA1913S	49529
QSA1918S	49540	QSA1919S	49541	QSA1920S	49293
QSA1921S	49292	QSA1922S	49044	QSA1923S	49045
QSA1924S	49064	QSA1925S	49065	QSA1926S	49041
QSA1928S	19971	QSA1929S	19972	QSA1930S	49301
QSA1931S	49302	QSA1932S	49919	QSA1933S	49920
QSA1936S	59644	QSA1937S	59645	QSA1938S	59292
QSA1939S	59291	QSA1940S	49580	QSA1941S	49581
QSA1944S	59321	QSA1945S	59322	QSA1948S	19383
QSA1949S	19384	QSA1956S	51590	QSA1957S	51591
QSA1958S	49576	QSA1959S	49577	QSA1962S	49574
QSA1963S	49575	QSA1964S	49570	QSA1965S	49571
QSA1966S	49572	QSA1966S	49550	QSA1967S	49551
QSA1967S	49573	QSA1968S	49272	QSA1969S	49273
QSA1972S	49568	QSA1973S	49569	QSA1974S	49608
QSA1975S	49609	QSA1976S	19485	QSA1977S	19486
QSA1978S	59661	QSA1979S	59662	QSA1980S	59674
QSA1981S	59675	QSA1984S	59650	QSA1985S	59651

Die aufgeführten Vergleichsnummern dienen nur zur besseren Identifikation.
References are only specified for a better identification.
Les références mentionées ne servent qu' á une meilleure identification.

QUINTON HAZELL	MAPCO	QUINTON HAZELL	MAPCO	QUINTON HAZELL	MAPCO
QSA1986S	51663	QSA1987S	51664	QSA1990S	19385
QSA1991S	19386	QSA1992S	49958	QSA1993S	49959
QSA1994S	49036	QSA1995S	49037	QSA1996S	49962
QSA1997S	49963	QSA1998S	49536	QSA1999S	49537
QSA2000S	49623	QSA2001S	49624	QSA2002S	49936
QSA2003S	49937	QSA2006S	49217	QSA2007S	49218
QSA2008S	49260	QSA2009S	49261	QSA2012S	49131
QSA2013S	49132	QSA2016S	51726	QSA2017S	51727
QSA2018S	51715	QSA2019S	51716	QSA2020S	19390
QSA2021S	19391	QSA2026S	49133	QSA2027S	49134
QSA2028S	49127	QSA2029S	49128	QSA2031S	19148
QSA2040S	49082	QSA2041S	49083	QSA2048S	59801
QSA2049S	59802	QSA2052S	51854	QSA2053S	51855
QSA2058S	51852	QSA2059S	51853	QSA2074S	59900
QSA2075S	49597	QSA2076S	49598	QSA2077S	49612
QSA2078S	49613	QSA2079S	59654	QSA2080S	59655
QSA2085S	59930	QSA2086S	59931	QSA2087S	51602
QSA2088S	51603	QSA2091S	59376	QSA2092S	59377
QSA2093S	51330	QSA2094S	51331	QSA2095S	59358
QSA2095S	49151	QSA2095S	49152	QSA2096S	59359
QSA2097S	51529	QSA2098S	51530	QSA2099S	51284
QSA2100S	51285	QSA2101S	49614	QSA2102S	49615
QSA2103S	59380/1	QSA2103S	59380	QSA2104S	59381
QSA2104S	59381/1	QSA2105S	49320	QSA2106S	49321
QSA2107S	49084	QSA2108S	49085	QSA2115S	49086
QSA2116S	49087	QSA2117S	19331/1	QSA2118S	19475/1
QSA2118S	19332/1	QSA2220S	49141	QSA2221S	49142
QSA2246S	51286	QSA2254S	51731	QSA2255S	51732
QSA2257S	19399	QSA2262S	51296	QSA2263S	51297
QSA2270S	51220	QSA2271S	51221	QSA2282S	49584
QSA2283S	49585	QSA230S	19162	QSA231S	19163
QSA2326S	19097	QSA2327S	19098	QSA2330S	49310
QSA2331S	49311	QSA2342S	51623	QSA2352S	52714
QSA2360S	49318	QSA2361S	49319	QSA2370S	52816
QSA2371S	52817	QSA2384S	59022	QSA2385S	59023
QSA2390S	51232	QSA2391S	51233	QSA2396S	49316
QSA2397S	49317	QSA240S	19124	QSA2400S	49096
QSA2401S	49097	QSA241S	19125	QSA2518S	49042
QSA267S	19147	QSA268S	19138	QSA269S	19137
QSA3288S	49140	QSA7002S	19073	QSA7002S	49077
QSA7003S	49076	QSA7003S	19072	QSA7005S	19624
QSA9000S	49982	QSA9010S	49981	QSA9113S	19076
QSA9113S	19431	QSA9113S	19433	QSA9114S	19077
QSA9114S	19432	QSA9114S	19434	QSA9120S	19021
QSA9130S	19020	QSA9137S	49539	QSA9138S	49538
QSA914S	19057	QSA915S	19056	QSA9246S	19461
QSA9247S	19462	QSA9248S	19463	QSA9249S	19464
QSA9375S	49511	QSA9380S	49512	QSA9426S	49130
QSA9427S	49129	QSA9430S	19488	QSA9440S	19487

Die aufgeführten Vergleichsnummern dienen nur zur besseren Identifikation.
References are only specified for a better identification.
Les références mentionées ne servent qu' á une meilleure identification.

QUINTON HAZELL	MAPCO	QUINTON HAZELL	MAPCO	QUINTON HAZELL	MAPCO
QSA950S	19158	QSA951S	19157	QSA9532S	19346
QSA9533S	19347	QSA9650S	19858	QSA990S	19438
QSA9904S	49028	QSA9905S	49029	QSA9908S	19031
QSA9909S	19032	QSA991S	19437	QSA992S	19440
QSA992S	19460	QSA993S	19439	QSA993S	19459
QSA994S	19332	QSA995S	19331	QSA996S	19334
QSA997S	19333	QSA998S	19010	QSA999S	19009
QSJ 1416S	49210	QSJ1000S	19851	QSJ1001S	19852
QSJ1004S	19983	QSJ1009S	19352	QSJ1010S	19351
QSJ1012S	19743/1	QSJ1013S	19744/1	QSJ1018S	19045
QSJ1030S	19419	QSJ1033S	19422	QSJ1040S	19318
QSJ1040S	19314	QSJ1041S	19313	QSJ1041S	19317
QSJ1049S	19132	QSJ1055S	19618	QSJ1056S	19617
QSJ1057S	59333	QSJ1058S	19749	QSJ1059S	19951
QSJ1061S	19041	QSJ1085S	19060	QSJ1089S	59331
QSJ1090S	59330	QSJ1099S	19503	QSJ1111S	19091
QSJ1116S	19582	QSJ1118S	19587	QSJ1124S	49578
QSJ1125S	19551	QSJ1126S	19552	QSJ1131S	59323
QSJ1134S	19561	QSJ1134S	19568	QSJ1135S	19562
QSJ1135S	19569	QSJ1141S	19889/1	QSJ1141S	19889
QSJ1142S	19909	QSJ1143S	19907	QSJ1146S	19955
QSJ1147S	19949	QSJ1148S	19954	QSJ1155S	19747/1
QSJ1156S	19746/1	QSJ1157S	19754	QSJ1158S	49050
QSJ1159S	19008	QSJ1162S	19898	QSJ1163S	19897
QSJ1164S	19680	QSJ1165S	19681	QSJ1179S	49661
QSJ1180S	49662	QSJ1181S	49678	QSJ1182S	49679
QSJ1201S	19071	QSJ1206S	59290	QSJ1214S	19832
QSJ1216S	49896	QSJ1217S	49897	QSJ1219S	59223
QSJ1227S	59346	QSJ1228S	19428	QSJ1232S	19064
QSJ1233S	59297	QSJ1235S	49565	QSJ1237S	59565
QSJ1238S	59563	QSJ1241S	59236	QSJ1243S	59318
QSJ1251S	19698	QSJ1252S	19699	QSJ1264S	49556
QSJ1265S	59521	QSJ1266S	19737/1	QSJ1267S	19738/1
QSJ1269S	19679/1	QSJ1269S	19679	QSJ1281S	19469
QSJ1282S	19468	QSJ1294S	19426	QSJ1298S	19319
QSJ1299S	19320	QSJ1300S	19751	QSJ1303S	19868
QSJ1304S	19869	QSJ1305S	19962	QSJ1306S	49745
QSJ1307S	49744	QSJ1308S	49649	QSJ1313S	19513
QSJ1314S	59213	QSJ1315S	59212	QSJ1315S	59218
QSJ1316S	19511	QSJ1317S	49012	QSJ1321S	49616
QSJ1328S	19980	QSJ1330S	19765	QSJ1333S	49941
QSJ1333S	49940	QSJ1334S	19524	QSJ1335S	19522
QSJ1335S	59522	QSJ1336S	19537	QSJ1337S	59523
QSJ1338S	19143	QSJ1343S	19694	QSJ1344S	19695
QSJ1345S	19684	QSJ1346S	19685	QSJ1350S	19759
QSJ1351S	19507	QSJ1352S	49802	QSJ1353S	19912
QSJ1354S	19801	QSJ1413S	19896	QSJ1413S	19896/1
QSJ1414S	19895/1	QSJ1414S	19895	QSJ1416S	19585
QSJ1418S	19807	QSJ1419S	19806	QSJ1420S	19809

Die aufgeführten Vergleichsnummern dienen nur zur besseren Identifikation.
References are only specified for a better identification.
Les références mentionées ne servent qu' á une meilleure identification.

QUINTON HAZELL	MAPCO	QUINTON HAZELL	MAPCO	QUINTON HAZELL	MAPCO
QSJ1421S	19808	QSJ1475S	49694	QSJ1476S	49695
QSJ1477S	49650	QSJ1478S	49651	QSJ1479S	59619
QSJ1480S	59620	QSJ1481S	49723	QSJ1482S	49724
QSJ1490S	19763	QSJ1495S	19449	QSJ1496S	19450
QSJ1496S	19499	QSJ1506S	49139	QSJ1517S	49861
QSJ1518S	19621	QSJ1520S	19571	QSJ1520S	19563
QSJ1560S	49891	QSJ1583S	49709OES	QSJ1584S	49708OES
QSJ1588S	49710OES	QSJ1597S	49825	QSJ1600S	19427
QSJ1603S	49703/1	QSJ1603S	49703	QSJ1604S	49702/1
QSJ1604S	49702	QSJ1646S	19109/2	QSJ1657S	19636
QSJ1658S	19635	QSJ1664S	19632	QSJ1674S	49713OES
QSJ1680S	49680OES	QSJ1681S	49681OES	QSJ1682S	49727
QSJ1683S	49728	QSJ1684S	59617	QSJ1685S	59618
QSJ1704S	49791OES	QSJ1705S	49792OES	QSJ1706S	49859
QSJ1720S	49526	QSJ1721S	49527	QSJ1766S	51531
QSJ1799S	59210	QSJ1802S	59598	QSJ1803S	59599
QSJ1807S	59234	QSJ1808S	59566	QSJ1809S	49552
QSJ1850S	49203	QSJ1851S	49204	QSJ1875S	49156
QSJ1878S	59520	QSJ1879S	19653	QSJ1903S	59580
QSJ1912S	59260	QSJ1913S	49060	QSJ1914S	49061
QSJ1919S	51710OES	QSJ1921S	49111	QSJ2013S	19844
QSJ2042S	19358	QSJ2043S	19359	QSJ2054S	51835
QSJ2055S	51836	QSJ2056S	51837	QSJ2057S	51838
QSJ2086S	19842	QSJ2087S	19843	QSJ2095S	49839
QSJ2099S	59646	QSJ2100S	19518	QSJ2110S	51834
QSJ2110S	51847	QSJ2111S	59878	QSJ2112S	59874
QSJ2113S	59876	QSJ2114S	59877	QSJ236S	51800
QSJ2366S	19981	QSJ237S	51801	QSJ263S	19204
QSJ264S	19881	QSJ3009S	59898	QSJ3237S	49924
QSJ3238S	59832	QSJ3242S	59668	QSJ3243S	59673
QSJ3246S	49242	QSJ3247S	49241	QSJ3248S	59398
QSJ3249S	59399	QSJ3250S	49243	QSJ3251S	49244
QSJ3254S	49546	QSJ3255S	49547	QSJ3256S	19372
QSJ3258S	49983	QSJ3259S	49984	QSJ3266S	19984
QSJ3267S	19985	QSJ3268S	59810	QSJ3269S	59811
QSJ3270S	59562	QSJ3271S	49610	QSJ3272S	49110
QSJ3273S	59643	QSJ3276S	51661	QSJ3277S	51662
QSJ3278S	51660	QSJ3279S	19491	QSJ3281S	49069
QSJ3281S	49038	QSJ3289S	59606	QSJ3290S	59607
QSJ3291S	59608	QSJ3292S	59609	QSJ3293S	59602
QSJ3295S	51724	QSJ3296S	51725	QSJ3297S	59885
QSJ3298S	59884	QSJ3299S	59881	QSJ3300S	59882
QSJ3301S	59902	QSJ3306S	51721	QSJ3307S	59611
QSJ3308S	59612	QSJ3310S	49655	QSJ3311S	49656
QSJ3316S	49309	QSJ3324S	19498	QSJ3354S	51300
QSJ3372S	51388	QSJ3373S	51389	QSJ3386S	51648
QSJ3387S	51649	QSJ3392S	51688	QSJ3398S	52718
QSJ3399S	51652	QSJ3401S	51651	QSJ3442S	51737
QSJ3454S	51239	QSJ5004K	59826/1	QSJ527S	49648

Die aufgeführten Vergleichsnummern dienen nur zur besseren Identifikation.
References are only specified for a better identification.
Les références mentionées ne servent qu' á une meilleure identification.

QUINTON HAZELL	MAPCO	QUINTON HAZELL	MAPCO	QUINTON HAZELL	MAPCO
QSJ651S	19102	QSJ694S	19717	QSJ7000S	19666/2
QSJ7000S	19666/1	QSJ7000S	19666HPS	QSJ7001S	19665
QSJ706S	19856	QSJ719S	19875	QSJ767S	19085
QSJ768S	19084	QSJ773S	19025	QSJ792S	19111
QSJ793S	19876	QSJ794S	19721	QSJ798S	19854
QSJ812S	19816	QSJ813S	19112	QSJ814S	19857
QSJ839AS	19048	QSJ839S	19044	QSJ858S	19901
QSJ859S	19902	QSJ874S	19802	QSJ874S	19612
QSJ876S	59682	QSJ877S	19714	QSJ881S	59683
QSJ885S	19109	QSJ886S	19115	QSJ887S	19116
QSJ888S	19123	QSJ889S	19122	QSJ892S	19307
QSJ897S	19725	QSJ908S	59224	QSJ9098S	19441
QSJ9099S	19442	QSJ911S	19535	QSJ9136S	19526
QSJ9146S	19536	QSJ9166S	59568	QSJ9167S	59564
QSJ9181S	59235	QSJ9188S	59569	QSJ9189S	59261
QSJ9198S	49510	QSJ9209S	49589	QSJ9214S	51534
QSJ9215S	51535	QSJ9217S	51540	QSJ9218S	51537
QSJ9286S	19553	QSJ9287S	19554	QSJ9288S	19555
QSJ9309S	49014	QSJ9315S	49595	QSJ9321S	59326
QSJ9324S	49560	QSJ9342S	59585	QSJ9347S	19519
QSJ9357S	49116	QSJ940S	59325	QSJ9424S	19425
QSJ950S	19542	QSJ952S	59334	QSJ9534S	19371
QSJ9536S	19389	QSJ9537S	19473	QSJ965S	19408
QSJ967S	51383	QSJ971S	19828	QSJ972S	19415
QSJ972S	19312	QSJ973S	19311	QSJ974S	19310
QSJ975S	19135	QSJ976S	19127	QSJ977S	19128
QSJ978S	49105	QSJ979S	49106	QSJ980S	19883
QSJ985S	19421	QSJ986S	19893	QSJ987S	19894
QSJ988S	49698	QSJ989S	49699	QSJ9928S	49021
QSJ9931S	49255	QSJ994S	19673	QSJ995S	19674
QSJ996S	19879/1	QSJ996S	19879	QSJ9968S	49831
QSJ997S	19662	QSJ998S	19661	QSJ999S	19884
QSK214S	33611	QSK214S	33610	QSK220S	33627
QSK227S	33870	QSK237S	33875	QSK238S	33875/1
QSK241S	33933	QSK241S	33933/2	QSK243S	33841/4
QSK249S	37834	QSK250S	36917	QSK254S	36916
QSK256S	36909	QSRP1004	49966	QWB9008	34053
QWB9010	59846	TSA208RK	33818/9		

RUVILLE	MAPCO	RUVILLE	MAPCO	RUVILLE	MAPCO
965112	33972	965113	33922	965114	33974
965800	34053	966601	34413	985003	33691
985004	33638	985005	33639	985007	33875
985010	33875/1	985011	33689	985012	33695
985012	33695/2	985013	33690	985013	33690/2
985014	33847	985015	36669/2	985019S	36660
985020	33666	985030	36665	985031	36666
985032	36664	985033	36662	985034	36661
985040	33934	985041	36668/2	985042	33692
985042	33692/2	985043	33693	985043	33693/2

Die aufgeführten Vergleichsnummern dienen nur zur besseren Identifikation.
References are only specified for a better identification.
Les références mentionées ne servent qu' á une meilleure identification.

RUVILLE	MAPCO	RUVILLE	MAPCO	RUVILLE	MAPCO
985044S	33933	985103	33841/4	985108	33970
985112	33841	985114	33889/3	985117	33874
985120	33870	985121	33865	985122	33910
985126	36899	985131	33836	985133	36972
985138	33868	985139	33889/4	985140	33889/4
985141	36908	985144	33867	985145	33936
985148	36916	985149	36909	985150	33973
985154	37838	985160	33943	985161	33944
985162	33838	985162	33837	985165	36911
985173	36910	985175	33946	985201	33611
985202	33616	985203	33617	985204	33618
985205	33615	985206	33677	985207	33609
985208	33628/2	985208	33628	985209	33627
985210	33645	985212	33670	985214	33614
985215	33635	985216	33636	985217	33678
985221	33908	985222	33676	985225	33643
985226	33644	985232	33675	985301	33785
985302	33786	985303	33714/9	985304	33730
985305	33729	985306	33736	985307	33734
985308	33732	985310	33715	985312	33757
985313	33714	985314	33740	985315	33716
985316	33879	985321	33739	985322	33725
985323	33733	985324	33752	985329	33848
985330	33731	985331	33735	985332	33877
985334	33794	985335	33849	985337	33895
985352	33737	985353	33787	985354	33758
985355	33756	985355	33753	985357	33766
985359	33789	985361	33761	985363	33755
985364	33760	985365	33762	985372	33795
985400	33818/9	985401	33929	985402	33859
985404	33871	985405	33858	985406	33900
985407	33896	985408	33897	985410	33828
985411	33818	985412	33818	985412	33820
985414	33906	985415	33826	985415S	33826/4
985416	33904	985417	33844	985421	33827
985422	33830	985423	33819	985424	33833
985424S	33833/2	985425	33903	985426	33912
985427	33876	985429	33932	985430	33840
985431	33839	985432	33907	985438	33835
985439	33834	985440	33937	985441	33909
985443	33872	985444	33916	985446	36852
985447	33935	985448	33948	985449	33949
985450	36914	985455	33893	985460	36950
985461	36948	985462	36949	985464	33987
985501	33146	985503	33129	985504	33130
985508	33170	985509	33171	985510	33148
985511	33100	985512	33144	985513	33143
985514	33145	985515	33118	985517	33105
985520	33147	985521	33167	985701	33892

Die aufgeführten Vergleichsnummern dienen nur zur besseren Identifikation.
References are only specified for a better identification.
Les références mentionées ne servent qu' á une meilleure identification.

RUVILLE	MAPCO	RUVILLE	MAPCO	RUVILLE	MAPCO
985702	33899	985703	33898	985704	33891
985705	33901	985706	33878	985707	36941
985710	33842	985711	36904	985712	33938
985714	33829	985715	33939	985716	33940
985717	33902	985718	33894	985720	33808
985806	33002	985807	33003	985811	33019
985814	33035	985821	33017	985825	33018
985826	33047	985845	33005	985854	33040
985855	33039	985861	33069	985903	33338
985904	33321	985905	33307	985906	33306
985907	33320	985909	33788	985910	33322
985911	33420	985912	33313	985913	33323
985921	33417	985921	33416	985923	33424
985928	33319	985929	33318	985935	33316
985936	33317	986017	33010	986101	33960
986505	33923	986601	33314	986601	33414
986609	33403	986611	33423	986806	33505
986808	33501	986809	33502	986811	33506
986811	33500	986901	33564	986911	33563
987001	33535	987301	33510	987800	33950
987802	19994	987803	36780	987804	36781

TRW	MAPCO	TRW	MAPCO	TRW	MAPCO
JTS552	59021	ES 2827	19580	ES 3071	19594
JAR1000	59307	JAR1027	59770	JAR1030	49161
JAR106	49837	JAR107	49833	JAR1075	49314
JAR108	19068	JAR109	19079	JAR111	19452
JAR112	19069	JAR113	19022/1	JAR113	19022
JAR114	19644	JAR116	19650	JAR117	49642
JAR118	49643	JAR121	19647	JAR123	19805
JAR124	49754	JAR125	49755	JAR127	49607
JAR128	19627	JAR129	19628	JAR131	59246
JAR134	19506	JAR137	49894	JAR140	19541
JAR142	19550	JAR146	19521	JAR158	49944
JAR159	49900	JAR160	49917	JAR161	19043
JAR163	19723	JAR170	19588	JAR172	19353
JAR173	19373	JAR174	19152	JAR177	19149
JAR178	19156/1	JAR179	19193	JAR183	59265
JAR184	49288	JAR188	19564	JAR189	19565
JAR190	59263	JAR191	49942	JAR192	19891/1
JAR193	19887	JAR196	49952	JAR205	19654
JAR207	19183	JAR210	59266	JAR213	49644
JAR213	19740	JAR218	49807	JAR223	19412
JAR224	19325/1	JAR224	19324/1	JAR225	19324
JAR226	19409	JAR227	19323	JAR228	19103
JAR233	49918	JAR495	19410	JAR495	19446/1
JAR498	19482	JAR499	19448	JAR501	19023
JAR501	19023/1	JAR507	19696/1	JAR509	19336/1
JAR511	19411	JAR511	19443	JAR544	19017
JAR544	19016	JAR547	19722	JAR551	49910

Die aufgeführten Vergleichsnummern dienen nur zur besseren Identifikation.
References are only specified for a better identification.
Les références mentionées ne servent qu' á une meilleure identification.

TRW	MAPCO	TRW	MAPCO	TRW	MAPCO
JAR560	19502	JAR561	19018	JAR562	59570
JAR564	59536	JAR565	19174	JAR565	49102
JAR640	49053	JAR642	49750	JAR642	49752
JAR643	49753	JAR643	49751	JAR644	49043
JAR645	19024	JAR646	19479	JAR647	49400
JAR648	19484	JAR649	59844	JAR650	19379
JAR652	49126	JAR654	19171	JAR655	49119
JAR7528	51382	JAR7529	51390	JAR7544	51344
JAR7564	59572	JAR7569	51251	JAR7600	59555
JAR915	19973	JAR924	49738	JAR928	49690/1
JAR929	49159	JAR930	49737	JAR934	19584
JAR937	52719	JAR939	51723	JAR950	49117/1
JAR951	19182	JAR953	49964	JAR965	51653
JAR974	19676	JAR981	51722	JAR982	49746
JAR983	19493	JAR984	51117/1	JAR990	49155
JAR991	19810	JAR994	51744	JAR998	59557
JBJ100	19621	JBJ109	19060	JBJ113	49703
JBJ113	49703/1	JBJ114	19893	JBJ115	19681
JBJ117	19684	JBJ118	19685	JBJ119	19662
JBJ120	19661	JBJ121	19665	JBJ122	19666HPS
JBJ125	19425	JBJ126	19427	JBJ127	19426
JBJ128	19868	JBJ129	19428	JBJ130	19419
JBJ131	19415	JBJ131	19312	JBJ135	19408
JBJ137	19085	JBJ138	19721	JBJ141	19725
JBJ142	49861	JBJ143	19754	JBJ144	19759
JBJ145	19763	JBJ146	19714	JBJ149	19801
JBJ150	19802	JBJ150	19612	JBJ151	19632
JBJ152	19507	JBJ153	49510	JBJ153	19503
JBJ154	49255	JBJ155	19513	JBJ156	19091
JBJ159	19044	JBJ160	49014	JBJ163	19587
JBJ164	19844	JBJ165	19828	JBJ166	49891
JBJ167	49825	JBJ173	59224	JBJ174	49578
JBJ175	19554	JBJ176	19555	JBJ177	19526
JBJ178	59325	JBJ181	59522	JBJ182	19524
JBJ186	19421	JBJ187	19422	JBJ188	19307
JBJ190	19319	JBJ191	19135	JBJ192	49106
JBJ194	19143	JBJ195	19112	JBJ196	19115
JBJ197	19109	JBJ198	19128	JBJ199	19122
JBJ200	19123	JBJ202	19132	JBJ204	59333
JBJ205	19949	JBJ206	19954	JBJ207	19955
JBJ210	19889	JBJ210	19690	JBJ211	19962
JBJ212	49560	JBJ215	59565	JBJ218	59563
JBJ219	19569	JBJ219	19562	JBJ221	59323
JBJ223	19568	JBJ223	19561	JBJ226	19907
JBJ228	19901	JBJ230	19909	JBJ231	19912
JBJ232	19884	JBJ234	19875	JBJ235	19876
JBJ236	19879	JBJ237	19679	JBJ237	19679/1
JBJ244	19896/1	JBJ245	19869	JBJ248	19857
JBJ249	19894	JBJ250	19084	JBJ251	19980

Die aufgeführten Vergleichsnummern dienen nur zur besseren Identifikation.
References are only specified for a better identification.
Les références mentionées ne servent qu' á une meilleure identification.

TRW	MAPCO	TRW	MAPCO	TRW	MAPCO
JBJ252	19983	JBJ255	49050	JBJ259	19102
JBJ260	49105	JBJ261	19111	JBJ262	19116
JBJ263	19127	JBJ265	19883	JBJ266	19851
JBJ267	19881	JBJ269	19951	JBJ275	49744
JBJ276	19359	JBJ277	19449	JBJ278	19450
JBJ287	49255	JBJ289	59297	JBJ290	49556
JBJ298	19902	JBJ303	19751	JBJ308	49802
JBJ317	59324	JBJ320	49745	JBJ324	19749
JBJ327	59520	JBJ328	59335	JBJ332	59569
JBJ339	49248	JBJ358	59235	JBJ359	59236
JBJ360	49247	JBJ368	49831	JBJ369	19535
JBJ374	19511	JBJ377	49702/1	JBJ377	49702
JBJ382	19008	JBJ600	19680	JBJ604	19204
JBJ609	19358	JBJ649	19897	JBJ650	19816
JBJ651	19617	JBJ652	19618	JBJ653	51800
JBJ654	51801	JBJ655	19852	JBJ660	19585
JBJ661	49859	JBJ662	59898	JBJ663	19898
JBJ666	19582	JBJ680	19551	JBJ682	19563
JBJ682	19571	JBJ687	19553	JBJ701	19372
JBJ704	19491	JBJ705	49610	JBJ706	19389
JBJ707	19473	JBJ711	59671	JBJ712	59622
JBJ717	19499	JBJ718	19498	JBJ720	49924
JBJ723	51283	JBJ729	49070	JBJ729	49069
JBJ741	49099	JBJ749	51721	JBJ751	51724
JBJ752	51725	JBJ753	19765	JBJ7532	51388
JBJ7533	51389	JBJ7561	51300	JBJ760	49156
JBJ779	51624	JBJ804	52812	JBJ813	49162
JBJ814	49163	JBU106	33035	JBU107	33019
JBU116	33417	JBU124	33794	JBU142	33437
JBU144	33414	JBU146	33101	JBU149	33102
JBU152	33416	JBU157	33793	JBU159	33002
JBU167	33870	JBU167	59864	JBU261	33820
JBU390	36663	JBU453	33001	JBU454	33006
JBU456	33018	JBU461	33011	JBU464	19433
JBU465	33017	JBU479	33646	JBU505	33768
JBU616	37833	JBU617	37832	JBU623	37836
JBU626	36703	JBU627	36689	JBU630	33434
JBU643	36778	JBU650	33049	JBU651	33048
JCY104	59624	JCY106	49801	JCY108	59862
JLS100	19481	JRA 153	49866/1	JRA 292	49866/2
JRA131	49789	JRA132	49790	JRA137	49721
JRA138	49722	JRA141	49781	JRA142	49785
JRA151	49898	JRA152	49899	JRA154	19813
JRA155	19812	JRA156	49783	JRA157	19675
JRA158	49780	JRA159	49782	JRA165	19830/1
JRA167	19829	JRA168	19837	JRA169	19825
JRA181	19340/1	JRA183	19325	JRA184	19326
JRA194	19121	JRA194	19106	JRA198	19107
JRA199	49107	JRA199	19166	JRA200	19198

Die aufgeführten Vergleichsnummern dienen nur zur besseren Identifikation.
References are only specified for a better identification.
Les références mentionées ne servent qu' á une meilleure identification.

TRW	MAPCO	TRW	MAPCO	TRW	MAPCO
JRA200	19126	JRA203	19160	JRA204	19159
JRA205	19150	JRA206	19151	JRA207	19175
JRA208	19176	JRA209	19156	JRA210	19161
JRA211	19153	JRA212	19154	JRA214	19804/1
JRA215	19892	JRA217	49878	JRA218	49763
JRA219	19860	JRA220	19861	JRA221	49873
JRA222	49672	JRA224	19865	JRA225	49874
JRA226	49673	JRA230	49692	JRA231	49693
JRA241	49766	JRA242	49773	JRA245	49767
JRA246	49774	JRA251	19899	JRA252	19872
JRA253	19682	JRA254	19683	JRA255	49674
JRA258	49675	JRA263	49761	JRA264	49762
JRA272	19863	JRA275	19803/1	JRA293	19888
JRA296	49869	JRA297	49870	JRA301	19822
JRA328	19784	JRA331	19785	JRA355	19405
JRA360	19129/1	JRA360	19129	JRA364	49866
JRA366	19871	JRA367	19831/1	JRA368	19862
JRA372	19864	JRA386	49532	JRA444	51805
JRA447	51806	JRA500	49732	JRA529	51655
JRA530	51656	JRA541	52811	JRA548	49674/1
JRA560	51665	JRA561	51666	JRA566	51745
JRA567	51746	JRR7001	33676	JTC 974	19383
JTC 975	19384	JTC100	19048	JTC101	19021
JTC1012	49085	JTC1013	49084	JTC1014	49087
JTC1015	49086	JTC1016	49132	JTC1017	49131
JTC1023	51871	JTC1024	51870	JTC1028	51648
JTC1029	51649	JTC1030	51634	JTC1031	51635
JTC1036	51737	JTC1039	51738	JTC104	49028
JTC1040	51739	JTC105	49029	JTC1058	52715
JTC1059	52716	JTC1060	52714	JTC1071	51647
JTC1089	52710	JTC1090	51874	JTC1091	51875
JTC1106	49083	JTC1107	49082	JTC112	49713OES
JTC1121	59636	JTC1122	59635	JTC1136	51876
JTC1137	51877	JTC1138	51878	JTC1139	51879
JTC1162	59877	JTC1163	59359	JTC1164	59358
JTC1164	49152	JTC117	49705	JTC1170	52780
JTC118	49706	JTC118	49706/1	JTC119	49681OES
JTC1209	51652	JTC1210	51651	JTC1211	51650
JTC1228	49318	JTC1229	49319	JTC1234	49310
JTC1235	49311	JTC1236	49320	JTC1237	49321
JTC124	49678	JTC1244	51603	JTC1245	51602
JTC1248	51727	JTC1249	51726	JTC125	49679
JTC126	49650	JTC127	49651	JTC128	49694
JTC129	49695	JTC1290	59668	JTC130	49723
JTC1302	59019	JTC1303	59018	JTC131	49724
JTC1313	51872	JTC1314	51873	JTC138	49733
JTC139	49734	JTC142	49661	JTC143	49662
JTC144	19670HPS	JTC145	19671HPS	JTC147	19025
JTC150	19054	JTC151	19055	JTC152	19056

Die aufgeführten Vergleichsnummern dienen nur zur besseren Identifikation.
References are only specified for a better identification.
Les références mentionées ne servent qu' á une meilleure identification.

TRW	MAPCO	TRW	MAPCO	TRW	MAPCO
JTC153	19057	JTC160	19643	JTC161	19642
JTC162	19643/1	JTC163	19642/1	JTC164	19769
JTC165	19768	JTC166	19702	JTC167	19702/1
JTC168	19701	JTC169	19701/1	JTC177	19756/1
JTC181	19756/2	JTC182	19756/3	JTC183	19755/2
JTC184	19755/3	JTC186	19755/1	JTC187	19761
JTC188	19760	JTC189	19809	JTC190	19808
JTC191	19806	JTC192	19807	JTC193	19623
JTC194	19622	JTC195	19635	JTC196	19636
JTC197	19634	JTC198	49756	JTC199	49757
JTC200	19619	JTC201	19620	JTC212	49817
JTC213	49818	JTC214	49819	JTC215	49820
JTC218	49821	JTC219	49822	JTC222	49815
JTC223	49816	JTC224	49539	JTC225	49521
JTC226	49520	JTC227	49522	JTC228	49523
JTC231	59331	JTC232	59330	JTC239	19041
JTC242	19064	JTC249	49595	JTC252	49698
JTC253	49699	JTC254	19694	JTC255	19695
JTC258	19673	JTC259	19674	JTC260	19349
JTC261	19438	JTC262	19454	JTC264	19310
JTC265	19311	JTC266	19350	JTC268	19474
JTC269	19459	JTC269	19439	JTC271	19321
JTC272	19322	JTC275	19472	JTC276	19471
JTC277	19073	JTC278	19066	JTC279	19067
JTC280	19045	JTC281	19072	JTC282	19050
JTC283	19051	JTC284	19738/1	JTC285	19737/1
JTC287	19747/1	JTC288	19746/1	JTC289	19842
JTC290	19843	JTC291	49896	JTC292	49897
JTC294	19351	JTC296	19317	JTC296	19313
JTC303	19352	JTC305	19314	JTC305	19318
JTC308	19475/1	JTC309	19344	JTC310	19346
JTC311	19345	JTC312	19347	JTC320	19124
JTC321	19125	JTC322	19163	JTC323	19162
JTC324	19137	JTC325	19138	JTC326	19186
JTC327	19187	JTC328	19157	JTC329	19158
JTC330	19167	JTC331	19168	JTC332	19147
JTC333	19148	JTC334	49129	JTC335	49130
JTC340	19870	JTC340	19870/1	JTC340	19870/2
JTC342	49704	JTC342	49704/1	JTC342	49704/2
JTC343	49710OES	JTC345	49791OES	JTC346	49792OES
JTC348	49708OES	JTC350	49709OES	JTC352	19686/1
JTC354	19854	JTC357	49769	JTC357	49769/1
JTC358	49768	JTC359	49770	JTC359	49770/1
JTC370	19442	JTC371	19469	JTC374	19071
JTC375	19009	JTC376	19010	JTC377	49022
JTC378	49023	JTC379	49024	JTC380	49025
JTC389	19031	JTC390	19032	JTC396	19462
JTC397	19463	JTC398	19464	JTC401	19431
JTC401	19076	JTC402	19432	JTC402	19434

Die aufgeführten Vergleichsnummern dienen nur zur besseren Identifikation.
References are only specified for a better identification.
Les références mentionées ne servent qu' á une meilleure identification.

TRW	MAPCO	TRW	MAPCO	TRW	MAPCO
JTC402	19077	JTC404	19196	JTC405	19197
JTC413	59212	JTC420	49538	JTC421	49680OES
JTC443	19020	JTC445	19327	JTC447	19330
JTC717	51550	JTC7541	51287	JTC7542	51286
JTC7569	51285	JTC7570	51284	JTC817	19441
JTC819	19468	JTC821	19440	JTC823	19633
JTC824	19453	JTC898	19652	JTC899	19651
JTC911	19177	JTC912	19178	JTC913	19691
JTC913	19690/1	JTC914	49502	JTC915	49503
JTC916	49913	JTC917	49912	JTC918	49012
JTC919	49027	JTC920	49026	JTC922	19820
JTC924	49728	JTC925	49727	JTC926	19630
JTC927	19629	JTC930	19743/1	JTC931	19744/1
JTC932	49067	JTC933	49068	JTC934	49080
JTC935	49081	JTC936	51710OES	JTC938	49775
JTC939	49776	JTC940	59813	JTC945	19971
JTC946	19972	JTC947	49664	JTC948	49665
JTC949	49301	JTC950	49302	JTC951	49041
JTC952	49042	JTC953	49044	JTC954	49045
JTC957	19390	JTC958	19391	JTC959	19485
JTC963	49652	JTC964	59619	JTC965	59620
JTC966	59644	JTC967	59645	JTC968	59884
JTC969	59885	JTC972	49608	JTC973	49609
JTC980	51730	JTC987	49506	JTC988	59651
JTC989	59650	JTC997	49889	JTC998	49888
JTC998	59878	JTC999	49890	JTE0121	49881
JTE1004	51840	JTE1005	51841	JTE1007	59669
JTE1008	59670	JTE101	19668	JTE1023	59707OES
JTE1034	19099	JTE1035	59676	JTE1036	49098
JTE1045	19492	JTE1050	51667	JTE1051	51668
JTE1052	51826	JTE1053	51827	JTE1054	51740
JTE1055	51741	JTE1062	52809	JTE1071	49965
JTE1072	49966	JTE1075	51719	JTE1076	51720
JTE1087	59013	JTE109	19840	JTE1090	51742
JTE1091	51743	JTE1095	51735	JTE110	51850
JTE1102	51668	JTE1113	49157	JTE1114	49158
JTE1115	59012	JTE112	19545	JTE1120	49057
JTE1121	49058	JTE1139	19423	JTE1140	19497
JTE1141	19496	JTE1142	51684	JTE1198	49306
JTE125	49882	JTE126	19741	JTE126	19742
JTE126	49883	JTE128	49646	JTE128	49645
JTE129	59296	JTE132	19827	JTE132	19824
JTE134	19030	JTE135	19059	JTE135	19007
JTE137	19692	JTE138	19693	JTE139	19850
JTE141	49717	JTE142	49718	JTE143	49707HPS
JTE143	49707OES	JTE144	19890	JTE145	49739
JTE146	49740	JTE147	19782	JTE148	19783
JTE150	19660	JTE151	19663	JTE152	19664
JTE153	49735	JTE154	49736	JTE156	19669

Die aufgeführten Vergleichsnummern dienen nur zur besseren Identifikation.
References are only specified for a better identification.
Les références mentionées ne servent qu' á une meilleure identification.

TRW	MAPCO	TRW	MAPCO	TRW	MAPCO
JTE162	19417	JTE163	19418	JTE164	19413
JTE165	19414	JTE166	19301	JTE166	19336
JTE168	49836	JTE169	49830	JTE170	19065
JTE175	19013	JTE177	19040	JTE180	19070
JTE182	19052	JTE183	19058	JTE185	19420
JTE186	19014	JTE187	19053	JTE188	19750
JTE189	19641	JTE190	19640	JTE191	19645
JTE191	19646	JTE192	49641	JTE193	49640
JTE194	19649	JTE195	19648	JTE198	19736
JTE199	19735	JTE200	19745	JTE201	19753
JTE202	19752	JTE203	19757	JTE204	19758
JTE205	59657	JTE206	59665	JTE207	19727
JTE209	19613	JTE211	19800	JTE213	19638
JTE216	19710	JTE217	19711	JTE219	19719
JTE220	19718	JTE222	19610	JTE224	59319
JTE226	19501	JTE228	19500	JTE228	19508
JTE229	19512	JTE231	19089	JTE232	19090
JTE237	19047	JTE237	19042	JTE238	59681
JTE239	59680	JTE241	19583	JTE244	49800
JTE245	19841	JTE246	49823	JTE247	49824
JTE248	49805	JTE249	49806	JTE252	19846
JTE255	19826	JTE260	19547	JTE260	19540
JTE261	19546	JTE262	19556	JTE263	19525
JTE266	59255	JTE267	19520	JTE267	59257
JTE268	19523	JTE274	19315	JTE275	19316
JTE276	19342	JTE277	19341	JTE278	49104
JTE279	19144	JTE280	19145	JTE281	49100
JTE282	49101	JTE283	19139	JTE284	19140
JTE285	19142	JTE286	19141	JTE287	19130
JTE288	19130/1	JTE292	19180	JTE292	19169
JTE293	19170	JTE293	19181	JTE294	19105
JTE295	19131	JTE296	19133	JTE297	19134
JTE300	19108	JTE305	19956	JTE306	19504
JTE307	19505	JTE309	19626	JTE310	19611
JTE314	19961	JTE315	49558	JTE316	49557
JTE317	59201	JTE319	19560	JTE322	59275
JTE323	59279	JTE324	59281	JTE325	59277
JTE330	59274	JTE335	19614	JTE336	49758
JTE337	49759	JTE339	19911	JTE341	19910
JTE346	19880	JTE349	59895	JTE350	59896
JTE356	49871	JTE357	49872	JTE358	19859
JTE359	19866	JTE360	19873	JTE361	19867
JTE362	19882	JTE365	49857	JTE366	49858
JTE371	19849	JTE388	19834	JTE390	19533
JTE392	19833	JTE393	19534	JTE394	19874
JTE397	19848	JTE406	19615	JTE411	19616
JTE418	49743	JTE419	49742	JTE426	19906
JTE427	19908	JTE433	19046	JTE436	49017
JTE437	49018	JTE447	19136	JTE450	19430

Die aufgeführten Vergleichsnummern dienen nur zur besseren Identifikation.
References are only specified for a better identification.
Les références mentionées ne servent qu' á une meilleure identification.

TRW	MAPCO	TRW	MAPCO	TRW	MAPCO
JTE451	19080	JTE457	49700	JTE458	49701
JTE461	19356	JTE462	19357	JTE463	19447
JTE469	59282	JTE469	59278	JTE470	59238
JTE490	49562	JTE492	59320	JTE496	19748
JTE502	19510	JTE503	49256	JTE507	49554
JTE508	51711	JTE509	51712	JTE517	59310
JTE523	19847	JTE527	19981	JTE535	19982
JTE541	59816	JTE542	19598	JTE545	19597
JTE551	19509	JTE562	19029	JTE572	59225
JTE590	19836	JTE700	19190	JTE701	19189
JTE703	49600	JTE707	19549	JTE718	59527
JTE721	19631	JTE722	59221	JTE724	51581
JTE728	49601	JTE7552	51381	JTE7553	51380
JTE756	59806	JTE758	19093	JTE7583	51343
JTE7584	51342	JTE7585	51341	JTE7586	51340
JTE759	19092	JTE761	49040	JTE7614	51298
JTE7615	51299	JTE762	19489	JTE7621	51250
JTE763	19490	JTE764	19477	JTE765	19478
JTE766	49653	JTE767	49654	JTE768	59672
JTE769	59840	JTE770	59841	JTE771	19637
JTE774	49135	JTE775	49136	JTE779	19885
JTE780	19886	JTE925	59211	JTE986	49143
JTE996	59295	JTF207	19015	JTF210	59815
JTF211	59814	JTS 147	19603HPS	JTS100	49047
JTS101	49048	JTS104	49030HPS	JTS105	49688
JTS106	49689	JTS109	49795HPS	JTS111	49725
JTS111	49725HPS	JTS112	49726	JTS112	49726HPS
JTS114	19600HPS	JTS115	19607	JTS116	19817
JTS116	19818	JTS118	19527HPS	JTS121	19914HPS
JTS122	49714	JTS124	19667HPS	JTS125	19337HPS
JTS126	19339HPS	JTS128	19470	JTS130	19605HPS
JTS131	19602HPS	JTS132	19606HPS	JTS133	49826
JTS134	49827	JTS136	19367	JTS137	19338HPS
JTS139	19365	JTS140	19164	JTS140	19164HPS
JTS141	19698	JTS142	19699	JTS143	19678HPS
JTS146	49524	JTS157	59226HPS	JTS157	49525HPS
JTS185	49579HPS	JTS194	19590HPS	JTS195	19592HPS
JTS202	19529HPS	JTS218	19516	JTS222	51598
JTS259	19608HPS	JTS260	19853HPS	JTS276	19832
JTS277	33727	JTS278	33726	JTS279	49787
JTS280	49685OES	JTS281	19839	JTS282	19364
JTS283	19348HPS	JTS284	59893	JTS286	49788
JTS287	59847HPS	JTS288	49863	JTS289	19370HPS
JTS290	19369HPS	JTS296	59540HPS	JTS350	49909
JTS352	19026HPS	JTS353	49796	JTS355	49901HPS
JTS358	49729	JTS359	49715	JTS360	49850
JTS361	49683/1OES	JTS361	49682	JTS361	49683OES
JTS362	49684OES	JTS362	49684/1OES	JTS363	19819
JTS364	49856HPS	JTS365	19700HPS	JTS370	19639

Die aufgeführten Vergleichsnummern dienen nur zur besseren Identifikation.
References are only specified for a better identification.
Les références mentionées ne servent qu' á une meilleure identification.

TRW	MAPCO	TRW	MAPCO	TRW	MAPCO
JTS380	49716	JTS381	49834HPS	JTS384	49033
JTS385	49034	JTS386	49031	JTS387	49868
JTS389	59820	JTS390	49686	JTS391	51862
JTS392	51861	JTS398	51821	JTS401	19028HPS
JTS402	49786	JTS403	19362HPS	JTS404	49799
JTS405	19609HPS	JTS405	19604HPS	JTS406	19773HPS
JTS406	19777	JTS407	49895	JTS407	49895HPS
JTS408	19375HPS	JTS409	49120HPS	JTS409	49120
JTS410	49121HPS	JTS410	49121	JTS413	59695
JTS415	59614HPS	JTS416	49906HPS	JTS419	59623HPS
JTS420	59631HPS	JTS421	52713	JTS422	52712
JTS426	59628HPS	JTS428	19774HPS	JTS429	49591HPS
JTS431	59904	JTS433	19120HPS	JTS434	49039HPS
JTS435	51718HPS	JTS436	49146HPS	JTS438	49916HPS
JTS439	49812HPS	JTS440	49811HPS	JTS446	49843
JTS448	49840HPS	JTS449	52801	JTS450	52800
JTS451	59605HPS	JTS452	19476HPS	JTS453	19659HPS
JTS457	19775HPS	JTS462	49749HPS	JTS463	49124HPS
JTS467	49303	JTS471	49305HPS	JTS472	49304HPS
JTS477	59016	JTS478	59017	JTS480	51644
JTS481	51645	JTS483	51825HPS	JTS484	51829HPS
JTS486	51641HPS	JTS487	52805HPS	JTS488	52804HPS
JTS489	59502	JTS490	59503HPS	JTS490	59664HPS
JTS492	49251HPS	JTS496	49905HPS	JTS497	59854
JTS500	19776HPS	JTS501	33632	JTS502	52813
JTS503	52814	JTS508	51639HPS	JTS508	51639
JTS509	51640HPS	JTS510	51659	JTS513	51646
JTS515	51600HPS	JTS519	49253	JTS521	51733
JTS522	51734	JTS526	59251	JTS527	49226HPS
JTS530	49154HPS	JTS531	19543HPS	JTS533	49250HPS
JTS534	49860/1	JTS536	51621	JTS547	59026HPS
JTS551	49046	JTS553	59020	JTS569	59594HPS
JTS570	59341HPS	JTS578	51302	JTS579	51303
JTS7516	49228	JTS7528	51542HPS	JTS7529	51541HPS
JTS7578	51290HPS	JTS7618	19558HPS	JTS7622	51255
JTY105	49731	JTY106	19786	JTY109	19838
JTY112	49658	JTY113	49730	JTY114	49660
JTY118	19845	JTY120	49813	JTY121	49892
JTY122	19821	JTY125	59800	JTY130	49741
JTY194	49760	JTY300	49846	09 DS 4236	19446
10362	19552	11 ES 3095	19823	13 ES 4070	19406
13 ES 4071	19407	14 DS 4151	19644/2	14 DS 4152	19644/1
14 ES 0334	19732	21385	19666/1	30 BJ 6909	19320
30 DS 6294	19335	44 BJ 7154	19889/1	44 BJ 8248	19896
44 BJ 8249	19895	44 DS 8244	19689	44 DS 8245	19688
44 DS 8271	19696	44 DS 8272	19697	44 ES 7139	19877
44 ES7106	19878	44 WP8209F	19858	44 WP8209F	19858/2
49 ES0388	19082	49 ES0390	19081		

Die aufgeführten Vergleichsnummern dienen nur zur besseren Identifikation.
References are only specified for a better identification.
Les références mentionées ne servent qu' á une meilleure identification.

Wichtige Hinweise für unsere Kunden !

Vergleichsnummern dürfen nicht auf Rechnungen aufgeführt werden!

Alle Bilddarstellungen in diesem Katalog sind schematische Darstellungen!

Die Einbaulage ist in Fahrtrichtung gesehen dargestellt.

Beachten Sie unbedingt die Einbauvorschriften der Fahrzeughersteller!

Einbau der Teile ist nur durch geschultes Fachpersonal vorzunehmen!

Irrtümer und Änderungen sind nicht auszuschließen und bitten wir zu entschuldigen.

Wir übernehmen keine Haftung für Irrtümer oder Druckfehler im Katalog!

Es gelten die allgemeinen Geschäftsbedingungen der MAPCO Autotechnik GmbH

© MAPCO Autotechnik GmbH August 2011